BGR RADIATOR

Copper Brass Radiator Catalog 2026

Copper Brass Radiators

BGR Part Number	Height (Decimal Inch)	Height (Fractional Inch)	Width (Decimal Inch)	Width (Fractional Inch)	Page	OEM
ST-0455-2M-EF	14.25	14-1/4"	14.7500	14-3/4"	ST455	
ST-0241-4R-B	14.6250	14-5/8"	22.3750	22-3/8"	ST241	SCAG MOWER, YOUNG 358090
ST-0652-2M-NC	15.2500	15-1/4"	15.7500	15-3/4"	ST625	
ST-0251-3P-B	17.2500	17-1/4"	23.7500	23-3/4"	ST251	INGERSOLL RAND ROLLER
ST-0055-2M-EF	17.6250	17-5/8"	17.2500	17-1/4"	ST55	
ST-0548-4M-F	18.5000	18-1/2"	17.1250	17-1/8"	ST548	
ST-0462-3M-EF	18.6250	18-5/8"	14.7500	14-3/4"	ST462	
ST-0080-2VTW-EF	18.7500	18-3/4"	15.0000		ST80	
ST-0596-3M-NC	19.0000	19"	15.7500	15-3/4"	ST596	
ST-0358-2VTU-NC	19.7500	19-3/4"	17.5000	17-1/2"	ST358	
ST-0282-4I-NC	19.7500	19-3/4"	18.0000		ST282	RADIATOR SPECIALTIES RS-4932,ONAN 186-6708
ST-0070-2VT-EF	19.8750	19-7/8"	17.0000		ST70	
ST-0374-4I-NC	20.0000	20"	18.5000	18-1/2"	ST374	
ST-0020-2SLK-EF	20.0000		21.7500	21-3/4"	ST20	
ST-0604-3M-NC	20.1250	20-1/8"	17.4375	17-7/16"	ST604	
ST-0383-4M-NC	20.1250	20-1/8"	18.1200	18-1/8"	ST383	186-6691, 757-26890,KATOLIGHT SUA81836
ST-0161-4N-NC	20.1875	20-3/16"	14.5000	14-1/2"	ST161	Onan Part Number 130-4683
ST-0645-4M-NC	20.2500	20-1/4"	20.6250	20-5/8"	ST645	
ST-0216-5I-B	20.3750	20-3/8"	18.1250	18-1/8"	ST216	
ST-0311-3VT-NC	20.3750	20-3/8"	19.8750	19-7/8"	ST311	
ST-0625-3M-NC	20.3750	20-3/8"	19.8750	19-7/8"	ST625	GM63648
ST-0280-3T-NC	20.5000	20-1/2"	20.1250	20-1/8	ST280	KOHLER 10 KW
ST-0388-5I-NC	20.7500	20-3/4"	20.6250	20-5/8"	ST388	8045778, 0021114000
ST-0145-6M-F	20.8125	20-13/16"	18.3750	18-3/8"	ST145	Caterpillar 6308 F8
ST-0365-4I-B	21.0000	21"	17.0000	17"	ST365	
ST-0255-4M-NC	21.0000		22.0000		ST255	
ST-0308-3VT-NC	21.1875	21-3/16"	20.1250	20-1/8"	ST308	A-254774
ST-0351-3VT-NC	21.1875	21-3/16"	20.1250	20-1/8"	ST351	KOHLER
ST-0427-4I-B	21.2500	21-1/4"	17.8750	17-7/8"	ST427	120-039, 120-546
ST-0267-3VTM-F	21.4650		23.5800		ST267	GENERAC G097372

ST-0638-4M-NC	21.5000	21-1/2"	18.1250	18-1/8"	ST638	
ST-0083-3T-NC	21.5625	21-9/16"	20.2500	20-1/4"	ST83	KUBOTA
ST-0316-3M-RB	21.8750	21-7/8"	20.1250	20-1/8"	ST316	
ST-0372-3M-RB	21.8750	21-7/8"	20.1250	20-1/8"	ST372	
ST-0518-3M-B	22"	22"	19"	19"	ST518	SUA73454 ENGINE S4L MITSUBISHI
ST-0648-4M-NC	22.5000	22-1/2"	20.0000	20"	ST648	RS-4397 REV A
ST-0220-4VT-B	22.5625	22-9/16	19.7680		ST220	JOHN DEERE
ST-0307-3M-NC	22.5800		21.2500	21-1/4"	ST307	RADIATOR SPECIALTIES RS-5855 REV C, 45374-
ST-0143-2VTU-EF	22.6250	22-5/8"	13.0000		ST143	ONAN 130-4722 QUIET COOL 12.5KW
ST-0171-2VT-F	22.7500	22-3/4"	13.0000		ST171	ONAN PART NUMBER 130-6171
ST-0603-2M-F	22.7500	22-3/4"	22.7500	22-3/4"	ST603	51066
ST-0052-4I-F	22.7500	22-3/4"	27.0000		ST52	SNOWCAT WITH CUMMINS ENGINE
ST-0174-3RT-B	22.8125	22-13/16"	19.0000		ST174	ONAN 130-3552, 1A15278,190301
ST-0148-5N-B	23.5000	23-1/2"	20.0000		ST148	Modine 1A17130, 0398071
ST-0066-5R-EF	23.5000	23-1/2"	18.5000	18-1/2"	ST66	
ST-0343-4I-F	23.5000	23-1/2"	29.0000	29"	ST343	
ST-0486-3M-F	23.5000	23-1/2"	30.2500	30-1/4"	ST486	G073996
ST-0090-3R-B	23.6250	23-5/8"	18.2500	18-1/4"	ST90	1989 FORD BRONCO II
ST-0334-4I-B	23.7500	23-3/4"	17.8750	17-7/8"	ST334	OLYMPIAN 120-331-174
ST-0240-4VTW-B	23.8125	23-13/16	18.3750	18-3/8	ST240	GEHL 4610 SKID STEER RS1939
ST-0246-5N-B	23.8750	23-7/8"	21.1250	21-1/8"	ST246	BRUSH BANDIT 100
ST-0157-4N-B	23.8750	23-7/8"	18.0000		ST157	
ST-0407-4I-B	24.0000	24"	18.7500	18-3/4"	ST407	
ST-0444-4M-B	24.0000	24"	19.0000	19"	ST444	FORD D9JL-8005-C, 8GAA
ST-0252-4N-B	24.0000		19.1250	19-1/8"	ST252	RDI80051BB, 45751
ST-0339-4M-NC	24.0625	24-1/16"	22.1250	22-1/8"	ST339	
ST-0298-3VTU-B	24.2680		21.8680		ST298	
ST-0619-4M-F	24.3750	24-3/8"	23.3750	23-3/8"	ST619	
ST-0353-4VT-NC	24.4375	24-7/16"	20.0000	20"	ST353	
ST-0084-5S-FM	24.5000	24-1/2"	23.7500	23-3/4"	ST84	
ST-0198-5M-NC	24.6094	24-39/64	20.7188	20-23/32"	ST198	PERFEX 209336A, SUPERIOR 30R131
ST-0061-3MZ-EF	24.6250	24-5/8"	16.5000	16-1/2"	ST61	
ST-0253-3VT-NC	24.6875	24-11/16"	32.3750	32-3/8"	ST253	ONAN 130-7834
ST-0075-5R-NC	25.0000	25"	15.6250	15-5/8"	ST75	HYSTER LIFT
ST-0658-2M-NC	25.0000	25"	22.7500	22-3/4"	ST658	14140, 0E9837C

ST-0128-2T-EF	25.1250	25-1/8"	19.0000	19"	ST128	Generac 097372C
ST-0621-3M-NC	25.1250	25-1/8"	22.1250	22-1/8"	ST621	RS6737
ST-0208-7N-NC	25.2500	25-1/4"	21.2500	21-1/4"	ST208	MCCORD PN 9459 4708
ST-0558-7M-NC	25.3750	25-3/8"	23.5000	23-1/2"	ST558	
ST-0578-2T-NC	25.4375	25-7/16"	23.5000	23-1/2"	ST578	12368D08 PLYMOUTH
ST-0286-4M-F	25.5000	25-1/2"	13.7500	13-3/4"	ST286	
ST-0592-4M-NC	25.5000	25-1/2"	21.1250	21-1/8"	ST592	
ST-0433-3M-EF	25.5000	25-1/2"	24.0000	24"	ST433	
ST-0432-4M-NC	25.5000	25-1/2"	30.0000	30"	ST432	GENERAC
ST-0492-4M-F	25.5000	25-1/2"	30.0000	30"	ST492	10000-77580
ST-0373-4I-F	25.5000	25-1/2"	30.5000	30-1/2"	ST373	
ST-0599-4M-EF	25.5625	25-9/16"	24.3750	24-3/8"	ST599	
ST-0641-5M-NC	25.6250	25-5/8"	21.1250	21-1/8"	ST641	MRR424733
ST-0244-4Y-NC	25.7500	25-3/4"	22.1250	22-1/8"	ST244	LULL 644
ST-0584-3M-B	26.0000	26"	14.2500	14-1/4"	ST584	5619509, MN422112-0584, 258-0271, 607-4843
ST-0421-5I-NC	26.0000	26"	20.5000	20-1/2"	ST421	
ST-0397-4I-B	26.0000	26"	22.0000	22"	ST397	
ST-0651-25-NC	26.0000	26"	22.7500	22-3/4"	ST651	A0003168058
ST-0639-4M-EF	26.0000	26"	25.1250	25-1/8"	ST639	
ST-0448-8M-NC	26.0000	26"	30.0000	30"	ST448	G068928, 1A17689
ST-0304-5I-F	26.0400		25.3750	25-3/8"	ST304	MODINE 1A11508, 030988, 130-0604
ST-0242-5N-NC	26.0625	26-1/16"	20.2500	20-1/4"	ST242	1A12336, 031285, RE20981
ST-0201-5I-F	26.1250	26-1/8"	22.0000		ST201	ONAN 130-0604, 4267, 4361 MODINE 1A11508
ST-0217-3I-NC	26.1875	26-3/16"	20.7500	20-3/4"	ST217	ONAN PART NUMBER 130-1817
ST-0006-5R-F	26.1875	26-3/16"	22.2188	22-7/32"	ST6	ONAN 130-3158
ST-0204-5X-NC	26.2500	26-1/4"	21.2500	21-1/4"	ST204	STUART RADIATOR 810132
ST-0034-4I-F	26.2500	26-1/4"	22.1250	22-1/8"	ST34	
ST-0299-5I-B	26.3125	26-5/16"	19.9850		ST299	
ST-0043-3R-RB	26.4375	26-7/16"	20.5000	20-1/2"	ST43	WHITE available with or without shroud
ST-0238-4M-NC	26.5000	26-1/2"	20.7500	20-3/4"	ST238	
ST-0580-3M-NC	26.5000	26-1/2"	22.1250	22-1/8"	ST580	RS A 326021
ST-0024-4R-F	26.5000	26-1/2"	22.5000	22-1/2"	ST24	
ST-0271-2VTU-NC	26.7500	26-3/4"	22.1250	22-1/8"	ST271	RADIATOR SPECIALTIES A-324008, SER DT
ST-0361-2VTU-NC	26.7500	26-3/4"	22.1250	22-1/8"	ST361	
ST-0457-5M-B	26.7500	26-3/4"	22.2500	22-1/4"	ST457	

ST-0505-5M-F	26.7500	26-3/4"	25.6250	25-5/8"	ST505	
ST-0081-5N-NC	26.7813	26-25/32"	20.0000		ST81	
ST-0632-4M-NC	26.8125	26-13/16"	20.7500	20-3/4"	ST632	1A16528, 030795, RE50468
ST-0019-6R-F	27.0000		21.3750	21-3/8"	ST19	TLD 1018593
ST-0579-5M-F	27.1250	27-1/8"	25.2500	25-1/4"	ST579	2488627-2676819, 03-79
ST-0338-5I-F	27.1960		25.1250	25-1/8"	ST338	130-1760 REV A
ST-0151-4N-NC	27.2031	27-13/64"	24.3125	24-5/16"	ST151	ONAN 130-4222-02
ST-0151-4N-NC	27.2031	27-13/64"	24.3125	24-5/16"	ST151	ONAN 130-4222-01
ST-0296-4I-NC	27.2500	27-1/4"	20.5000	20-1/2"	ST296	
ST-0211-3R-F	27.2500	27-1/4"	22.0000		ST211	ONAN PART NUMBE 130-0815
ST-0228-5M-F	27.2500	27-1/4"	22.0000		ST228	ONAN 130-0713
ST-0142-5I-F	27.2500	27-1/4"	22.0000		ST142	ONAN PART NUMBER 130-1238
ST-0479-5M-F	27.2500	27-1/4"	27.5000	27-1/2"	ST479	130-0449
ST-0194-5T-B	27.3750	27-3/8"	23.3750	23-3/8"	ST194	PGL 12000240, REV E
ST-0172-5M-NC	27.5000	27-1/2"	20.7500	20-3/4"	ST172	RADIATOR SPEC 26305-C/B VERSION
ST-0001-3VTS-BM	27.5000	27-1/2"	21.2500	21-1/4"	ST1	COVRAD S9043-913-00-1063
ST-0511-3M-NC	27.5000	27-1/2"	21.2500	21-1/4"	ST511	KATOLIGHT 35KW VERSION OF ST-0001
ST-0078-5R-F	27.5000	27-1/2"	22.2500	22-1/4"	ST78	
ST-0404-4I-F	27.5000	27-1/2"	24.7500	24-3/4"	ST404	
ST-0300-5I-B	27.5000	27-1/2"	28.0000		ST300	MITSUBISHI ME037860
ST-0223-3X-B	27.6250	27-5/8"	21.2500	21-1/4"	ST223	WOOD CHIPPER
ST-0616-2M-NC	27.6875	27-11/16"	21.5000	21-1/2"	ST616	
ST-0377-2VT-B	27.7500	27-3/4"	21.5000	21-1/2"	ST377	MN422112-2161, 431RA104
ST-0313-3M-NC	27.7500	27-3/4"	24.3750	24-3/8"	ST313	GM52728, RS-4948
ST-0622-4M-NC	27.7500	27-3/4"	26.5000	26-1/2"	ST622	RS6334
ST-0312-6I-NC	27.7500	27-3/4"	27.0000	27"	ST312	
ST-0594-4M-F	27.8750	27-7/8"	17.3750	17-3/8"	ST594	
ST-0283-2VT-NC	28.0000	28"	22.1250	22-1/8"	ST283	A-326402
ST-0325-2VT-NC	28.0000	28"	22.1250	22-1/8"	ST325	A-326402 REV A
ST-0260-5M-NC	28.0000	28"	23.6250	23-5/8"	ST260	CUMMINS 4BT
ST-0620-4M-EF	28.0000	28"	23.7500	23-3/4"	ST620	
ST-0048-3R-NC	28.0000	28"	24.0000	24"	ST48	
ST-0035-5R-TT	28.0000	28"	24.0000	24"	ST35	
ST-0192-2VTR-F	28.0000	28"	24.6250	24-5/8"	ST192	GENERAC OF2608A
ST-0503-3M-F	28.0000	28"	24.6250	24-5/8"	ST503	CPL-70.1301.100

ST-0524-2VTR-F	28.0000	28"	24.6250	24-5/8"	ST524	0F2608D
ST-0042-4R-NC	28.0000	28"	24.0000	24"	ST42	
ST-0544-4M-F	28.1250	28-1/8"	21.8750	21-7/8"	ST544	
ST-0617-4M-NC	28.1250	28-1/8"	23.7500	23-3/4"	ST617	
ST-0173-4M-TT	28.2500	28-1/4"	24.0000	24"	ST173	QUALITY COOLING 001875, DMT 50C
ST-0133-5M-TT	28.2500	28-1/4"	23.5000	23-1/2"	ST133	DMT 100KW
ST-0570-6M-NC	28.2500	28-1/4"	26.3750	26-3/8"	ST570	
ST-0229-5M-B	28.5000	28-1/2"	21.2500	21-1/4"	ST229	
ST-0342-4VT-EF	28.5000	28-1/2"	24.0000	24"	ST342	
ST-0370-5I-NC	28.5000	28-1/2"	24.0000	24"	ST370	
ST-0573-6M-NC	28.5000	28-1/2"	24.0000	24"	ST573	
ST-0435-5M-NC	28.5000	28-1/2"	20.5000	20-1/2"	ST435	C4910010000, C491-001-0000, APJ1-00009
ST-0056-4R-TT	28.6250	28-5/8"	23.2500	23-1/4"	ST56	
ST-0349-4I-NC	28.7500	28-3/4"	24.0000	24"	ST349	BALDOR ELECTRIC EA0006A86
ST-0606-4M-NC	28.7500	28-3/4"	24.8125	24-13/16"	ST606	10000-39054, 0F2857A
ST-0340-7I-F	28.8750	28-7/8"	18.5000	18-1/2"	ST340	
ST-0420-5I-NC	28.8750	28-7/8"	24.0000	24"	ST420	
ST-0549-3M-F	28.8750	28-7/8"	24.6250	24-5/8"	ST549	0F2608C
ST-0430-5M-NC	29.0000	29"	17.2500	17-1/4"	ST430	130-3772
ST-0650-5M-NC	29.0000	29"	24.0000	24"	ST650	
ST-0320-4I-F	29.0000		26.0000		ST320	ONAN 130-D354
ST-0354-6I-F	29.0000	29"	26.5000	26-1/2"	ST354	
ST-0248-5N-NC	29.1250	29-1/8"	24.5000	24-1/4"	ST248	1A11266, AT75227
ST-0021-4R-F	29.1250	29-1/8"	21.2500	21-1/4"	ST21	Onan 45 kw Genset
ST-0659-2M-NC	29.2500	29-1/4"	24.0000	24"	ST659	
ST-0446-4M-NC	29.3750	29-3/8"	24.0000	24"	ST446	1A10112, 030790, 207913 B
ST-0135-4T-NC	29.5000	29-1/2"	24.0000		ST135	Rad Spec A-255604 Kohler 80ROZ281
ST-0059-5R-NC	29.5000	29-1/2"	24.0000	24"	ST59	22-4532, A-255345
BT-0143-3I	29.5000	29-1/2"	28.6250	28-5/8"	BT143	
ST-0088-4S-NC	29.5625	29-9/16"	24.0000		ST88	RADIATOR SPECIALTIES A2556072 22-4913
ST-0593-3M-F	29.6250	29-5/8"	28.8125	28-13/16"	ST593	0130-5114-01
ST-0381-3VT-F	29.6250	29-5/8"	29.0000	29"	ST381	130-5114-02
ST-0086-4R-B	29.7500	29-5/8"	24.0000		ST86	MODINE 10958 030782,WHITE D3300T
ST-0106-5I-B	29.7500	29-3/4"	24.0000		ST106	MODINE 10958 030782,WHITE D3300T 5 ROWS
ST-0015-5R-FM	29.8750	29-7/8"	21.3750	21-3/8"	ST15	

ST-0233-6M-B	30.0000		24.7500	24-3/4"	ST233	
ST-0227-4M-F	30.0000		23.7500	23-3/4	ST227	Olympian 120-480
ST-0390-4I-NC	30.1250	30-1/8"	27.0000	27"	ST390	69000715, 79000716
ST-0470-5M-F	30.2500	30-1/4"	28.2500	28-1/4"	ST470	F1JL-8005-F
ST-0284-4T-B	30.2500	30-1/4"	30.1200		ST284	
ST-0422-4I-NC	30.2500	30-1/4"	30.5000	30-1/2"	ST422	D9JL-B
ST-0577-5M-EF	30.3750	30-3/8"	25.7500	25-3/4"	ST577	ENG-11729E00, B5022-07
BT-0091-6Y	30.3750	30-3/8"	26.0000		BT91	ELGIN
ST-0065-6T-EF	30.5000	30-1/2"	18.1250	18-1/8"	ST65	PERKINS (ND MARTSON 20224201-A)
ST-0612-4M-NC	30.5000	30-1/2"	22.0000	22"	ST612	
ST-0047-5S-NC	30.5000	30-1/2"	23.5000	23-1/2"	ST47	
ST-0175-4J-NC	30.5000	30-1/2"	25.5000	25-1/2"	ST175	KATOLIGHT 70694
ST-0589-4M-NC	30.5000	30-1/2"	26.1250	26-1/8"	ST589	
ST-0190-5M-F	30.5000	30-12"	26.5000	26-1/2"	ST190	CATERPILLAR 9Y5936, 1A14573
ST-0309-3M-F	30.5570		29.6250	29-5/8"	ST309	CAT 3116DI, 125KW
BT-0103-5Y	30.5625	30-9/16"	28.3750	28-3/8"	BT103	ELGIN WITH 01-0083
ST-0598-3M-EF	30.6250	30-5/8"	18.5000	18-1/2"	ST598	130-3415
ST-0045-6T-EF	30.7500	30-3/4"	18.2500	18-1/4"	ST45	SCREEN PLANT
ST-0305-3M-NC	30.7500	30-3/4"	24.0000		ST305	A-326018
ST-0029-5S-NC	30.7500	30-3/4"	24.0000		ST29	RADIATOR SPECIALTIES A276522
ST-0207-3VT-NC	30.7500	30-3/4"	24.0000		ST207	KOHLER A-273412
ST-0136-5I-F	30.7500	30-3/4"	22.0000		ST136	A-279028
ST-0539-4M-NC	30.7500	30-3/4"	26.0000	26"	ST539	620000700034, 32001468, 7010487
ST-0039-3VT-EF	30.8750	30-7/8"	26.0000		ST39	
ST-0103-3I-NC	30.8125	30-13/16"	24.0000		ST103	
ST-0306-3Z-F	30.8750	30-7/8"	29.2500	29-1/4"	ST306	RS-6757
BT-0052-3I	30.9375	30-15/16"	26.3750	26-3/8"	BT52	Olympian BW 560000001
ST-0180-3M-NC	30.9375	30-15/16"	24.0000		ST180	KOHLER A-326023-3 ROWS
ST-0550-4M-NC	30.9375	30-15/16"	26.0000	26"	ST550	
ST-0328-5I-NC	31.0000	31"	26.0000	26"	ST328	PSI 32000300, 36087-01-094, REV H
ST-0412-5I-NC	31.0000	31"	26.0000	26"	ST412	32000306 REV A, SUA92132
ST-0033-4M-NC	31.0000		24.1563	24-5/32"	ST33	ONAN 130-1818
ST-0072-5R-NC	31.0000		27.0000		ST72	Elliot Magnetek
ST-0138-3M-NC	31.0000		19.0000		ST138	
ST-0393-5Z-EF	31.0000	31"	21.0000	21"	ST393	MN422000-41703c

ST-0097-4R-B	31.0000		26.2500	26-1/4"	ST97	COVRAD S9042 91300164
ST-0028-4R-NC	31.0000		24.0000		ST28	RADIATOR SPECIALTIES A326023
ST-0467-5M-EF	31.1250	31-1/8"	22.3750	22-3/8"	ST467	56053-1028 REV 2, E96788
ST-0646-7M-B	31.1250	31-1/8"	26.5000	26-1/2"	ST646	R-7046
ST-0163-6H-NC	31.1875	31-3/16"	24.0000		ST163	SD-2156
ST-0167-3T-NC	31.1875	31-3/16"	24.0000		ST167	RAD SPEC RS5384, '07BRUSHBANDIT 200XT
ST-0202-5I-B	31.2500	31-1/4"	24.0000		ST202	75kW Fermont M9, D3400T X264, spec
ST-0126-3M-EF	31.2500	31-1/4"	23.4375	23-7/16"	ST126	Perkins
ST-0333-4I-NC	31.2500	31-1/4"	23.6250	23-5/8"	ST333	
ST-0183-5P-F	31.2500	31-1/4'	25.3750	25-3/8"	ST183	SAMSUNG 130SE EXCAVATOR
ST-0445-5M-F	31.2500	31-1/4"	30.3750	30-3/8"	ST445	RS-5153 REV D, 70023-01-041
ST-0662-3M-NC	31.3125	31-15/16"	23.5000	23-1/2"	ST662	MNY20224301E0P
ST-0159-4I-B	31.3750	31-3/8"	24.5000	24-1/2"	ST159	
ST-0574-5M-B	31.5000	31-1/2"	24.3750	24-3/8"	ST574	
BT-0181-6I	31.5000	31-1/2"	24.5000	24-1/2"	BT181	
ST-0154-4I-B	31.7500	31-3/4"	24.5000	24-1/2"	ST154	DR 1091
ST-0546-3M-NC	31.7500	31-3/4"	25.3750	25-3/8"	ST546	
ST-0494-2M-NC	31.7500	31-3/4"	26.2500	26-1/4"	ST494	M2923200074, 232000652
ST-0317-3I-NC	31.8750	31-7/8"	23.8750	23-7/8"	ST317	
ST-0256-4VT-NC	32.0000		25.5625	25-9/16"	ST256	
ST-0121-5I-NC	32.0000		24.0000		ST121	KOHLER 50 RZ62, SPEC 187137-62L
ST-0394-5I-B	32.0000	32"	24.0000	24"	ST394	
ST-0068-5R-NC	32.0000		20.2500	20-1/4"	ST68	
ST-0357-4I-F	32.0000	32"	26.0000	26"	ST357	
ST-0497-6M-NC	32.0000	32"	26.5000	26-1/2"	ST497	D-63820
ST-0261-5N-NC	32.2270		28.7500	28-3/4"	ST261	JOHN DEERE AT25116
ST-0380-4VT-NC	32.2500	32-1/4"	22.1250	22-1/8"	ST380	79000520
ST-0595-4M-NC	32.2500	32-1/4"	24.1250	24-1/8"	ST595	RR318336
ST-0257-4VT-NC	32.2500	32-1/4"	27.1875	27-3/16"	ST257	T RAD PROD# APN5-00041, T RAD C771-002
ST-0077-5R-NC	32.2500	32-1/4"	27.1875	27-3/16"	ST77	CoPAR C381-014-0001
ST-0288-4VT-NC	32.2500	32-1/4"	27.1875	27-3/16"	ST288	T RAD PROD# C771-002-0001-7
ST-0341-4I-NC	32.3125	32-5/16"	25.5000	25-1/2"	ST341	
ST-0249-3X-F	32.3125	32-5/16	28.2500	28-1/4"	ST249	
ST-0101-5N-F	32.3125	32-5/16"	26.2500	26-1/4"	ST101	YOUNG
ST-0278-5J-NC	32.5000	32-1/2	27.0750		ST278	

ST0231-5X-NC	32.5000	32-1/2"	27.5000	27-1/2"	ST231	
ST-0274-6M-F	32.5000	32-1/2"	28.0000		ST274	GROVE CRAIN MODEL IND-68 SN 22953
ST-0243-5N-NC	32.5000	32-1/2"	24.0000		ST243	A-255605
ST-0536-3M-F	32.5000	32-1/2"	28.2500	28-1/4"	ST536	Detroit Diesel 50357001
ST-0352-4VTM-NC	32.5000	32-1/2"	28.5000	28-1/2"	ST352	
ST-0540-5M-F	32.6250	32-5/8"	30.1250	30-1/8"	ST540	0D7825A
ST-0134-4M-EF	32.7500	32-3/4"	26.2500	26-1/4"	ST134	Kohler 2420790100, RPN68.06101-71 Daehung RAD
ST-0440-5M-NC	32.8750	32-7/8"	28.2500	28-1/4"	ST440	0F2611
ST-0576-3M-F	32.9375	32-15/16"	24.0000	24"	ST576	820660
ST-0010-3VT-FM	32.9375	32-15/16"	30.0000		ST10	
ST-0063-3VT-F	32.9375	32-15/16"	30.2500	30-1/4"	ST63	MODINE 1A13704
ST-0610-5M-NC	33.0000	33"	26.0000	26"	ST610	
BT-ST0258-5J-EF	33.1250	33-1/8"	19.6875	19-11/16"	ST258	EXTEC CRUSHER
ST-0114-5I-F	33.1484	33-19/128"	27.4375	27-7/16"	ST114	ONAN PART NUMBER 130-1161
ST-0002-3R-F	33.1484	33-19/128"	27.4375	27-7/16"	ST2	ONAN 130-0961 (Version M)
ST-0254-5N-NC	33.1875	33-3/16"	36.3750	36-3/8"	ST254	1A17574, 0399077, 140160-0001
ST-0487-3VT-EF	33.2500	33-1/4"	20.8750	20-7/8"	ST487	0A1602, CR561
ST-0376-3VT-EF	33.2500	33-1/4"	21.2500	21-1/4"	ST376	GENERAC 86131
ST-0322-4I-NC	33.2500	33-1/4"	25.8750	25-7/8"	ST322	
ST-0395-5I-F	33.2500	33-1/4"	27.5000	27-1/2"	ST395	O31183
ST-0438-5I-F	33.2500	33-1/4"	27.5000	27-1/2"	ST438	KATOLIGHT D125, SUA75804
ST-0054-4R-F	33.3750	33-3/8"	27.1875	27-3/16"	ST54	
ST-0230-4VTW-NC	33.3750	33-3/8"	20.2500	20-1/4"	ST230	RAD SPEC 7532
ST-0247-6X-EF	33.3750	33-3/8"	16.0000		ST247	
ST-0181-4VT-F	33.3750	33-3/8"	14.5000	14-1/2"	ST181	INGERSOLL RAND 36889772
ST-0582-5M-B	33.3750	33-3/8"	21.1250	21-1/8"	ST582	
ST-0409-6I-NC	33.4375	33-7/16"	27.1250	27-1/8"	ST409	
ST-0498-4M-EF	33.5000	33-1/2"	23.8750	23-7/8"	ST498	
ST-0362-3I-NC	33.5000	33-1/2	24.0000	24"	ST362	
ST-0590-7I-NC	33.5625	33-9/16'	27.1250	27-1/8"	ST590	
ST-0203-4M-F	33.5625	33-9/16'	27.1875	27-3/16"	ST203	ONAN PART NUMBER 130-0817
ST-0140-4I-F	33.5625	33-9/16"	29.2500	29-1/4"	ST140	MODINE 1A14487
ST-0200-3VTW-F	33.6250	33-5/8"	29.2500	29-1/4"	ST200	GENERAC 087871A, MODINE 1A16309, 1A17715
BT-0030-7N	33.6875	33-11/16"	28.0000		BT30	ONAN 50KW GENSET, 0649 KOMATSU ENGINE
ST-0526-5M-NC	33.7500	33-3/4"	26.0000	26"	ST526	12255 E 02

ST-0196-6M-F	33.7500	33-3/4"	27.4375	27-7/16"	ST196	ONAN 130-0429
ST-0588-2M-NC	33.7500	33-3/4"	30.2500	30-1/4"	ST588	232000-639 SANKYO RADIATOR
ST-0116-5I-F	33.7500	33-3/4"	37.4375	33-7/16"	ST116	ONAN PART NUMBER 130-0430
ST-0069-5R-NC	33.8594	33-55/64	27.2500	27-1/4"	ST69	General Radiator 22-3097-01
ST-0122-4I-NC	33.8750	33-7/8"	27.3750	27-3/8"	ST122	CATERPILLAR SN-2913-09, B3341L0
ST-0482-5M-F	33.8750	33-7/8"	27.3750	27-3/8"	ST482	7W4463, 16690, B3341L0
ST-0636-4M-EF	33.9375	33-15/16"	33.0000	33"	ST636	1450-064-0001
ST-0115-7R-NC	34.0000		21.2500	21-1/4"	ST115	CUMMINS POWER PRODUCTS DR1245
ST-0437-5M-EF	34.0000	34"	21.5000	21-1/2"	ST437	30301138408
ST-0554-6M-NC	34.0000	34"	26.0000	26"	ST554	1A10783, MODINE 030181
ST-0273-4X-NC	34.0000		26.0240		ST273	
ST-0012-4L-FM	34.0000		28.6250	28-5/8"	ST12	
ST-0225-5M-F	34.0000		27.5625	27-9/16"	ST225	ONAN 130-0809 WITH SHROUD
ST-0060-4R-NC	34.0000		27.1250	27-1/8"	ST60	
ST-0032-5R-F	34.0000		27.4375	27-7/16"	ST32	ONAN 130-0809
ST-0067-4R-F	34.0000		27.4375	27-7/16"	ST67	ONAN 130-0961 (Version L)
ST-0413-5I-NC	34.0000	34"	28.8750	28-7/8"	ST413	32000209
ST-0293-4R-F	34.0000		29.9375	29-15/16"	ST293	PERFEX R9017D
ST-0104-5I-F	34.0000		27.4375	27-7/16"	ST104	KOHLER A-291407
ST-0533-5M-NC	34.0625	34-1/16"	27.2500	27-1/4"	ST533	1N-4343
ST-0074-4T-F	34.0625	34-1/16"	27.5000	27-1/2"	ST74	DIAMOND REO
ST-0057-5R-F	34.1250	34-1/8"	27.2500	27-1/4"	ST57	
ST-0236-4VT-EF	34.1875	34-3/16	21.7500	21-3/4"	ST236	KOHLER OE#: GB30301253508NE
ST-0051-4R-NC	34.2500	34-1/4"	24.0000		ST51	HERCULES D4800 1A10412
ST-0082-5I-NC	34.2500	34-1/4"	27.1250	27-1/8"	ST82	ONAN 130-2667
ST-0275-6I-NC	34.2500	34-1/4"	29.8750	29-7/8"	ST275	3304 CAT
ST-0506-4M-NC	34.2500	34-1/4"	32.2500	32-1/4"	ST506	
ST-0396-4I-F	34.2500	34-1/2"	32.5000	32-1/2"	ST396	GENERAC 087871, 14140, 120.1301.100
ST-0113-3X-NC	34.3125	34-5/16"	27.1875	27-3/16"	ST113	ONAN PART NUMBER 130-2517
ST-0661-4M-NC	34.3125	34-5/16"	29.3750	29-3/8"	ST661	0130-4696-02, 203901240
ST-0120-5M-NC	34.3750	34-3/8"	20.0625	20-1/16"	ST120	RS-7276R
ST-0038-3VT-EF	34.3750	34-3/8"	29.3750	29-3/8"	ST38	
ST-0464-4M-F	34.4375	34-7/16"	28.3750	28-3/8"	ST464	810319, 058061
ST-0036-5R-EF	34.4375	34-7/16"	29.5000	29-1/2"	ST36	
ST-0439-5M-NC	34.5000	34-1/2"	16.8750	16-7/8"	ST439	GM51341

ST-0355-5I-F	34.5000	34-1/2"	27.8750	27-7/8"	ST355	
ST-0529-5M-F	34.5000	34-1/2"	29.5000	29-1/2"	ST529	YOUNG 289726, 89292091, 2678249
BT-0292-7M	34.6250	34-5/8"	22.5000	22-1/2"	BT292	
ST-0418-5I-NC	34.7500	34-3/4"	23.7500	23-3/4"	ST418	A-352521
ST-0016-4R-NC	34.7500	34-3/4"	26.6250	26-5/8"	ST16	ONAN 130-4358
ST-0364-6I-NC	34.7500	34-3/4"	27.0000	27"	ST364	KATOLIGHT BM11795
ST-0415-5I-NC	34.7500	34-3/4"	28.5000	28-1/2"	ST415	
ST-0447-5M-F	34.7500	34-3/4"	28.5000	28-1/2"	ST447	CAT D 100 80
ST-0112-3I-F	34.7500	34-3/4"	29.2500	29-1/4"	ST112	KOHLER 80RZ282 SPEC 187334-82N
ST-0176-5J-NC	34.7500	34-3/4"	26.0000		ST176	MODINE 1A16529, A-276526
ST-0109-5I-F	34.7500	34-3/4"	29.1875	29-3/16"	ST109	ONAN PART NUMBER 130-4596
BT-0017-2VTR	34.8125	34-13/16"	28.6875	28-11/16"	BT17	OLYMPIAN 120-258
BT-0003-4I	34.8125	34-13/16"	28.6875	28-11/16"	BT3	OLYMPIAN
ST-0160-5I-NC	34.8750	34-7/8"	14.5625	14-9/16"	ST160	RS6474, 050190100036, 050190100021
ST-0129-4T-NC	34.8750	34-7/8"	25.8750	25-7/8"	ST129	A-352191, 1A17556
ST-0375-4I-NC	35.0000	35"	17.5000	17-1/2"	ST375	
ST-0541-4M-NC	35.0000	35"	24.0000	24"	ST541	R524787, 69000510, 99000513, 451074
ST-0139-4T-NC	35.0000		24.2500	24-1/4"	ST139	12927B10
ST-0089-5R-NC	35.0000		25.2500	25-1/4"	ST89	MODINE 1A18653, GM 14096
ST-0330-6M-NC	35.0000	35"	26.5000	26-1/2"	ST330	0130-4357-01 MODINE
ST-0026-4R-NC	35.0000		26.7500	26-3/4"	ST26	RADIATOR SPECIALTIES GM29698
ST-0206-5I-F	35.0000		27.0000		ST206	11213458, 181471
ST-0468-8M-NC	35.0000	35"	27.0000	27"	ST468	
ST-0443-6I-NC	35.0000	35"	27.1250	27-1/8"	ST443	INDIANA HEAT TRANSFER 11794 6412
ST-0008-4R-NC	35.0000		28.5000	28-1/2"	ST8	
BT-0148-4I	35.0000	35"	28.6250	28-5/8"	BT148	BEARWARD 564600001
BT-0182-4I	35.0000	35"	28.6250	28-5/8"	BT182	120-511, 120-452
BT-0057-4I	35.0625	35-1/16"	28.6875	28-11/16"	BT57	Olympian 5655700001, ref 120-549
BT-0060-4I	35.0625	35-1/16"	28.6875	28-11/16"	BT60	
ST-0551-4M-EF	35.1250	35-1/8"	25.1875	25-3/16"	ST551	
ST-0187-4VT-EF	35.1250	35-1/8"	30.0000		ST187	INGERSOLL RAND GENERATOR
ST-0098-4R-NC	35.1250	35-1/8"	26.5000	26-1/2"	ST98	PSI 32000295 125KW GENSET
ST-0405-4I-NC	35.1250	35-1/8"	26.5000	26-1/2"	ST405	32000374 REV D
ST-0403-5I-EF	35.2500	35-1/4"	26.3750	26-3/8"	ST403	56062/ 1033, 120-303
ST-0640-4M-NC	35.2500	35-1/4"	27.0000	27"	ST640	

BT-0163-5I	35.2500	35-1/4"	28.6250	28-5/8"	BT163	5646500001, 5646505601197, 120512BK, 120-
ST-0366-5I-NC	35.2500	35-1/4"	28.7500	28-3/4"	ST366	MTU PART# SUA121159
BT-0221-7T	35.2500	35-1/4"	31.0000	31"	BT221	330870
ST-0466-5M-EF	35.3125	35-5/16"	18.7500	18-3/4"	ST466	810319, 058061
ST-0168-4VT-NC	35.3125	35-5/16"	26.7500	26-3/4"	ST168	KOHLER GM35307 (GM29698)
ST-0169-3VT-NC	35.3125	35-5/16"	26.7500	26-3/4"	ST169	KOHLER GM29697
ST-0170-2VT-NC	35.3125	35-5/16"	26.7500	26-3/4"	ST170	KOHLER GM29696
ST-0149-8N-EF	35.3750	35-3/8"	18.0000		ST149	MARSTON PA 66 GF 30
ST-0534-4M-EF	35.3750	35-3/8"	28.5625	28-9/16"	ST534	120-173, 55853.197/560
ST-0496-5I-NC	35.6250	35-5/8"	25.7500	25-3/4"	ST496	CUMMINS 500FOC41DA
ST-0371-5I-NC	35.7500	35-3/4"	25.8750	25-7/8"	ST371	
ST-0102-5I-NC	35.7500	35-3/4"	26.0000		ST102	MODINE 1A15268, A273472
ST-0561-3M-EF	35.7500	35-3/4"	26.3750	26-3/8"	ST561	
ST-0326-4I-F	35.7500	35-3/4"	30.0000		ST326	GENERAC GENERATOR
ST-0100-5I-NC	35.7500	35-3/4"	31.7500	31-3/4"	ST100	MODINE 12434
ST-0108-5I-F	35.7813	35-25/32"	29.5000	29-1/2"	ST108	4-71 DETROIT
ST-0460-4M-F	35.8125	35-13/16"	29.5000	29-1/2"	ST460	3118864 73C, 8927123
ST-0642-6M-NC	35.8750	35-7/8"	25.7500	25-3/4"	ST642	
ST-0660-4M-NC	35.8750	35-7/8"	26.0000	26"	ST660	1A12474, 030391, RE21429
BT-0287-4M	35.8750	35-7/8"	28.5000	28-1/2"	BT287	120445
ST-0367-4I-F	35.8750	35-7/8"	30.0000	30	ST367	
ST-0310-2T-FM	35.9060		24.1250	24-1/8"	ST310	45-60 KW, SDM, 30301051901
ST-0118-4T-NC	36.0000		24.0000		ST118	KATOLIGHT
ST-0314-5I-NC	36.0000		26.2500	26-1/4"	ST314	1A14191, MODINE 130-314
ST-0094-4I-F	36.0000		26.4610	26-59/128"	ST94	ONAN 130-3792
ST-0359-4VT-NC	36.0000	36	27.1875	27-3/16"	ST359	
ST-0023-5R-F	36.0000		27.4375	27-7/16"	ST23	ONAN 130-1611
ST-0193-4R-NC	36.0000		26.4375	26-7/16"	ST193	MODINE 1A14100, 130-3064 MODIFIED
ST-0064-4R-NC	36.0000		26.4375	26-7/16"	ST64	MODINE 1A14100, 130-3064
ST-0463-5M-NC	36.0000	36"	27.6250	27-5/8"	ST463	
ST-0037-4R-NC	36.0000		28.6250	28-5/8"	ST37	MODINE 15267
ST-0414-5I-F	36.0000	36"	31.8750	31-7/8"	ST414	
ST-0099-5R-NC	36.0625	36-1/16"	28.6250	28-5/8"	ST99	KOHLER 80RZ282
ST-0656-3M-NC	36.1250	36-1/8"	28.7500	28-3/4"	ST656	A-324321
ST-0315-2Z-NC	36.2500	36-1/4"	26.2500	26-1/4"	ST315	R21741, 4Z807-17, SN05-2

ST-0264-5I-NC	36.2500	36-1/4"	26.7500	26-3/4"	ST264	ROCORE PN: R21740, MODEL # SNO5-3, GM64504
ST-0667-4M-NC	36.2500	36-1/4"	28.5000	28-1/2"	ST667	
ST-0614-6M-NC	36.2500	36-1/4"	33.0000	33"	ST614	
ST-0096-3I-F	36.3125	36-5/16"	30.3750	30-3/8"	ST96	GENERAC 69593A 1002168 HD
ST-0294-2VTU-F	36.3125	36-5/16"	30.3750	30-3/8"	ST294	
ST-0095-2VTU-F	36.3125	36-5/16"	30.3750	30-3/8"	ST95	GENERAC 69593A 1002168
ST-0049-5R-NC	36.3750	36-3/8"	28.6094	28-39/64"	ST49	MODINE 1A16460
ST-0285-3M-NC	36.3750	36-3/8"	28.6250	26-5/8"	ST285	A-276470
ST-0289-8I-F	36.3750	36-3/8"	28.6250	26-5/8"	ST289	RADIATOR SPECIALTIES RS-5893
ST-0287-4VTU-F	36.3750	36-3/8"	28.6250	26-5/8"	ST287	GENERAC OD6386
BT-0112-8I	36.5000	36-1/2"	26.6875	26-11/16"	BT112	GTD/CPP 10001291
ST-0419-5I-NC	36.5000	36-1/2"	28.3750	28-3/8"	ST419	A-273433
ST-0556-5M-NC	36.5000	36-1/2	28.7500	28-3/4"	ST556	
ST-0348-4M-NC	36.5000	36-1/2"	25.8750	25-7/8"	ST348	
ST-0291-6I-F	36.5000	36-1/2"	26.0000		ST291	MODINE 1A9899, 0308094, AR80174
ST-0062-5R-NC	36.5000	36-1/2"	28.5000	28-1/2"	ST62	
ST-0025-4R-NC	36.5000	36-1/2"	28.6250	28-5/8"	ST25	RADIATOR SPECIALTIES A276469
ST-0165-4M-NC	36.5000	36-1/2"	28.6250	28-5/8"	ST165	Kohler A-276471
ST-0166-4M-NC	36.5000	36-1/2"	28.6250	28-5/8"	ST166	Kohler A-336663
ST-0011-6R-BK	36.6250	36-5/8"	28.5000	28-1/2"	ST11	1978 Maxim Fire truck
BT-0223-4M	36.6250	36-5/8"	28.7500	28-3/4"	BT223	120-453, 56251.560.1197
ST-0263-5I-F	36.6875	36-11/16"	29.2500	29-1/4"	ST263	INTERNATIONAL HARVESTER 603743C91, 415
ST-0195-4RT-EF	36.7500	36-3/4"	23.0000		ST195	3E0102450000
ST-0197-3RT-EF	36.7500	36-3/4"	23.0000		ST195	3E0102450000-3 ROW VERSION
ST-0079-4I-NC	36.7500	36-3/4"	28.6250	28-5/8"	ST79	1A19157, GM24868
ST-0514-4M-NC	36.7500	36-3/4"	28.6250	28-5/8"	ST514	JMC 13-R-015, 01-00579 REV. C
ST-0259-2VTU-F	36.9375	36-15/16"	30.3750	30-3/8"	ST259	GENERAC 070836A
ST-0232-5T-NC	36.9375	36-15/16"	25.7500	25-3/4"	ST232	KOHLER A-255608, 60KW
ST-0649-4M-NC	37.0000	37"	19.3750	19-3/8"	ST649	80757, H153786
ST-0384-5M-NC	37.0000	37"	26.0000	26"	ST384	
ST-0250-6R-F	37.0000	37"	26.3750	25-3/8"	ST250	CATERPILLAR CS-553 ROLLER
ST-0336-5I-F	37.0000	37"	27.1250	27-1/8"	ST336	
ST-0425-5R-NC	37.0000	37"	27.2500	27-1/4"	ST425	
ST-0581-6M-NC	37.0000	37"	28.7500	28-3/4"	ST581	
ST-0633-6M-B	37.1250	37-1/8"	28.5000	28-1/2"	ST633	

BT-0159-5I	37.2500	37-1/4"	18.2500	18-1/4"	BT159	99000672, 69000672, A029B173
ST-0087-6R-NC	37.2500	37-1/4"	20.0000		ST87	KOHLER 150REOZJD GM31839 RAD GROUP
ST-0489-4M-NC	37.2500	34-1/4"	20.0000	20"	ST489	GM52732
ST-0461-3M-F	37.2500	37-1/4"	31.5000	31-1/2"	ST461	120M.1301.100-1, 14140, 0G1286H
ST-0545-6M-NC	37.5000	37-1/2"	15.5000	15-1/2"	ST545	GM75705 REV B
ST-0471-9M-NC	37.5000	37-1/2"	22.4375	22-7/16"	ST471	10457402010, PGL 32000938, 451522, REV.D
ST-0543-4M-NC	37.5000	37-1/2"	23.6250	23-5/8"	ST543	YB37532, U808957K
ST-0608-3M-F	37.5000	37-1/2"	26.6250	26-5/8"	ST608	
ST-0424-5I-NC	37.5000	37-1/2"	28.6250	28-5/8"	ST424	3909836
BT-0183-6M	37.5000	37-1/2"	28.6250	28-5/8"	BT183	120-446
ST-0450-3M-B	37.5000	37-1/2"	30.0000	30"	ST450	
ST-0237-6M-NC	37.5000	37-1/2"	31.5000	31-1/2"	ST237	KOHLER A-273927
ST-0209-2VTX-F	37.6250	37-5/8'	29.6250	29-5/8"	ST209	GENERAC 0G1286A
ST-0626-2M-F	37.6250	37-5/8'	32.4375	32-7/16"	ST626	OG1286
ST-0199-6I-NC	37.7500	37-3/4"	20.2500	20-1/4"	ST199	RADIATOR SPECIALTIES(GM20534-RAD ONLY)
ST-0665-5M-NC	37.7500	37-3/4"	28.6250	28-5/8"	ST665	RS-2688, 10623-01
ST-0093-5R-NC	37.7500	37-3/4"	32.7500	32-3/4"	ST93	ONAN 130-0834
ST-0512-5M-F	37.7500	37-3/4"	33.1250	33-1/8"	ST512	
ST-0368-8I-NC	38.0000	38"	19.5000	19-1/2"	ST368	
ST-0277-6I-NC	38.0000		20.2500	20-1/4"	ST277	RADIATOR SPECIALTIES GM 31838 REV A 27799-
ST-0399-6I-NC	38.0000	38"	28.6250	28-5/8"	ST399	
ST-0270-5M-NC	38.0000		31.6250	31-5/8"	ST270	MODINE 1A17486, KOHLER 180KOZJ
ST-0664-7M-NC	38.1250	38-1/8"	19.5000	19-1/2"	ST664	
ST-0158-6Z-F	38.1250	38-1/8"	29.8125	29-13/16"	ST158	
ST-0214-3X-NC	38.1875	38-3/16"	23.8380		ST214	PERKINS/CATERPILLAR
ST-0472-5M-F	38.2500	38-1/4"	28.7500	28-3/4"	ST472	810321
ST-0073-5R-F	38.2500	38-1/4"	32.5000	32-1/2"	ST73	GENERAC
ST-0335-5I-EF	38.3750	38-3/8"	19.0000	19"	ST335	
ST-0500-3M-F	38.3750	38-3/8"	32.5625	32-9/16"	ST500	120.1301.100-1, 0G1286C, 14140
ST-0130-5I-NC	38.4297	38-55/128"	28.6170	28-79/128"	ST130	ONAN 130-2431, 1A11934
ST-0292-4I-F	38.7500	38-3/4"	32.5000	32-1/2"	ST292	0E1411A
ST-0609-4M-F	38.7500	38-3/4"	32.5000	32-1/2"	ST609	
ST-0402-2X-F	38.7500	38-3/4"	32.6250	32-5/8"	ST402	1414G,0G1286G, OE-120,1301,000
ST-0485-2X-F	38.7500	38-3/4"	32.7500	32-3/4"	ST485	0G1286B
ST-0631-6M-NC	38.8750	38-7/8"	25.6250	25-5/8"	ST631	

ST-0164-5N-NC	39.0000		28.6250	28-5/8"	ST164	Case 387 Loader, 131230A1, 16734
ST-0266-8M-NC	39.2500	39-1/4"	22.3300		ST266	GM49660, 10000-07725
ST-0191-6N-NC	39.2500	39-1/4"	30.6250	30-5/8"	ST191	VOLVO 11110137
ST-0663-4M-NC	39.2500	39-1/4"	32.0000	32"	ST663	
BT-0033-7R	39.3750	39-3/8"	32.2500	32-1/4"	BT33	Elliot Magnetek 125 RD
ST-0053-8M-EF	39.3750	39-3/8"	14.0000		ST53	
ST-0491-4M-EF	39.5000	39-1/2"	22.5000	22-1/2"	ST491	05005002, MN2220006124, MN4221339090,
ST-0329-5I-NC	39.5000	39-1/2"	31.6250	31-5/8"	ST329	KOHLER GM10988, 1A18486
ST-0222-5M-NC	39.7500	39-3/4"	34.2500	34-1/4"	ST222	VOLVO 843989, 8549 BGR REV 2
ST-0477-5M-NC	40.0000	40"	21.2500	21-1/4"	ST477	SUA80761
ST-0356-6I-NC	40.0000	40"	27.1250	27-1/8	ST356	
ST-0416-5I-NC	40.0000	40"	27.1250	27-1/8"	ST416	BM11464
ST-0517-4M-NC	40.0000	40"	27.1250	27-1/8"	ST517	
ST-0212-7M-NC	40.0000	40"	27.5000	27-1/2"	ST212	KATOLIGHT MOD D-180FPJ4, ENG RG-6081A
ST-0346-7I-NC	40.0000	40"	27.5000	27-1/2"	ST346	
ST-0452-6M-NC	40.0000	40"	27.8750	27-7/8"	ST452	GTI1239A, RE52824
ST-0344-7X-NC	40.0000	40"	28.0000	28"	ST344	01-00579 REV C
ST-0385-7X-NC	40.0000	40"	28.0000	28"	ST385	
ST-0563-9M-NC	40.0000	40"	28.0000	28"	ST563	
BT-0254-4I	40.0000	40"	31.5000	31-1/2"	BT254	RS-2852 REV.0, 42762-01-001
ST-0571-3M-NC	40.0000	40"	32.2500	32-1/4"	ST571	
ST-0276-5M-F	40.0000	40"	35.0000		ST276	
BT-0153-5Z	40.0000	40"	36.0000	36"	BT153	167450A
ST-0666-5M-F	40.1250	40-1/8"	36.3750	36-3/8"	ST666	
ST-0076-7R-EF	40.1875	40-3/16"	33.4375	33-7/16"	ST76	
ST-0456-6M-NC	40.2500	40-1/4"	28.0000	28"	ST456	
ST-0319-6I-F	40.2500	40-1/4"	35.5000	35-1/2"	ST319	FORD 460 TURBO GENSET ENGINE
ST-0560-5M-NC	40.3750	40-3/8"	27.1875	27-3/16"	ST560	
BT-0172-4I	40.3750	40-3/8"	31.5000	31-1/2"	BT172	
ST-0535-5M-EF	40.3750	40-3/8"	31.8750	31-7/8"	ST535	864891, 9739, 863061
ST-0030-5LE-NC	40.4375	40-7/16"	27.1250	27-1/8"	ST30	ONAN 130-3567
ST-0071-6R-F	40.4375	40-7/16"	27.1172	27-15/128"	ST71	ONAN 130-3557
ST-0369-8N-EF	40.5000	40-1/2"	17.5000	17-1/2"	ST369	287-3889
ST-0520-3M-B	40.5000	40-1/2"			ST520	381004290 232000-6430
ST-0044-4X-F	40.5000	40-1/2"	30.0000		ST44	YT SN849946

BT-0013-5I	40.5000	40-1/2"	29.5000	29-1/2"	BT13	
ST-0423-3I-F	40.6750		29.7500	29-3/4"	ST423	130-5996-02
ST-0302-3VTU-B	40.6750		30.4375	30-9/16"	ST302	ONAN 0130-5996-01
BT-0127-6M	40.8125	40-13/16"	27.7500	27-3/4"	BT127	
ST-0188-5M-NC	40.8750	40-7/8"	20.7500	20-3/4"	ST188	JOHN DEERE 544 LOADER AT223881
ST-0189-7M-NC	40.8750	40-7/8"	20.7500	20-3/4"	ST189	JD 644G LOADER COPAR AT158071, AT177176
ST-0406-5I-NC	41.0000	41"	21.2500	21-1/4"	ST406	CY0001A34, DR2677
ST-0379-5I-EF	41.0000	41	23.1250	23-1/8"	ST379	MN122440-2661
ST-0205-7I-EF	41.0000		24.0000		ST205	
ST-0119-4T-NC	41.0000		29.5000	29-1/2	ST119	D333
ST-0522-3M-F	41.0000	41"	31.5000	31-1/2"	ST522	3138196
ST-0332-4I-B	41.0625	41-1/16"	36.3750	36-3/8"	ST332	
ST-0268-6X-NC	41.1250	41-1/8"	20.6250	20-5/8"	ST268	JOHN DEERE AT102963
ST-0668-3M-NC	41.1250	41-1/8"	36.5625	36-9/16"	ST668	
ST-0555-2M-EF	41.1875	41-3/16	30.2500	30-1/4"	ST555	Cummins QSB5-J8.9,PA066Y500,S22127056,V503
ST-0527-5M-NC	41.2500	41-1/4"	26"	26"	ST527	
ST-0345-2VTW-NC	41.2500	41-1/4"	28.1250	28-1/8"	ST345	
BT-0137-7I	41.2500	41-1/4"	33.0000	33"	BT137	
ST-0235-4M-NC	41.3750	41-3/8"	29.7500	29-3/4"	ST235	CATERPILLAR 2N0254
ST-0382-8I-NC	41.5000	41-1/2"	23.1250	23-1/8"	ST382	
ST-0387-7X-EF	41.5000	41-1/2"	29.6250	26-5/8"	ST387	
ST-0321-2VTW-NC	41.5000	41-1/2"	63.8300		ST321	
ST-0565-7M-NC	41.6250	41-5/8"	18.7500	18-3/4"	ST565	
ST-0262-4X-NC	41.6875	41-11/16"	20.6250	20-5/8"	ST262	JOHN DEERE AT208372, COPAR C241-035-0000-7
ST-0031-4VH-NC	41.7188	41-23/32"	27.4375	27-7/16"	ST31	ONAN 130-4360
ST-0127-5M-NC	41.7500	41-3/4"	28.6250	28-5/8"	ST127	IHT 1277G08
ST-0586-2M-NC	41.7500	41-3/4"	30.5000	30-1/2"	ST586	
BT-0023-6Z	41.7500	41-3/4"	34.0000		BT23	MODINE BK3
ST-0441-6M-F	41.8750	41-7/8"	21.0000	21"	ST441	40-3902005
ST-0004-4R-FM	42.0000		31.0000		ST4	
ST-0290-6I-NC	42.0000		26.2050		ST290	MODINE 12020, 030486
ST-0297-6I-F	42.0000		26.0000		ST297	12232P, 40-3902003
ST-0058-5Z-NC	42.0000		28.2500	28-1/4"	ST58	MODINE 1A12149, 030487
ST-0018-4R-NC	42.0000		28.6250	28-5/8"	ST218	Modine 1A14434 130-3207
ST-0475-6T-NC	42.0000	42"	32.0000	32"	ST475	CUMMINS NT4968

BT-0154-7I	42.0000	42"	33.1250	33-1/8"	BT154	
ST-0272-4X-NC	42.0800		26.0000		ST272	
ST-0350-7N-NC	42.1250	42-1/8"	21.2500	21-1/4"	ST350	
ST-0182-6M-NC	42.5000	42-1/2'	27.9375	27-15/16"	ST182	RADIATOR SPECIALTIES RS7590
ST-0218-5EC-NC	42.6250	42-5/8"	27.8750	27-7/8"	ST218	GM47124-RADIATOR
ST-0124-3R-F	42.6875	42-11/16"	25.1875	25-3/16"	ST124	ONAN PART NUMBER 130-4691-01
ST-0125-4R-F	42.6875	42-11/16"	25.1875	25-3/16"	ST125	ONAN PART NUMBER 130-4691-02
ST-0459-5M-NC	42.7500	42-3/4"	27.5000	27-1/2"	ST459	GM52734 REV B
ST-0516-5M-F	42.7500	42-3/4"	31.0000	31"	ST516	HARRISON 3153196
ST-0005-8RFM	42.8125	42-13/16"	28.3750	28-3/8"	ST5	YT 304572
ST-0022-4R-NC	42.8125	42-13/16"	28.6250	28-5/8"	ST22	ONAN 130-2519
ST-0156-4H-F	43.0000		26.7500	26-3/4"	ST156	ONAN
BT-0121-6T	43.0625	43-1/16"	24.2500	24-1/4"	BT121	
ST-0213-3VTX-NC	43.3750	43-3/8"	30.6875	30-11/16"	ST213	CATERPILLAR 325C
ST-0141-7I-F	43.4063	43-13-32"	27.1200	27-15/128"	ST141	ONAN PART NUMBER 130-1996
ST-0117-7I-NC	43.4063	43-13/32	27.1200	27-15/128	ST117	1A15308
BT-0031-6Z	43.4375	43-7/16"	34.2500	34-1/4"	BT31	CATERPILLAR
ST-0623-6M-EF	43.5000	43-1/2"	17.0000	17"	ST623	
ST-0110-5R-NC	43.5000	43-1/2"	25.5000	25-1/2"		KOHLER 80RZ282 SPEC 187334-82N
ST-0451-3M-EF	43.5000	43-1/2"	27.3750	27-3/8"	ST451	FLEETWOOD MOTORHOME
ST-0605-6M-NC	43.5000	43-1/2"	28.6250	28-5/8"	ST605	GM 29699, REV A 29668-01-019
ST-0562-6M-NC	43.5000	43-1/2"	29"	29"	ST562	
ST-0643-5M-EF	43.5000	43-1/2"	30.0000	30"	ST643	
ST-0179-4R-F	43.5625	43-9/16"	28.2500	28-1/4"	ST179	ONAN 130-4359-02
ST-0184-3R-F	43.5625	43-9/16"	28.2500	28-1/4"	ST184	ONAN 130-4359-01
ST-0185-4R-F	43.5625	43-9/16"	28.2500	28-1/4"	ST185	ONAN 130-4359-03
ST-0647-5M-NC	43.6250	43-5/8"	32.2500	32-1/4"	ST647	
ST-0162-7N-NC	43.7500	43-3/4"	28.6200	28-79/128"	ST162	Kohler A-290952, Modine 1A10156
ST-0417-7I-NC	43.7500	43-3/4"	28.6250	28-5/8"	ST417	1A9702, 030478, AR76840, 015730
BT-0197-6MC	43.7500	43-3/4"	33.0000	33"	BT197	CAT 2007010-RA, 427839
ST-0219-6R-F	43.7500	43-3/4"	39.5625	39-9/16"	ST219	
ST-0014-6R-FM	43.9375	43-15/16"	27.1250	27-1/8"	ST14	
ST-0602-8M-NC	44.0000	44"	21.3750	21-3/8"	ST602	
BT-0273-6M	44.0000	44"	31.0000	31"	BT273	9117200
ST-0027-6R-NC	44.5000	44-1/2"	25.6875	25-11/16"	ST27	RADIATOR SPECIALTIES A255763

ST-0155-5N-NC	44.5000	44-1/2"	25.7500	25-3/4"	ST155	
ST-0411-6I-NC	44.5000	44-1/2"	28.5000	28-1/2"	ST411	GM52731
ST-0137-5I-EF	44.6250	44-5/8"	21.0000		ST137	KOHLER PN GM84763
ST-0566-5M-NC	43.7500	44-3/4"	27"	27"	ST566	
ST-0003-5R-NC	44.7500	44-3/4"	44.1250	44-1/8"	ST3	R23177-230REOZJD w/JD RG6081A159151
ST-0618-7T-EF	45.1250	45-1/8"	25.2500	25-1/4"	ST618	
ST-0150-6H-EF	45.2500	45-1/4"	27.8125	27-13/16"	ST150	
ST-0360-3VT-NC	45.3750	45-3/8"	34.0000	34	ST360	
ST-0513-4M-F	45.5000	45-1/2"	39.3750	39-3/8"	ST513	
ST-0318-6I-NC	45.6250	45-5/8"	28.6172	28-79/128"	ST318	
ST-0013-5N-EF	45.8750	45-7/8"	20.7500	20-3/4"	ST13	
ST-0611-5M-NC	45.8750	45-7/8"	35.3750	35-3/8"	ST611	
ST-0629-9M-NC	45.9375	45-15/16"	21.7500	21-3/4"	ST629	
ST-0046-7LE-TT	46.0000		26.5000	26-1/2"	ST46	
ST-0085-5R-EF	46.1250	46-1/8"	25.7500	25-3/7"	ST85	GM11650, GM52736
BT-0138-3M	46.1875	46-3/16"	34.2500	34-1/4"	BT138	
ST-0654-5M-EF	46.2500	46-1/4"	38.5000	38-1/2"	ST654	
ST-0635-6M-F	46.2500	46-1/4"	39.7500	39-3/4"	ST635	0G1219, 150.1301.100-2
ST-0009-5R-NC	46.3125	46-5/16"	36.0000		ST9	Caterpillar 7C8627, 613-5133
ST-0153-6I-NC	46.3125	46-5/16"	36.0000		ST153	Caterpillar 7C8627-6 ROW VERSION
BT-0145-3I	46.3750	46-3/8"	35.2500	35-1/4"	BT145	
ST-0499-6M-EF	46.5000	46-1/2"	19.6250	19-5/8"	ST499	RS-6108 REV C, 70905-02-017
ST-0408-4N-NC	46.5000	46-1/2"	24.0000	24"	ST408	A-343033, 1A17491
ST-0478-5M-NC	46.5000	46-1/2"	25.2500	25-1/4"	ST478	GM46335
BT-0050-3I	46.5000	46-1/2"	35.5000	35-1/2"	BT50	Olympian Genset D200P4_1 w/Int'l GCD325
ST-0657-3M-NC	46.5000	46-1/2"	40.2500	40-1/4"	ST657	
BT-0055-3I	46.6250	46-5/8"	33.3750	33-3/8"	BT55	Bear W 55273.0241, REF NO 120-030
BT-0293-4T	46.7500	46-3/4"	31.5000	31-1/2"	BT293	HRJW205TC HIPOWER, 6068HFG82
ST-0215-5P-F	46.7500	46-3/4"	36.5000	36-1/2"	ST215	GENERAC OA2816
ST-0615-5M-F	46.7500	46-3/4"	39.7500	39-3/4"	ST615	
ST-0557-5M-F	46.7500	46-3/4"	40.2500	40-1/4"	ST557	0G1933A, 0A6164
ST-0265-5P-F	46.7720		39.7280		ST265	GENERAC OD4902
ST-0279-4T-NC	47.0000		39.7500	39-3/4"	ST279	GENERAC, 0A6164, 24289129
ST-0391-5I-F	47.0000	47	29.7500	39-3/4"	ST391	
ST-0281-5Z	47.0810		22.6250	22-5/8"	ST281	SCANIA 320 SR CRUSHER, MN422134-6490

ST-0537-5M-NC	47.1250	47-1/8"	24.5000	24-1/2"	ST537	GM63538
ST-0144-5T-NC	47.1875	47-3/16"	17.1250	17-1/8"	ST144	MODINE 3A49104,26 06052,AT210996 JD 700
BT-0059-6R	47.1875	47-3/16"	32.0000		BT59	
BT-0002-5Z	47.3125	47-5/16"	38.0000		BT2	GENERAC 10130 13.3L 230-275
ST-0295-7M-NC	47.3750	47-3/8"	25.0000	25"	ST295	
ST-0559-4M-EF	47.3750	47-3/8"	29.6250	29-5/8"	ST559	
ST-0331-8M-NC	47.5000	47-1/2"	25.5000	25-1/2"	ST331	RS3510
BT-0014-5Z	47.5000	47-1/2"	36.0000		BT14	O & M 167450A
ST-0210-4VTW-F	47.6250	47-5/8'	35.3750	35-3/8"	ST210	CATERPILLAR 330 BL, PN:136-2275
BT-0117-5O	47.8125	47-13/16	42.5000	42-1/2"	BT117	
ST-0324-5Z-EF	47.4950		22.6250	22-5/8"	ST324	
ST-0041-4I-EF	47.8750	47-7/8"	31.2500	31-1/4"	ST41	VOLVO, GM26613, 230050586, 100313137
ST-0239-6T-NC	48.0000	48"	17.3750	17-3/8"	ST239	JOHN DEERE 644, AT224106R
BT-0281-7M	48.0000	48"	42.5000	42-1/2"	BT281	
ST-0224-5P-F	48.1250	48-1/8"	36.7500	36-3/4"	ST224	GENERAC 0G1219ASRV
BT-0028-4R	48.1250	48-1/8"	43.0000		BT28	KOHLER 200ROZD, A-328687
ST-0177-6T-NC	48.1250	48-1/8'	17.4375	17-7/16"	ST177	COPAR C241-039-0002-7, JOHN DEERE 624
BT-0263-6M	48.2500	48-1/4"	38.0000	38"	BT263	
BT-0063-4R	48.2500	48-1/4"	43.0000		BT63	A-328687
BT-0078-8I	48.3750	48-3/8"	39.2500	39-1/4"	BT78	CATERPILLAR
BT-0226-6M	48.3750	48-3/8"	39.5000	39-1/2"	BT226	4N-2593, 465-5072
ST-0269-4M-NC	48.5000	48-1/2"	28.1250	28-1/8"	ST269	MODINE 1A17486, KOHLER 180KOZJ
ST-0508-5M-NC	48.5000	48-1/2	37.0000	37"	ST508	
ST-0564	48.5000	48-1/3	39.5000	39-1/2"	ST564	
BT-0230-6I	48.7500	48-3/4"	38.2500	38-1/4"	BT230	CUMMINS 855
ST-0634-6M-B	48.7500	48-3/4"	39.2500	39-1/4"	ST634	S037449-3
BT-0275-6M	48.7500	48-3/4"	43.0000	43"	BT275	
BT-0231-6I	49.2500	49-1/4"	37.1250	37-1/8"	BT231	CUMMINS 855, 21083
ST-0107-5T-EF	49.2500	49-1/4"	38.0000		ST107	
ST-0600-8M-EF	49.2500	49-1/4"	41.0000	41"	ST600	
ST-0323-7P-EF	49.3750	49-3/8"	18.5000	18-1/2"	ST323	
BT-0084-5I	49.5000	49-1/2"	37.3750	37-3/8"	BT84	
BT-0161-6I	49.5000	49-1/2"	42.7500	42-3/4"	BT161	
BT-0189-3M	49.6250	49-5/8"	37.0000	37"	BT189	
ST-0627-3T-EF	49.7500	49-3/4"	18.1250	18-1/8"	ST627	130-6735

BT-0015-7I	49.7500	49-3/4"	42.8750	42-7/8"	BT15	
BT-0152-5Z	50.0000	50"	41.0000	41"	BT152	PERFEX 0V-09-RB SN 2868
ST-0091-7XT-EF	50.2500	50-1/4"	17.9375	17-15/16"	ST91	CATERPILLAR
ST-0392-5Z-EF	50.2500	50-1/4"	41.0000	41"	ST392	
BT-0216-6M	50.6250	50-5/8"	25-3750	25-3/8"	BT216	SUA9453, SUA82566
ST-0585-5M-NC	50.6875	50-11/16"	27.1250	27-1/8"	ST585	
BT-0026-8R	50.7500	50-3/4"	37.5000	37-1/2"	BT26	ONAN 130-1240
BT-0178-7R	50.7500	50-3/4"	40.8750	40-7/8"	BT178	
BT-0129-5I	50.8125	50-13/16"	37.5000	37-1/2"	BT129	ONAN 130-0836, PERFEX R-8798, YOUNG
BT-0004-5I	50.8750	50-7/8"	37.5000	37-1/2"	BT4	ONAN 130-0992
BT-0118-8N	50.9690	50-31/32	39.2500	39-1/4"	BT118	
ST-0389-6I-NC	51.0000	51"	26.3750	26-3/8"	ST389	A-343525, 1A18216
BT-0162-5I	51.0000	51"	37.0000	37"	BT162	
BT-0054-6I	51.0000		43.0000		BT54	MODINE 1A15778, A-272616
BT-0106-5Y	51.0000		43.0000		BT106	A-272616. 1A15778-CORRECT
BT-0019-5R	51.0000		43.0000		BT19	MODINE M-9-EF
BT-0134-5I	51.0000	51"	43.0000	43"	BT134	M-9-EF 1A11217D
BT-0279-6M	51.1250	51-1/8"	40.7500	40-3/4"	BT279	1542VV
BT-0257-5R	51.1250	51-1/8"	43.0000	43"	BT257	SPO4183, M-9-EF
BT-0276-5R	51.1250	51-1/8"	43.0000	43"	BT276	
BT-0111	51.3750	51-3/8"	42.5000	42-1/2"	BT111	GTD/CPP 10001291, A-282888
ST-0410-7I-EF	51.6250	51-5/8"	25.0000	25"	ST410	MN124423-2411, MN122440-4430
ST-0226-5M-NC	51.8750	51-7/8"	19.9375	19-15/16"	ST226	JOSEPHSON MFG (OC 01-0175) (ROCK DRILL)
BT-0086-5I	51.8750	51-7/8"	27.2500	27-1/4"	BT86	KOHLER GM52736-REV C
BT-0266-6M	51.9375	51-15/16"	36.7500	36-3/4"	BT266	
ST-0105-5I-NC	52.0000		30.0000		ST105	ONAN PART NUMBER 130-2522
BT-0144-8I	52.0000	52"	39.5000	39-1/2"	BT144	
BT-0141-5X	52.0000	52"	42.0000	42"	BT141	V-27056
BT-0041-6I	52.4375	52-7/16"	42.5000	42-1/2"	BT41	CUMMINS 855
ST-0007-8R-NC	53.0000	53"	24.7500	24-3/4"	ST7	
BT-0151-5I	53.0000	53"	39.0000	39"	BT151	130-5444
ST-0040-4R-EF	53.0000	53"	44.8750	44-7/8"	ST40	VOLVO
ST-0132-4I-EF	53.0000	53"	45.0000		ST132	VOLVO
BT-0299-6I5I	53.0000	53"	108.0000	108"	BT299	
BT-0300-6I5I	53.0000	53"	108.0000	108"	BT300	

ST-0178-5P-F	53.1563	53-5/32"	42.3750	42-3/8"	ST178	GENERAC OC1152-COPPER BRASS VERSION
ST-0131-5M-EF	53.2500	53-1/4"	25.5000	25-1/2"	ST131	ONAN 130-7161
ST-0601-5M-NC	53.6250	53-5/8"	21.3125	21-5/16"	ST601	
BT-0034-8I	53.7500	53-3/4"	47.3750	47-3/8"	BT34	CUMMINS GENSET
BT-0036-6Z	53.7500	53-3/4"	41.0000		BT36	CUMMINS GENSET
ST-0401-4I-EF	54.0000	54"	39.5000	39-1/2"	ST401	100311063
BT-0297-6M	54.0000	54"	43.0000	43"	BT297	
BT-0160-5I	54.2500	54-1/4"	43.0000	43"	BT160	M-9-EF
BT-0104-5O	54.4375	54-7/16"	48.0625	48-1/16"	BT104	YOUNG RADIATOR, 146003
ST-0123-4T-NC	54.5000	54-1/2"	23.7500	23-3/4"	ST123	Modine 1A17682 A-3433177
BT-0232-6I	54.7500	54-3/4"	39.5000	39-1/2"	BT232	
BT-0188-8I	54.7500	54-3/4"	49.6875	49-11/16"	BT188	333538
BT-0219-7I	55.0000	55"	45.5000	45-1/2"	BT219	
BT-0006-8I	55.0000		48.0625	48-1/16"	BT6	ONAN 130-1239
BT-0007-6I	55.0000		48.0625	48-1/16"	BT7	ONAN 130-2117
BT-0097-5I	55.0000		48.0625	48-1/16'	BT97	ONAN PART NUMBER 130-1011
BT-0177-7I	55.1250	55-1/8"	45.3750	45-3/8"	BT177	
BT-0252-5M	55.5000	55-1/2"	38.3750	38-3/8"	BT252	
BT-0243-5T	55.5000	55-1/2"	42.5000	42-1/2"	BT243	1A12423, MODINE 030389, A280993
BT-0044-7I	55.5000	55-1/2"	45.5000	45-1/2"	BT44	KOHLER GENSET
BT-0025-5R	55.5938	55-19/32"	38.0000		BT25	ONAN 130-3527
BT-0048-5R	55.8750	55-7/8"	38.0000		BT48	ONAN PART NUMBER 130-3527
ST-0337-4I-EF	56.0000	56"	42.2500	42-1/4"	ST337	CAT 221-1714
BT-0289-6T	56.1250	56-1/8"	32.3750	32-3/8"	BT289	
ST-0458-6R-F	56.2500	56-1/4"	45.5625	45-9/16"	ST458	0G1933C
ST-0473-6R-F	56.2500	56-1/4"	45.5625	45-9/16"	ST473	0G1933A
ST-0092-5R-F	56.3125	56-5/16"	42.3750	42-3/8"	ST92	GENERAC OG1933B 5 ROW
ST-0221-7X-EF	56.3125	56-5/16"	21.2500	21-1/4"	ST221	
ST-0111-5R-F	56.3125	56-5/16"	42.3750	42-3/8"	ST111	GENERAC OG1933
ST-0050-6R-F	56.3750	56-3/8"	42.5781	42-37/64"	ST50	GENERAC OG1933B 6 ROW
ST-0436-6I-F	56.3750	56-3/8"	45.6250	45-5/8"	ST436	0G1933 VARIATION
BT-0285-6T	56.5000	56-1/2"	29.3750	29-3/8"	BT285	
ST-0347-6I-F	56.5000	56-1/2"	45.5000	45-1/2"	ST347	0G1933
BT-0241-8I	56.6250	56-5/8"	50.3438	50-11/32"	BT241	BGR8147CT, 8N-4880
ST-0480-3M-EF	57.5000	57-1/2"	42.6250	42-5/8"	ST480	CH11964, MN222000-10620P,63694

ST-0378-4I-EF	57.6250	57-5/8"	42.2500	42-1/4"	ST378	
ST-0327-3M-F	57.7500	57-3/4"	24.5000	24-1/2"	ST327	SR89, A068H458
BT-0140-5I	57.7500	57-3/4"	34.5000	34-1/2"	BT140	
ST-0523-6M-F	57.8750	57-7/8"	45.5625	45-9/16"	ST523	
ST-0644-5M-F	58.1250	58-1/8"	45.7500	45-3/4"	ST644	0D7479
ST-0147-6M-TT	58.2500	58-1/4"	52.5000	52-1/2"	ST147	GENERAC PN OL3105A-1301005
ST-0528-6M-EF	58.2500	58-1/4"	52.7500	52-3/4"	ST528	RS-6490 REV E
BT-0136-5I	58.3750	58-3/8"	43.1250	43-1/8"	BT136	BEARWARD 120-045
BT-0110-5R	58.5625	58-9/16	48.5000	48-1/2"	BT110	450KW SUPERIOR 450-R-161, PPN: CRE-8637
ST-0363-8I-NC	58.6250	58-5/8"	26.0000	26"	ST363	
BT-0158-6I	58.6250	58-5/8"	46.7500	46-3/4"	BT158	
BT-0113-5O	58.6875	58-11/16"	44.3750	44-3/8"	BT113	
BT-0008-6I	59.2500	59-1/4"	43.0000		BT8	A123358
BT-0001-6R	59.2500	59-1/4"	49.0000		BT1	SN849946
BT-0018-6R	59.2500	59-1/4"	49.0000		BT18	RADIATOR SPECIALTIES 1A11221D
BT-0077-7I	59.2500	59-1/4"	49.0000		BT77	M-12-EF, 2A15780
BT-0020-7I	59.2500	59-1/4"	49.0000		BT20	MODINE M-12
BT-0021-7I	59.2500	59-1/4"	49.0000		BT21	MODINE M-12-EF
BT-0149-7I	59.2500	59-1/4"	49.0000	49"	BT149	MODINE SP04966
BT-0176-7I	59.2500	59-1/4"	49.0000	49"	BT176	
BT-0185-7I	59.2500	59-1/4"	49.0000	49"	BT185	SP04567
BT-0038-5Z	59.2500	59-1/4"	49.1250	49-1/8"	BT38	
BT-0043-6I	59.2500	59-1/4"	50.0000		BT43	Modine EK3-10 1A9953D
BT-0290-6M	59.5000	59-1/2"	49.0000	49"	BT290	RSA279606
BT-0107-6Y	59.6875	59-11/16"	48.2500	48-1/4"	BT107	CUMMINS
BT-0087-6Y	59.7500	59-3/4'	50.0000		BT87	IEA EC015S17, SN 4642
BT-0074-7M	59.7500	59-3/4"	48.2500	48-1/4"	BT74	CUMMINS 4063046
BT-0233-8I	59.9375	59-15/16"	48.2500	48-1/4"	BT233	CUMMINS KTA19
BT-0167-5I	60.0000	60"	54.3125	54-5/16"	BT167	65.06101.7034, 440211-00197, P22FE
ST-0301-5I-F	60.5000	60-1/2"	45.7500	45-3/4"	ST301	GENERAC
ST-0303-5I-F	60.5000	60-1/2"	53.7500	53-3/4"	ST303	Generac PN: 0K7454
BT-0051-4T	61.0000		27.0000		BT51	Detroit 6063-TH35, Generac IDLC400-D
ST-0234-5P-EF	61.2500	61-1/4"	41.8125	41-13/16	ST234	
ST-0655-6M-F	61.2500	61-1/4"	46.1250	46-1/8"	ST655	
BT-0022-5Z	61.3750	61-3/8"	49.0000		BT22	MODINE M-12-EF (2A15503)

BT-0037-5Z	61.3750	61-3/8"	49.1250	49-1/8"	BT37	A274274, 1A15503D
BT-0064-5Z	61.3750	61-3/8"	49.0000		BT64	MODINE 1A11220D, M12 EF
BT-0250-5M	61.3750	61-3/8"	49.0000		BT250	
BT-0267-6R	61.3750	61-3/8"	49.0000	49"	BT267	M-12-EF, SP04219
BT-0088-7Y	62.0000		47.0000		BT88	STUART RADIATOR 9134300, 80086, SN 5349
BT-0075-8I	62.0000		47.0000		BT75	CUMMINS
BT-0010-7I	62.2500	62-1/4"	52.5000	52-1/2"	BT10	DETROIT
BT-0027-6Z	62.4375	62-7/16"	26.5000	26-1/2"	BT27	CATERPILLAR
BT-0240-8I	62.5000	62-1/2"	50.3438	50-11/32	BT240	BGR8137CT, 4N-8995
BT-0301-7M	63.5000	63-1/2"	61.2500	61-1/4"	BT301	GTI2446A
BT-0046-4R	64.1250	64-1/8"	66.7500	66-3/4"	BT46	CATERPILLAR PN 179-0728 REV 07
BT-0205-6I	64.2500	64-1/4"	49.1250	49-1/8"	BT205	7C-4404
BT-0105-4R	64.2500	64-1/4"	55.8750	55-7/8"	BT105	RAD SPEC RFC-005-13R
BT-0139-6I	64.2500	64-1/4"	56.0000	56"	BT139	DETROIT DISEL SERIES 60 (600 HP)
BT-0146-6I	64.2500	64-1/4"	56.0000	56"	BT146	
BT-0242-8I	64.3750	64-3/8"	67"	67"	BT242	241-7650, 169-2192, 169-2651, 241-7652, 10R-07
BT-0029-7T	64.8750	64-7/8"	54.0000		BT29	90 M69, CAT G379A REMOTE
BT-0135-5X	64.8750	64-7/8"	54.5000	54-1/2"	BT135	PERFEX DDV 90
BT-0053-7N	65.0000		56.0000		BT53	Modine FK3-8 1A12371
BT-0116-6Y	65.0000		49.0000		BT116	MODINE M-12-HR
BT-0096-6Y	65.1875	65-3/16'	56.0000		BT96	MODINE M-16-EF
BT-0195-6Y	65.1875	65-3/16"	56.0000	56"	BT195	
BT-0198-5M	65.5000	65-1/2"	49.0000	49"	BT198	54426
BT-0200-7I	65.5000	65-1/2"	49.0000	49"	BT200	9127500
BT-0179-7I	65.6250	65-5/8"	56.0000	56"	BT179	DIESEL RADIATOR CO. 56631, SN W13779
BT-0120-6Y	65.6875	65-11/16"	55.3750	55-3/8"	BT120	Cummins P/N 3050216
BT-0234-8I	65.6875	65-11/16"	55.3750	55-3/8"	BT234	CUMMINS KTA28
BT-0042-4I5I	65.7500	65-3/4"	49.8750	49-7/8"	BT42	MODINE 1A18331
BT-0142-6Y	65.7500	65-3/4"	55.3750	55-3/8"	BT142	10322655
BT-0291-6M	66.3750	66-3/8"	54.0000	54"	BT291	
BT-0203-6M	66.5000	66-1/2"	55.6250	55-5/8"	BT203	204-539
BT-0009-5N	66.6094	66-39/64"	55.0000		BT9	ONAN 130-3587
BT-0173-5M	66.8125	66-13/16"	59.0000	59"	BT173	A-361529, 1A18333, 00270-6
BT-0049-5I	68.0000		55.0000		BT49	A-291704
BT-0095-6Y	68.2500	68-1/4"	55.2500	55-1/4"	BT95	CUMMINS PART NUMBER 184367

BT-0082-6I	71.0000		51.1250	51-1/8"	BT82	MODINE M16-HR-10
BT-0283-7M	71.2500	71-1/4"	63.0000	63"	BT283	
BT-0083-6Z	71.5000	71-1/2"	63.0000		BT83	MODINE M20-EF-ST, SP7188
BT-0024-6Z	71.5000	71-1/2"	63.0000		BT24	M-20
BT-0062-6Z	71.5000	71-1/2"	63.0000		BT62	Modine A-279649, 1A16314
BT-0089-6Y	71.5000	71-1/2"	63.0000		BT89	MODINE M-20-EF, SPO-1649
BT-0124-6Z	71.5000	71-1/2"	63.0000	63"	BT124	Cummins 3001254
BT-0166-6Y	71.5000	71-1/2"	63.0000	63"	BT166	SP03970, M-20-EF
BT-0207-6I	71.5000	71-1/2"	63.0000	63"	BT207	A-354539, 1A17742
BT-0123-6T	72.4375	72-7/16"	86.6250	86-5/8"	BT123	API
BT-0294-5M	73.2500	73-1/4"	59.2500	59-1/4"	BT294	
CRH-25-8-NF	73.2500	73-1/4"	66.5000		CR2	
CRH-20-6-NF	73.5000	73-1/2"	66.5000		CR1	
BT-0035-7R	74.3203	74-25/32"	68.6172	68-79/128"	BT35	ONAN 130-4354
BT-0184-6I	74.5000	74-1/2"	63.2500	63-1/4"	BT184	7C-4402
BT-0128-7X	74.5000	74-1/2"	69.2500	69-1/4"	BT128	PERFEX MODEL OV-025-RE, K-75
BT-0005-6R	74.7500	74-3/4"	68.5625	68-9/16"	BT5	ONAN 130-1197
BT-0150-7X	75.0000	75"	63.0000	63"	BT150	
BT-0261-6T	75.0000	75"	67.5000	67-1/2"	BT261	
BT-0080-8Z	75.3750	75-3/8"	66.5000	66-1/2"	BT80	01025-0623 TUB GRINDER CAT 3412
BT-0288-8M	75.5000	75-1/2"	27.0000	27"	BT288	
BT-0286-7M	75.5000	75-1/2"	67.1250	67-1/8"	BT286	
BT-0122-8I	75.5000	75-1/2"	68.0000	68"	BT122	
BT-0012-6Z	76.2500	76-1/4"	74.2500	74-1/4"	BT12	BEAR WARD 55054AEB
BT-0090-8I	76.2500	76-1/4"	68.0000		BT90	MODINE M-25-EF, SP2398
BT-0092-6I	76.2500	76-1/4"	68.0000		BT92	M-25-EF, SP07109
BT-0061-6Z	76.2500	76-1/4"	68.0000		BT61	MODINE M25-FB
BT-0131-7I	76.2500	76-1/4"	68.0000	68"	BT131	
BT-0251-6Z	76.2500	76-1/4"	68.0000	68"	BT251	
BT-0079-8M	76.3750	76-3/8'	68.0000		BT79	MODINE M-25-EF, 1A11189
BT-0260-3M	76.8750	76-7/8"	34.3125	34-5/16"	BT260	
BT-0039-7I	77.0938	77-3/32"	85.6875	85-11/16"	BT39	X-6290
BT-0295-5M	77.1250	77-1/8"	34.1250	34-1/8"	BT295	
BT-0032-8I	77.7500	77-3/4"	66.0625	66-1/16"	BT32	FERMONT GENSET
BT-0133-8M	77.7500	77-3/4"	68.0000	68"	BT133	1A11487

BT-0269-8I	77.7500	77-3/4"	68.0000	68"	BT269	M-25-EF, 1A11187
BT-0264-6M	77.8125	77-13/16"	68.0000	68"	BT264	KATOLIGHT 46706
BT-0246-7I	79.0625	79-1/16"	70.2500	70-1/4"	BT246	
BT-0196-8I	79.5000	79-1/2"	68.3750	68-3/8"	BT196	56024 / 580
BT-0045-4I5I	80.2500	2038.5MM	78.7400	2000MM	BT45	ONAN PART NUMBER 130-5692, QST30-G5
BT-0229-8I	82.0000	82"	69.3750	69-3/8"	BT229	SP02253
BT-0047-8I	82.0000		82.0000		BT47	Perfex OV33-RA
BT-0108-4R	82.1250	82-1/8"	68.0000	68"	BT108	CATERPILLAR GENSET
BT-0193-5I	82.2500	82-1/4"	67.8750	67-7/8"	BT193	271-4311
BT-0155-7I	83.0000	83"	75.0000	75"	BT155	CAT D349
BT-0238-8I	84.0000	84"	63.0000	63"	BT238	CAT 3412-D379, 5L-2451
BT-0056-8I	84.3750	84-3/8"	74.1200	74-15/128"	BT56	Modine M-30-FB SP02457
BT-0119-6Y	84.6875	84-11/16"	72.0625	72-1/16"	BT119	
BT-0094-7I	84.6875	84-11/16"	72.0625	72-1/16'	BT94	ONAN PART NUMBER 130-3615
BT-0102-7I	84.7500	84-3/4"	72.0000		BT102	KTA 38, 2 CORE BEARWARD 5260816, 3050213
BT-0236-8I	86.5000	86-1/2"	73.0000	73"	BT236	BTCT8L8223
BT-0192-8I	86.5000	86-1/2"	82.0000	82"	BT192	25 SECTION FOLDED CORE CAT, 7C-4401
BT-0156-7I7I	86.7500	86-3/4"	86.0000	86"	BT156	
BT-0213-7I7I	86.7500	86-3/4"	86.0000	86"	BT213	
BT-0272-8I	87.1250	87-1/8"	90.0000	90"	BT272	249-0301
BT-0280-8I	87.6250	87-5/8"	86.7500	86-3/4"	BT280	2A17568
BT-0081-6Y	88.2500	88-1/4"	80.0000		BT81	CATERPILLAR 205-6557
BT-0245-8I8I	88.5000	88-1/2"	76.0000	76"	BT245	
BT-0270-8I	89.8750	89-7/8"	52.5000	52-1/2"	BT270	
BT-0058-8M	94.5000	94-1/2"	86.0000	86"	BT58	M-40-EF, 1A11194
BT-0093-6Y	95.3750	95-3/8"	86.0000		BT93	MODINE M-40-EF, 1A15434
BT-0115-8I	96.5000	96-1/2"	87.5000	96-1/2"	BT115	
BT-0100-7M	96.7500	96-3/4"	91.3750	91-3/8"	BT100	BTCT0T7043
BT-0235-8I	96.7500	96-3/4"	91.3750	91-3/8"	BT235	BTCTOK2964
BT-0126-6M	96.9375	96-15/16"	91.2500	91-1/4"	BT126	CATERPILLAR 9Y-6675 Double
BT-0016-8I	98.0000		69.0000		BT16	PERFEX OV-32-RV
BT-0274-8I8I	98.6250	98-5/8"	86.7500	86-3/4"	BT274	EX-GM 25489, 409050
BT-0175-7I	98.9375	98-15/16"	78.5000	78-1/2"	BT175	0179-4661, 5684000001
BT-0222-8I	99.5000	99-1/2"	90.8750	90-7/8"	BT222	R227788
BT-0262-8I8I	100.2500	100-1/4"	94.5000	94-1/2"	BT262	GM50728, 420578

BT-0101-8I	102.3750	102-3/8"			BT101	WAUKESHA 400KW GENSET
BT-0076-8I	104.0000		96.0000		BT76	MODINE M50-EF, 1A15545
BT-0282-8I8I	106.4375	106-7/16"	95.2500	95-1/4"	BT282	
BT-0244-8I	106.9375	106-15/16"	67.0000	67"	BT244	
BT-0253-8I8I	108.1250	108-1/8"	94.0000	94"	BT253	
BT-0277-8I8I	109.5625	109-15/16"	100.2500	100-1/4"	BT277	
BT-0109-5I5I	112.0625	112-1/16"	98.1875	98-3/16"	BT109	CUMMINS 179-4759-01
BT-0011-6T	112.3750	112-3/8"	91.5000	91-1/2"	BT11	
BT-0268-8I	116.1250	116-1/8"	100.1250	100-1/2"	BT268	180-4423-01
BT-0114-6Y	116.3750	116-3/8"	100.0000		BT114	IEA ECO60581
BT-0168-8I8I	120.5000	120-1/2"	104.5000	104-1/2"	BT168	CAT 3516, Young Touchstone 417309
BT-0248-8I8I	121.1250	121-1/8"	108.0000	108"	BT248	GM28643
BT-0085-8X	128.3750	128-3/8"	127.0000		BT85	
BT-0259-8I8I	129.7500	129-3/4"	124.1250	124-1/8"	BT259	
BT-0201-5I7I	133.0000	133"	119.5000	119-1/2"	BT201	
CRH-50-4RT-3-6	133.1250	133-1/8"	68.1250	69-1/8"	CR3	
BT-0247-7T	172.75	172-3/4	34.2100		BT247	

The products in this catalog are arranged in 3 categories as follows:

Section 1 Solder together obsolete OE replacement radiators, **Pages ST1-ST668**

Section 2 Bolt together obsolete OE replacement radiators, **Pages BT1-BT301**

Section 3 Custom remote radiators, **Pages CR1-CR4**

If you cannot find a match to your radiator or cooler, please fill in the dimension sheet on the last page and call BGR Radiator.
We will be glad to offer a solution to quickly get you back in business.

Telephone: 1.800.774.2168
Email: sales@bgrradiator.com

BGR Part Number: ST-0001-3VTU-B
OEM: Covrad S9043-913-00-1063, 120-040

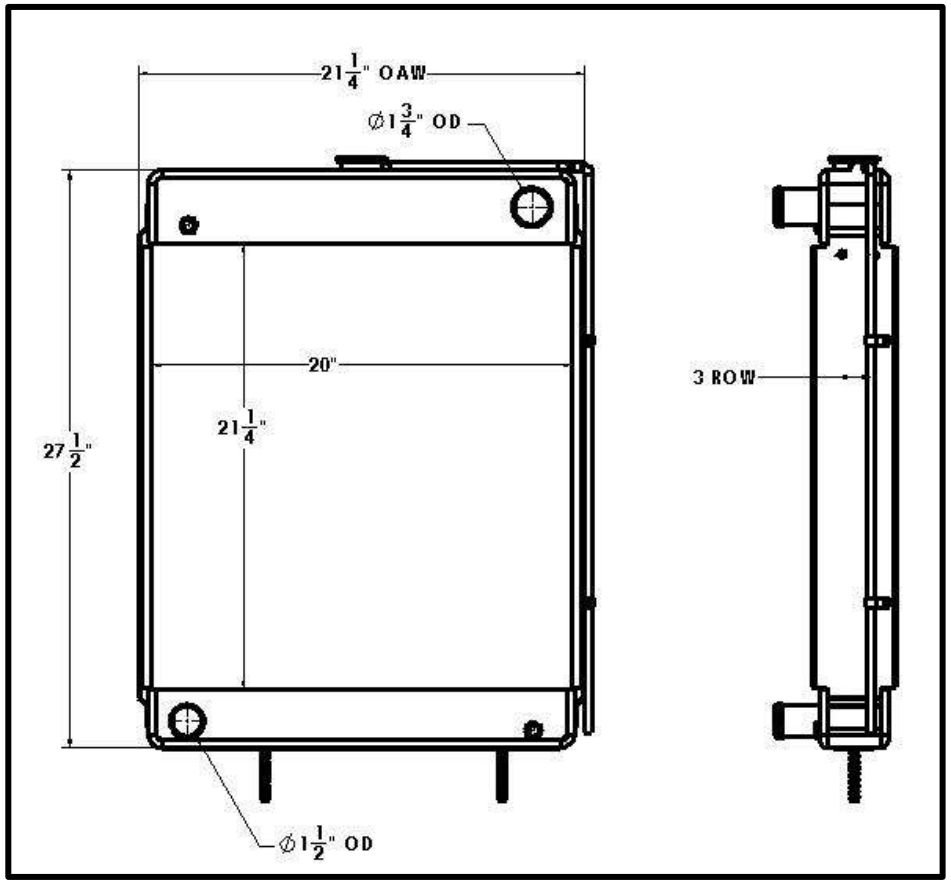

Overall Dimensions : 27-1/2” X 21-1/4” X 4”
Core: 21-1/4” X 20” X 3 Row
Inlet: 1-3/4” OD
Outlet: 1-1/2” OD

Tel 1.800.774.2168
www.bgrradiator.com

BGR Part Number: ST-0002-3R-F
ONAN Part Number: 130-0961-Revision M

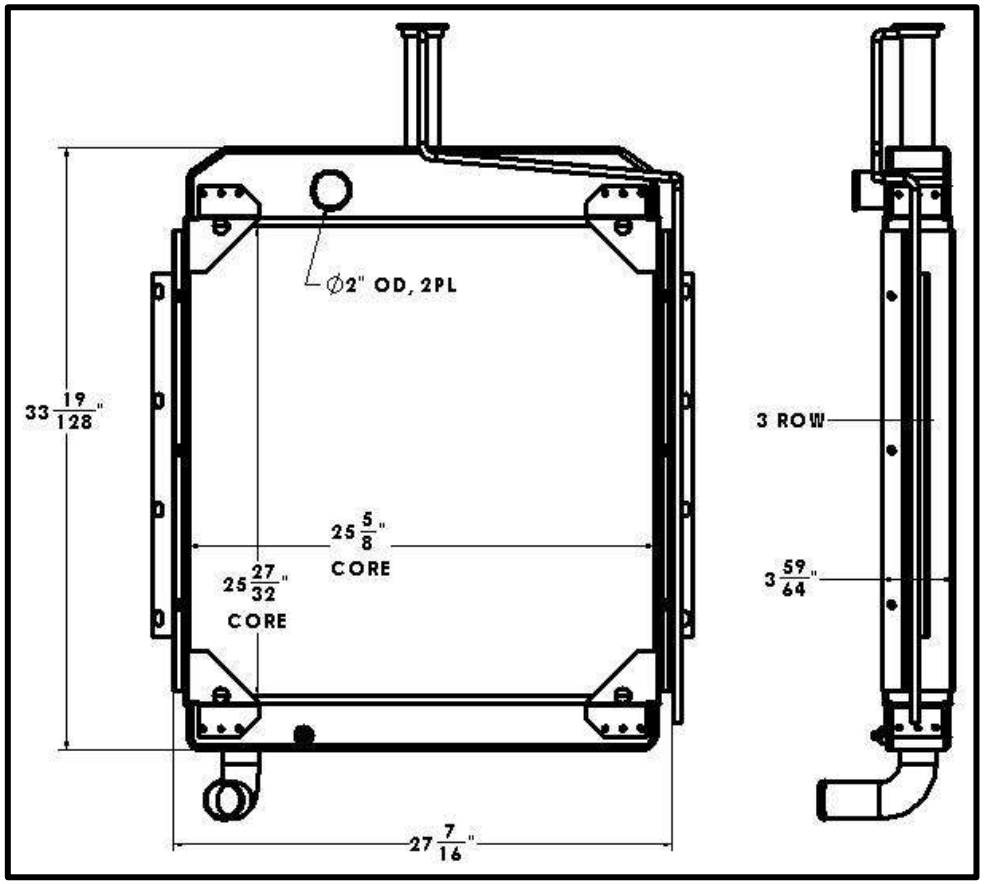

Overall Dimensions: 33-19/128” X 27-7/16” X 3-59/64”
CORE: 25-27/32” X 25-5/8” X 3 ROW
Inlet: 2” OD
Outlet: 2” OD

Listed dimensions may vary slightly from OE

BGR Part Number: ST-0003-5R-NC
OEM: KOHLER GM19944

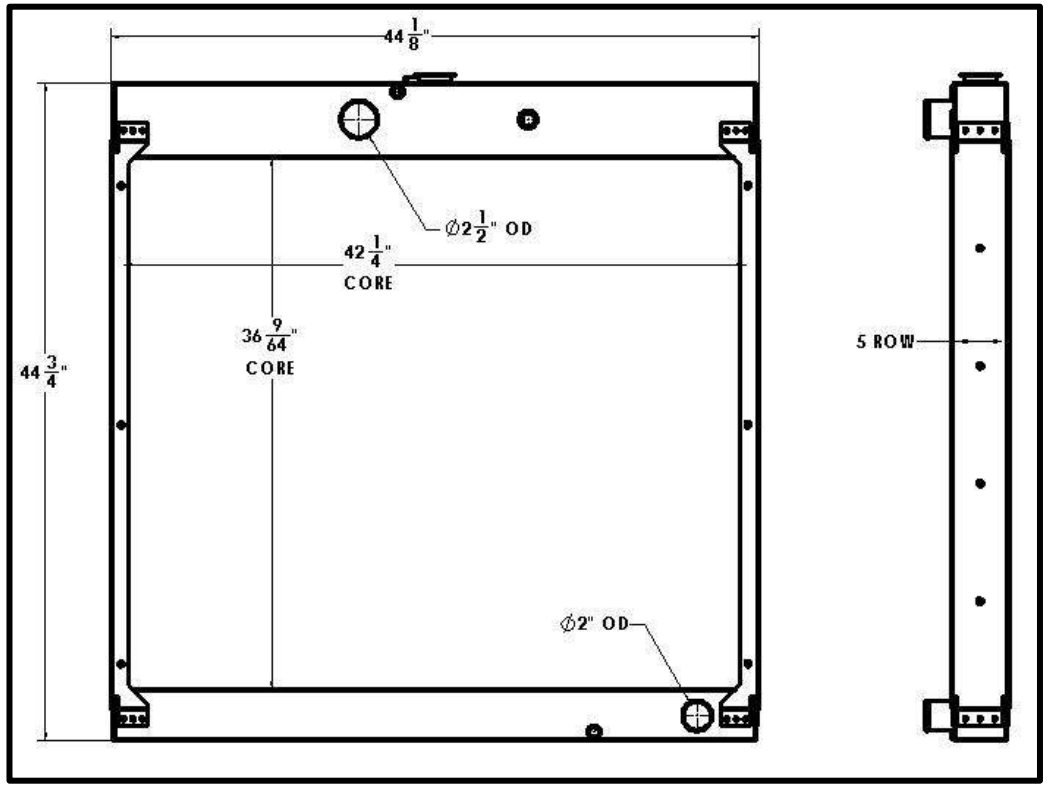

Overall Dimensions : 44-3/4” X 44-1/8” X 3-15/16”
Core: 36-9/64” X 42-1/4” X 5 Row
Inlet: 2-1/2” OD
Outlet: 2” OD

Tel 1.800.774.2168
www.bgrradiator.com

BGR Part Number: ST-0004-4R-FM

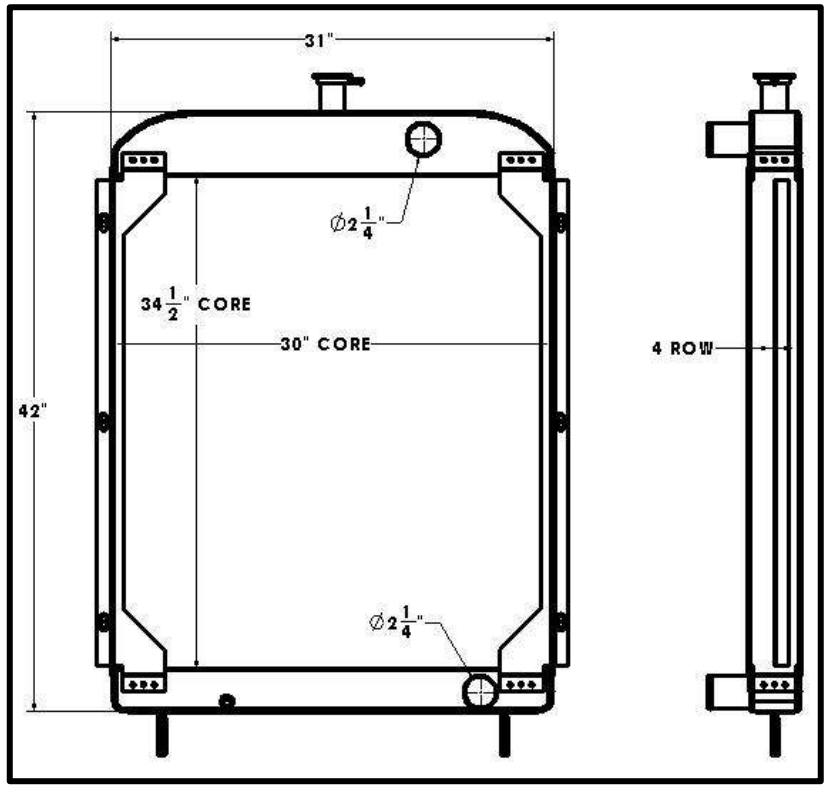

Overall Dimensions : 42” X 31” X 3-3/4”
Core: 34-1/2” X 30” X 4 Row
Inlet: 2-1/4” OD
Outlet: 2-1/4” OD

Listed dimensions may vary slightly from OE

BGR Part Number: ST-0005-8R-FM
OEM: YT 304572

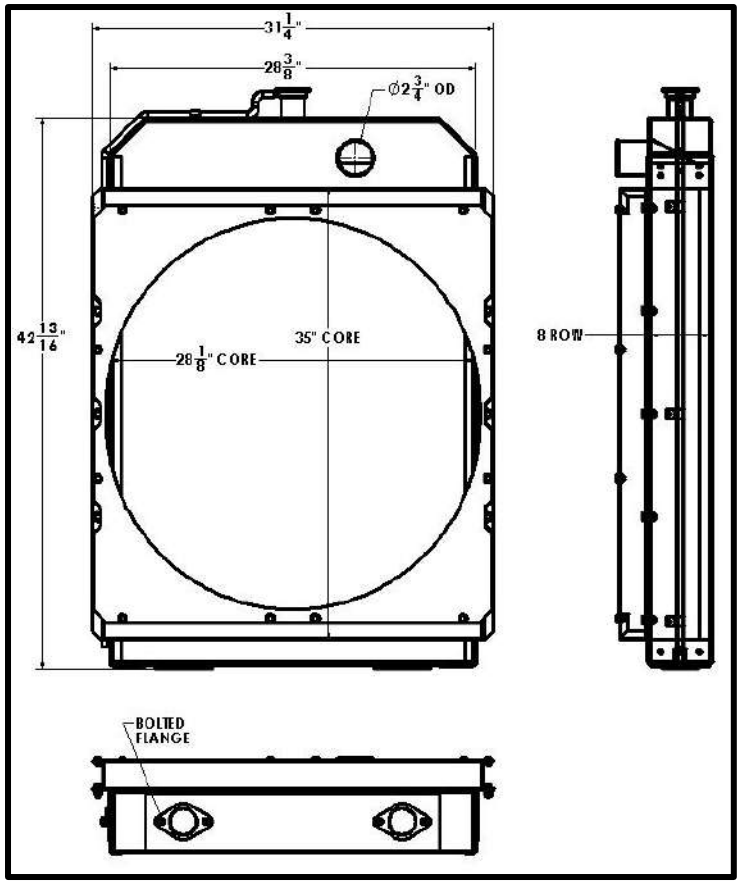

Overall Dimensions : 42-13/16” X 31-1/4” X 7-1/16”
Core: 35” X 28-1/8” X 8 Row
Inlet: 2-3/4” OD
Outlet: Bolted Flange (2 Places)
Available with or w/out Shroud

Tel 1.800.774.2168
www.bgrradiator.com

BGR Part Number: ST-0006-5R-F
ONAN PART NUMBER 130-3158

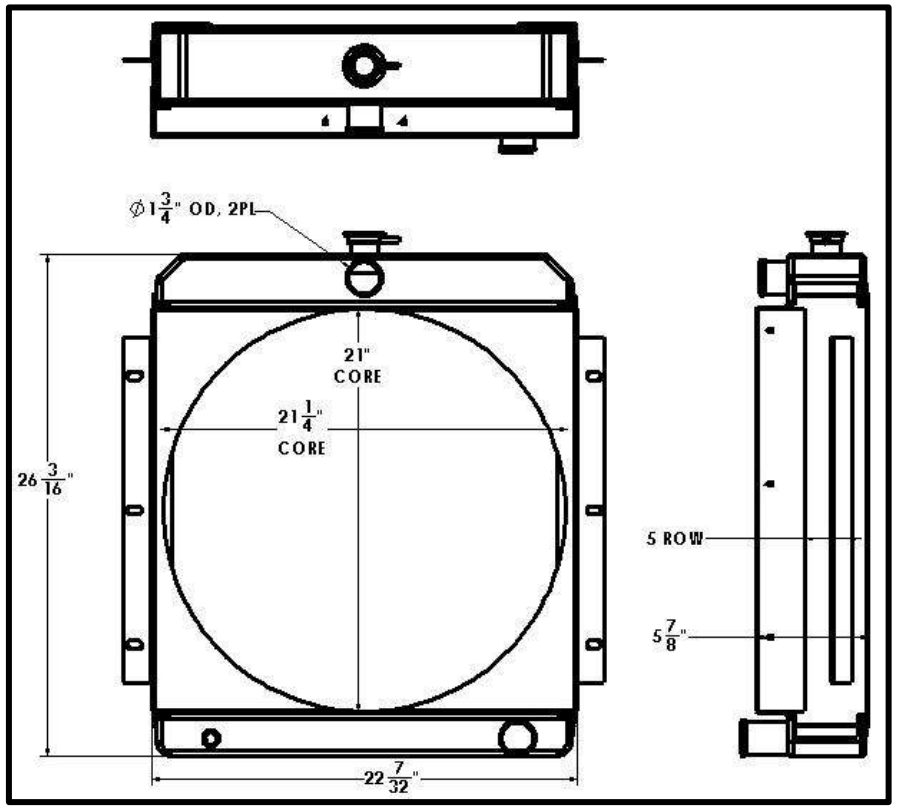

Overall Dimensions : 26-3/16” X 22-7/32” X 5-7/8”
Core: 21” X 21-1/4” X 5 Row
Inlet: 1-3/4” OD
Outlet: 1-3/4” OD

Listed dimensions may vary slightly from OE

BGR Part Number: ST-0007-8R-NC
OEM:

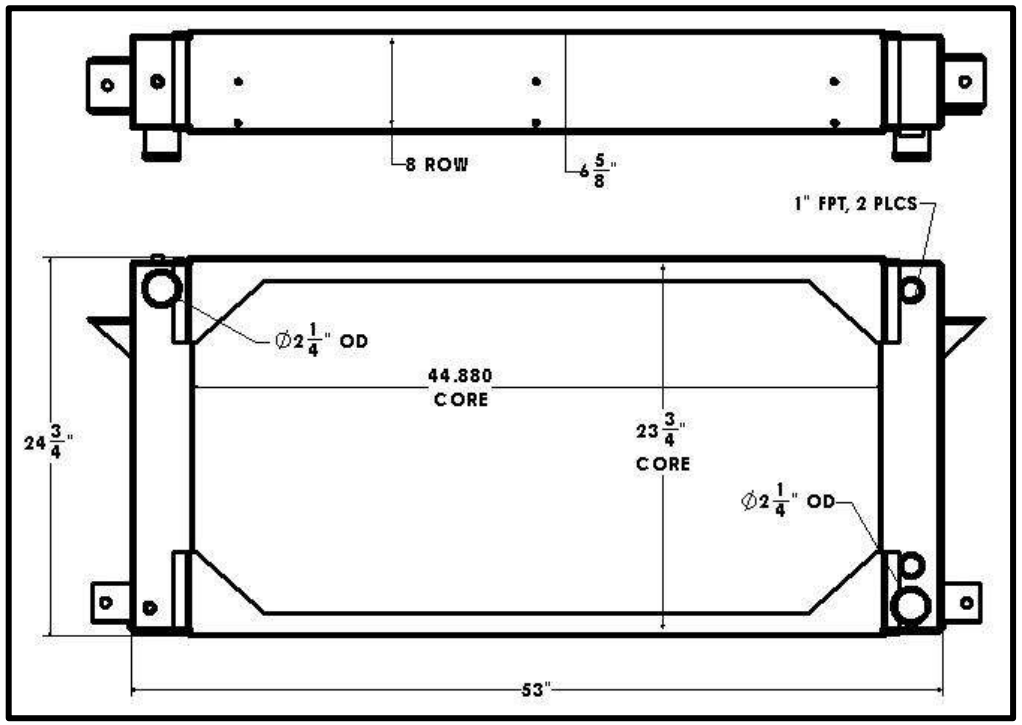

Overall Dimensions : 53” X 24-3/4” X 6-5/8”
Core: 44-7/8” X 23-3/4” X 8 Row
Inlet: 2-1/4” OD
Outlet: 2-1/4” OD

Tel 1.800.774.2168
www.bgrradiator.com

BGR Part Number: ST-0008-4R-NC
OEM:

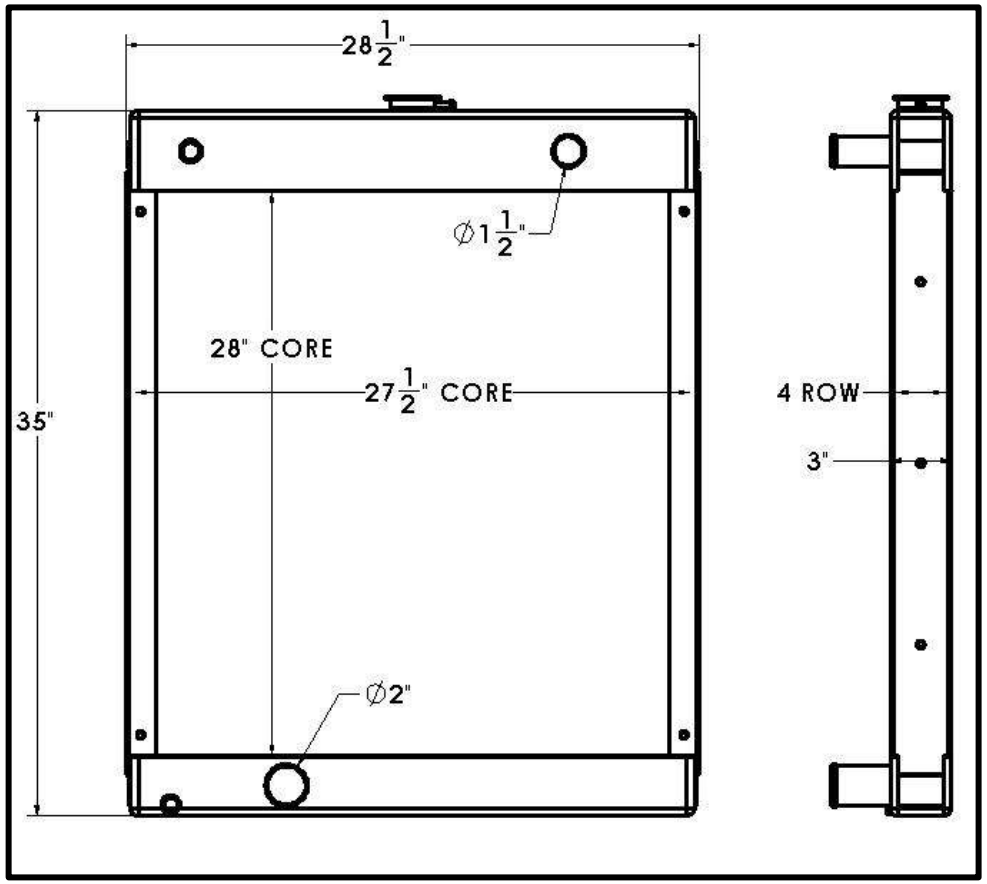

Overall Dimensions : 35” X 28-1/2” X 3”
Core: 28” X 27-1/2” X 4 Row
Inlet: 1-1/2” OD
Outlet: 2” OD

Listed dimensions may vary slightly from OE

BGR Part Number: ST-0009-5R-NC
CATERPILLAR 7C8627, 613-5133

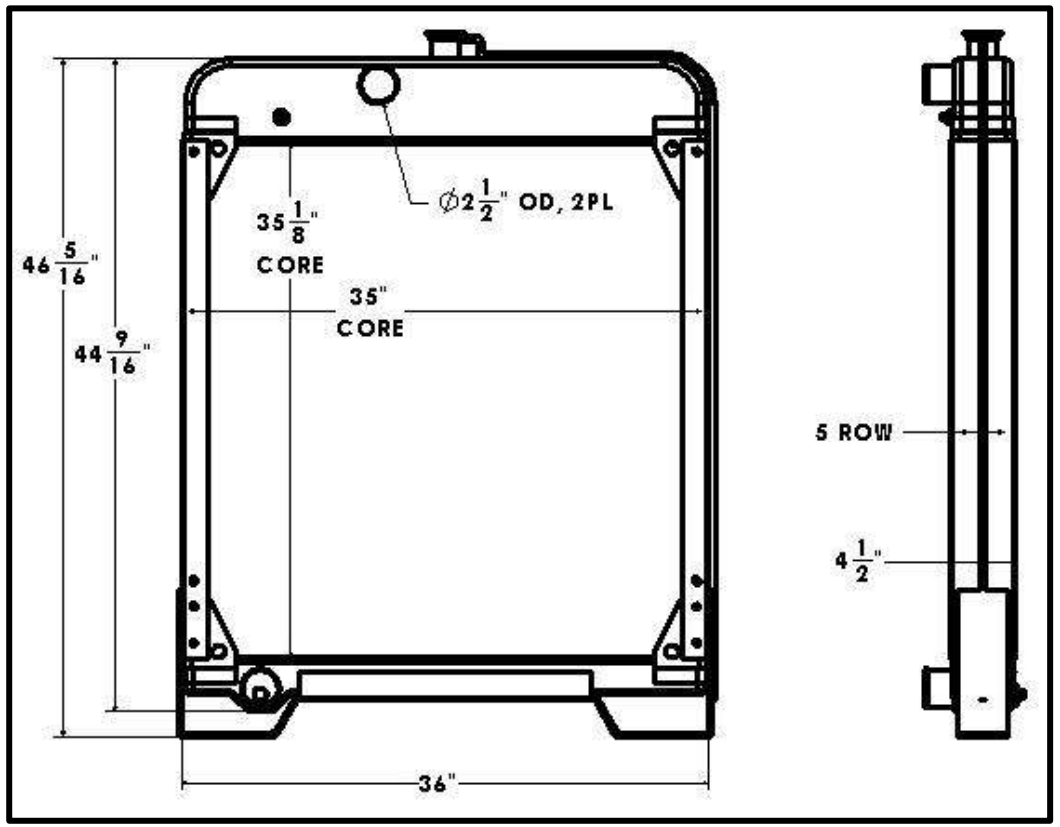

Overall Dimensions : 46-5/16” X 36” X 4-1/2”
Core: 35-1/8” X 35” X 5 Row
Inlet: 2-1/2” OD
Outlet: 2-1/2” OD

Tel 1.800.774.2168
www.bgrradiator.com

BGR Part Number: ST-0010-3VT-FM
OEM:

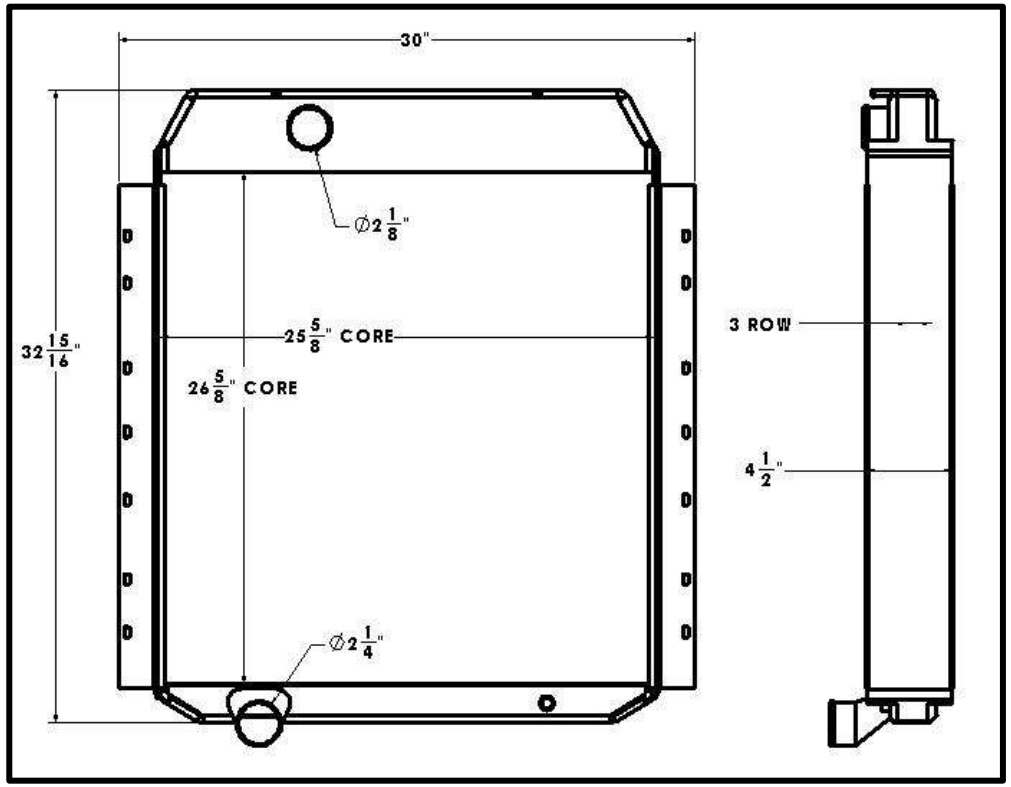

Overall Dimensions : 32-15/16” X 30” X 4-1/2”
Core: 26-5/8” X 25-5/6” X 3 Row
Inlet: 2-1/8” OD
Outlet” 2-1/4” OD

Listed dimensions may vary slightly from OE

BGR Part Number: ST-0011-6R-BK
OEM: Fire Truck

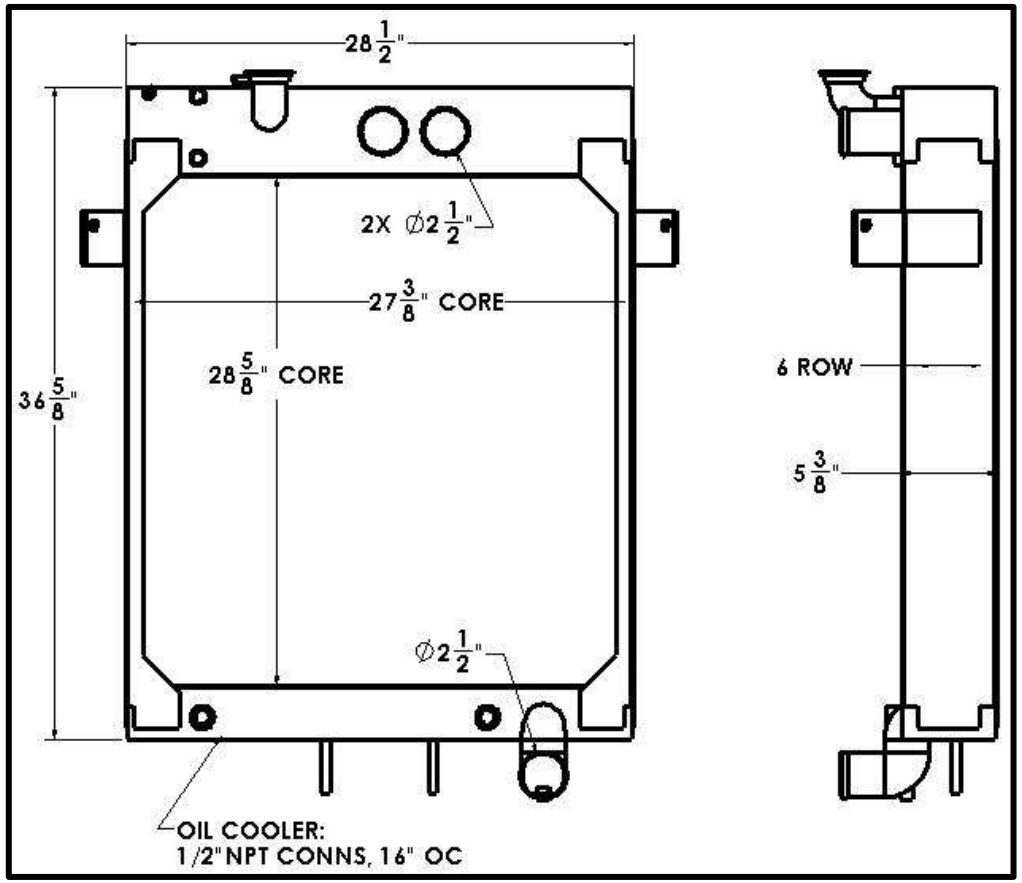

Overall Dimensions : 36-5/8” X 28-1/2” X 5-3/8”
Core: 28-5/8” X 27-3/8” X 6 Row
Inlet: 2-1/2” OD (2 Places)
Outlet: 2-1/2” OD

Tel 1.800.774.2168
www.bgrradiator.com

BGR Part Number: ST-0012-4L-FM
OEM:

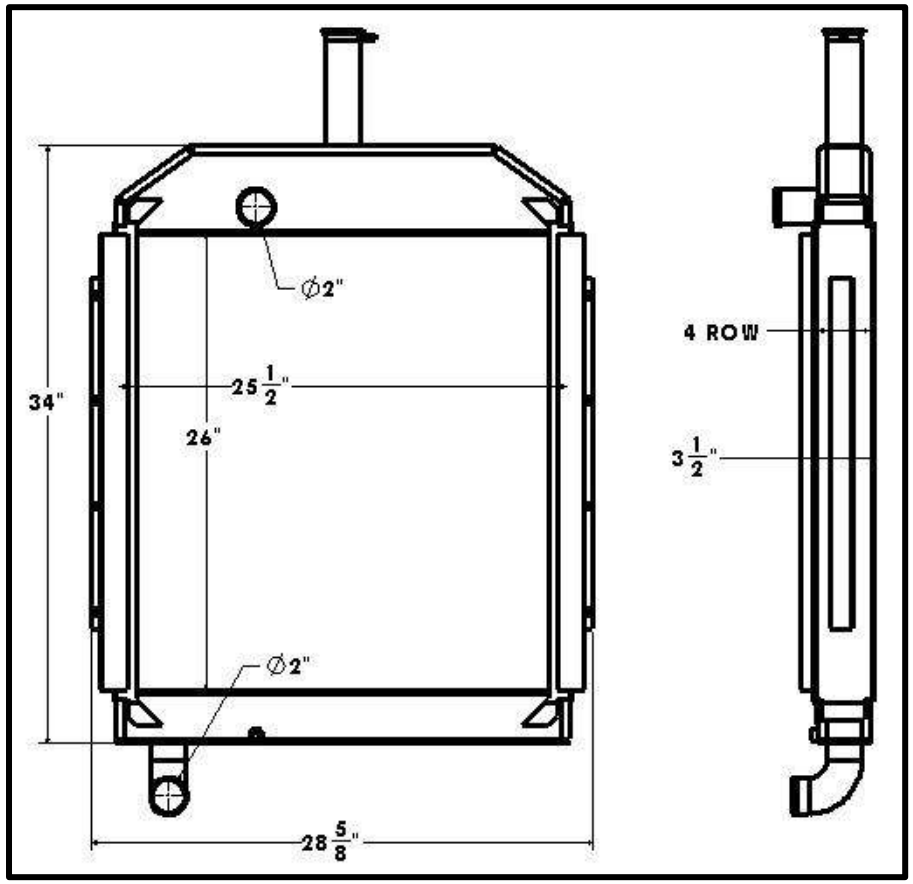

Overall Dimensions : 34” X 28-5/8” X 3-1/2”
Core: 26” X 25-1/2” X 4 Row
Inlet: 2” OD
Outlet: 2” OD

Listed dimensions may vary slightly from OE

BGR Part Number: ST-0013-5N-EF
OEM:

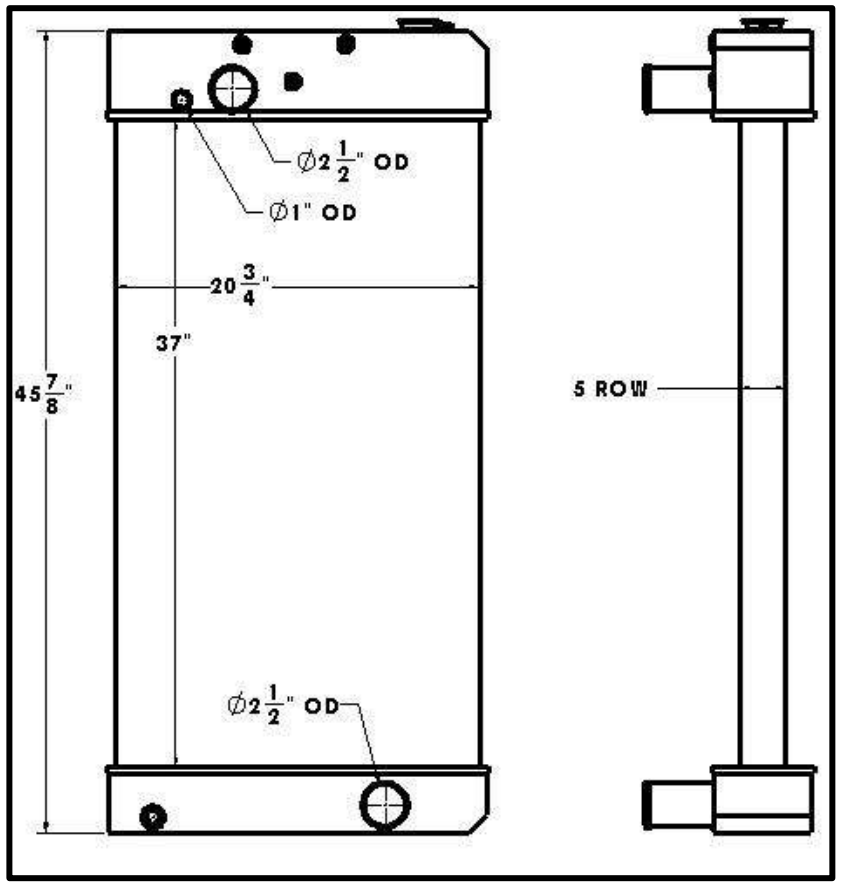

Overall Dimensions : 45-7/8” X 20-3/4” X 5-5/8”(Tanks)
CORE: 37” X 20-3/4” X 5 ROW
Inlet: 2-1/2” OD
Outlet: 2-1/2” OD
Complimentary Charge Air Cooler: 02-0002

Tel 1.800.774.2168
www.bgrradiator.com

BGR Part Number: ST-0014-6R-FM
OEM:

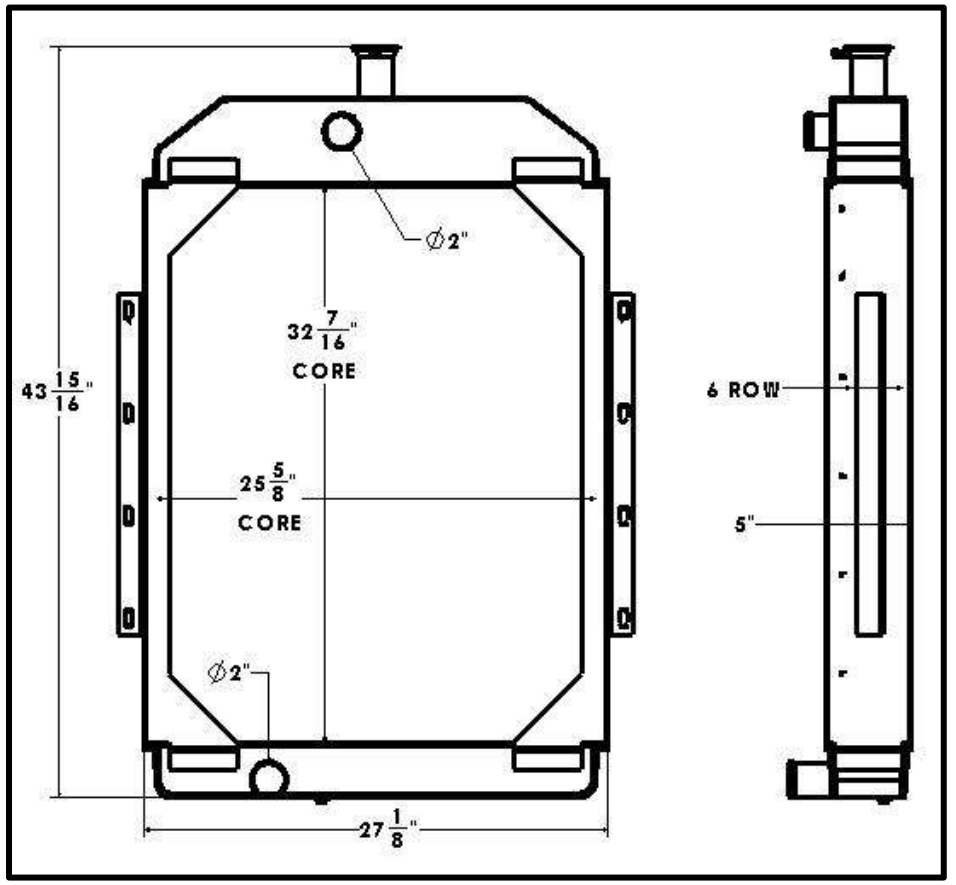

Overall Dimensions : 43-15/16” X 27-1/8” X 5”
Core: 32-7/16” X 25-5/8” X 6 Row
Inlet: 2” OD
Outlet: 2” OD

Listed dimensions may vary slightly from OE

BGR Part Number: ST-0015-5R-FM
OEM:

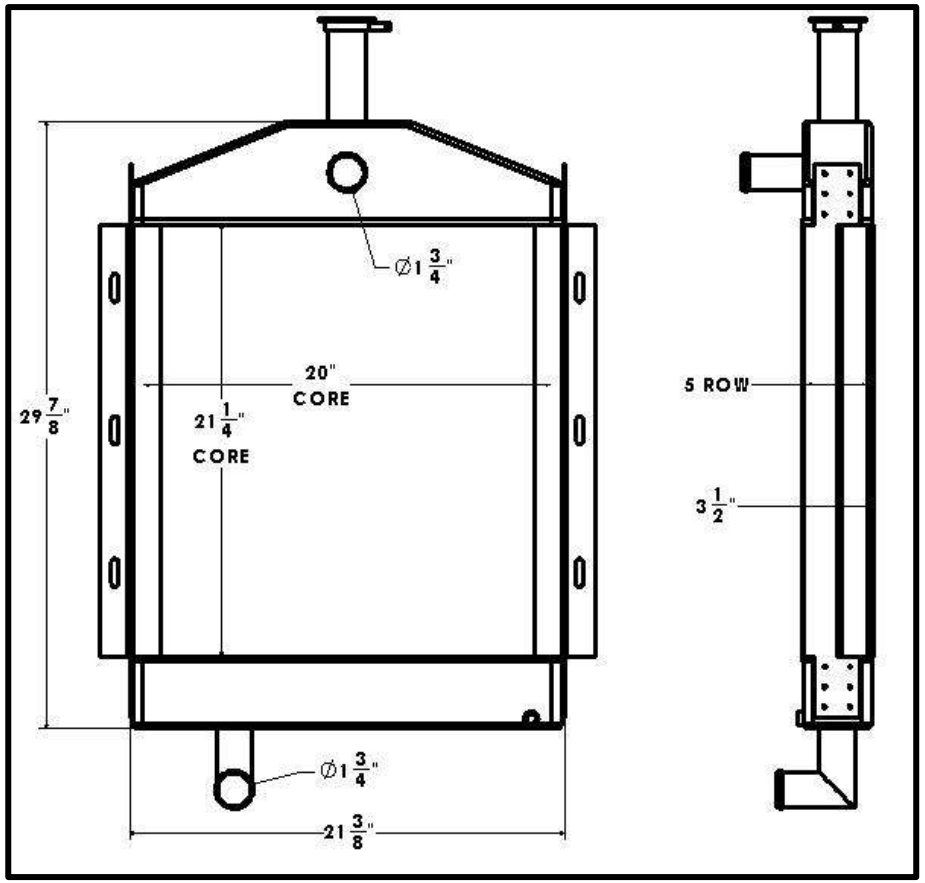

Overall Dimensions : 29-7/8” X 21-3/8” X 3-1/2”
Core: 21-1/4” X 20” X 5 Row
Inlet: 1-3/4” OD
Outlet: 1-3/4” OD

Tel 1.800.774.2168
www.bgrradiator.com

BGR Part Number: ST-0016-4R-NC
ONAN PART NUMBER 130-4358 Supersedes 130-3144

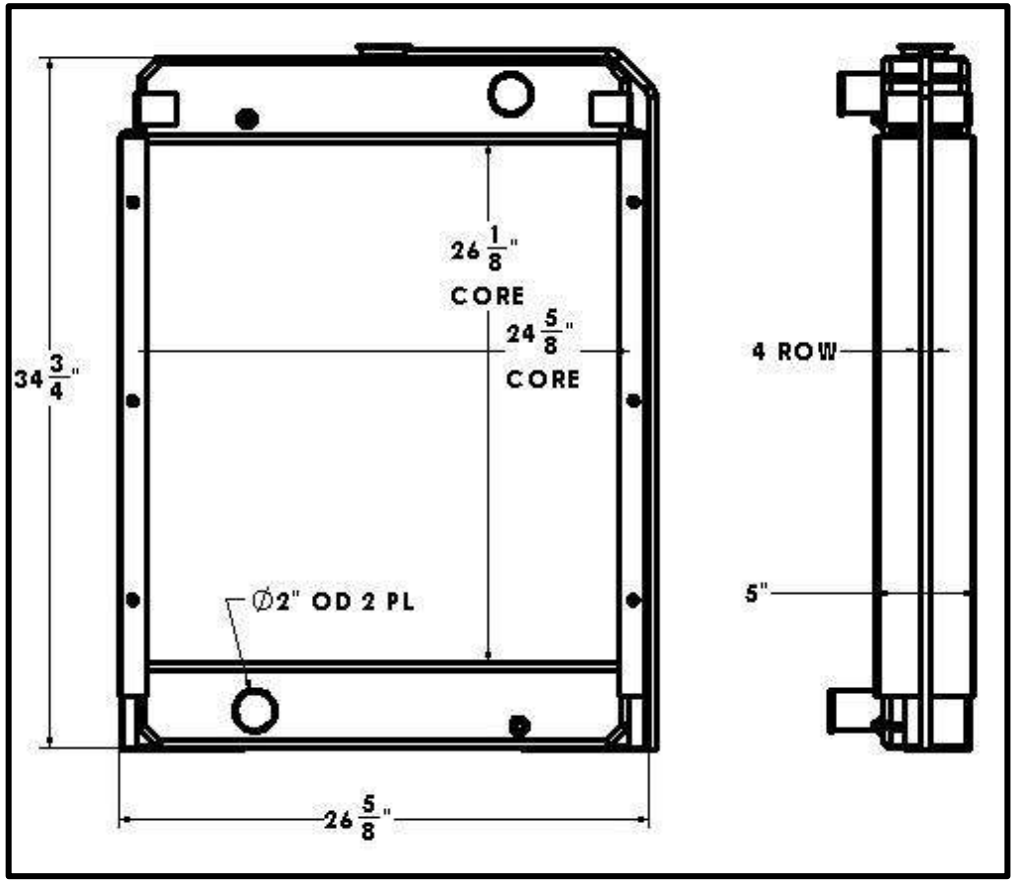

Overall Dimensions: 34-3/4” X 26-5/8” X 5”
Core: 26-1/8” X 24-5/8” X 4 Row
Inlet: 2” OD
Outlet: 2” OD

Listed dimensions may vary slightly from OE

BGR Part Number: ST-0017-4T-FM
OEM:

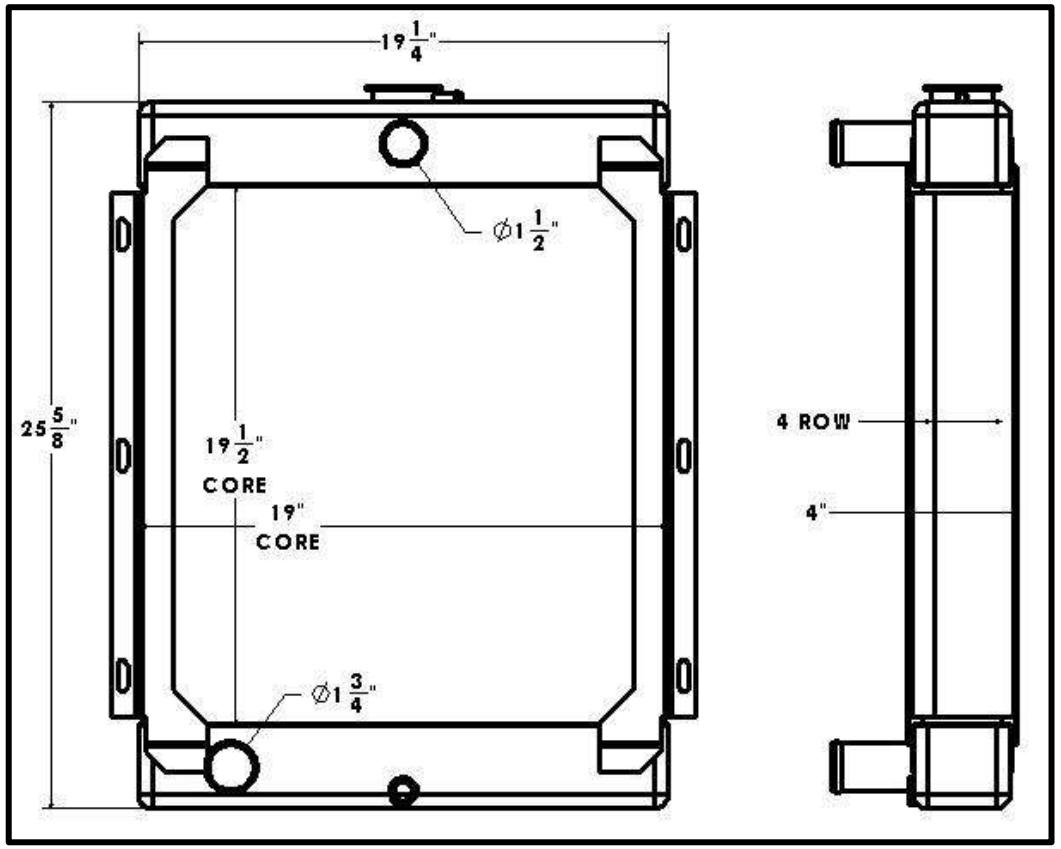

Overall Dimensions : 28-5/8” X 19-1/4” X 4”
Core: 19-1/2” X 19” X 4 Row
Inlet: 1-1/2” OD
Outlet: 1-3/4” OD

Tel 1.800.774.2168
www.bgrradiator.com

BGR Part Number: ST-0018-4R-NC
OEM: 1A14434 130-3207

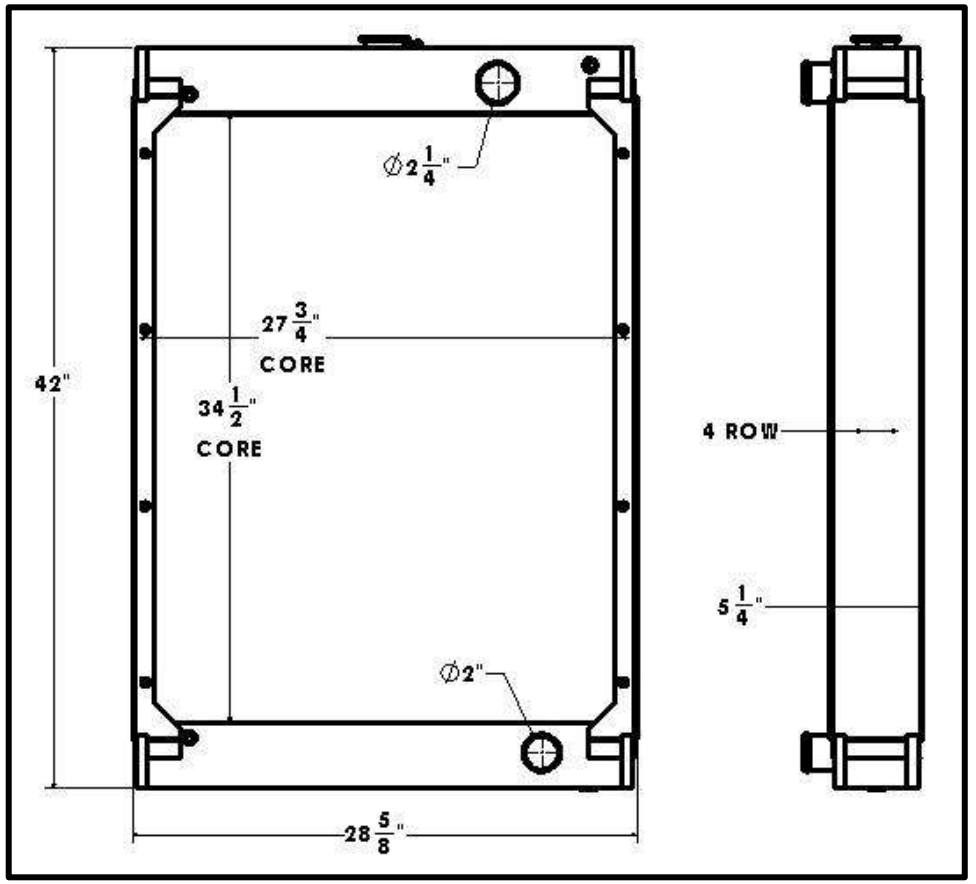

Overall Dimensions : 42” X 28-5/8” X 5-1/4”
Core: 34-1/2” X 27-3/4” X 4 Row
Inlet: 2-1/4” OD
Outlet: 2” OD

Listed dimensions may vary slightly from OE

BGR Part Number: ST-0019-6R-F
OEM: 1018593

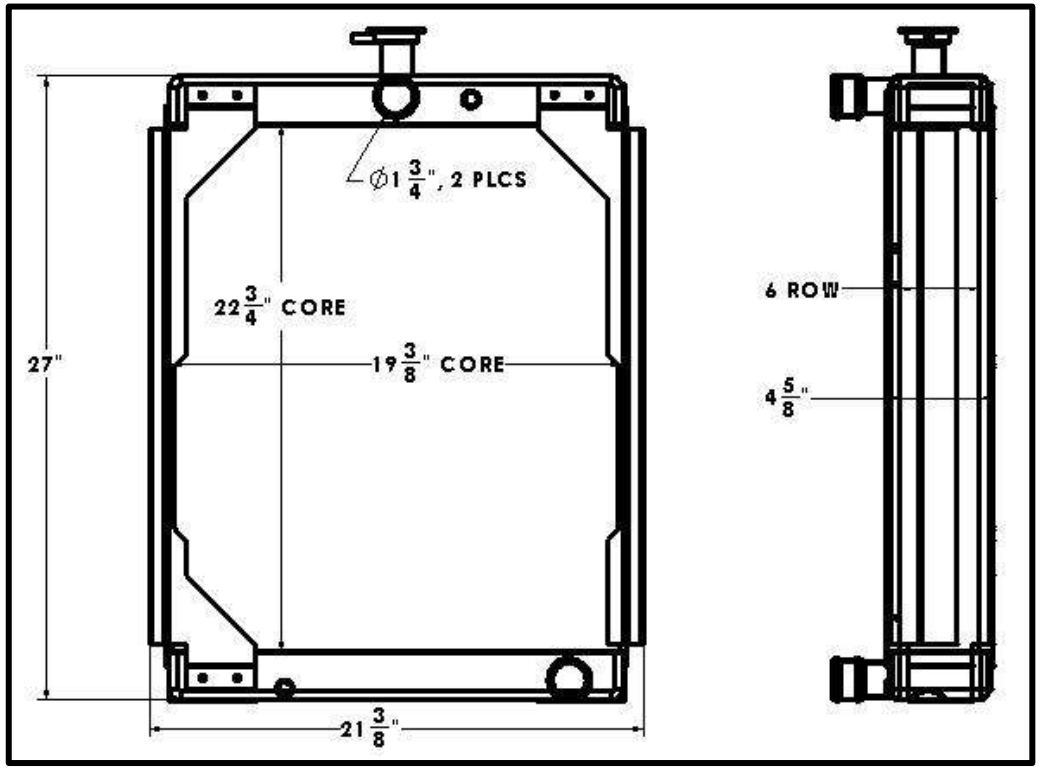

Overall Dimensions : 27” X 21-3/8” X 4-5/8”
Core: 22-3/4” X 19-3/8” X 6 Row
Inlet: 1-3/4” OD
Outlet: 1-3/4” OD

Tel 1.800.774.2168
www.bgrradiator.com

BGR Part Number: ST-0020-2SLK-EF
OEM:

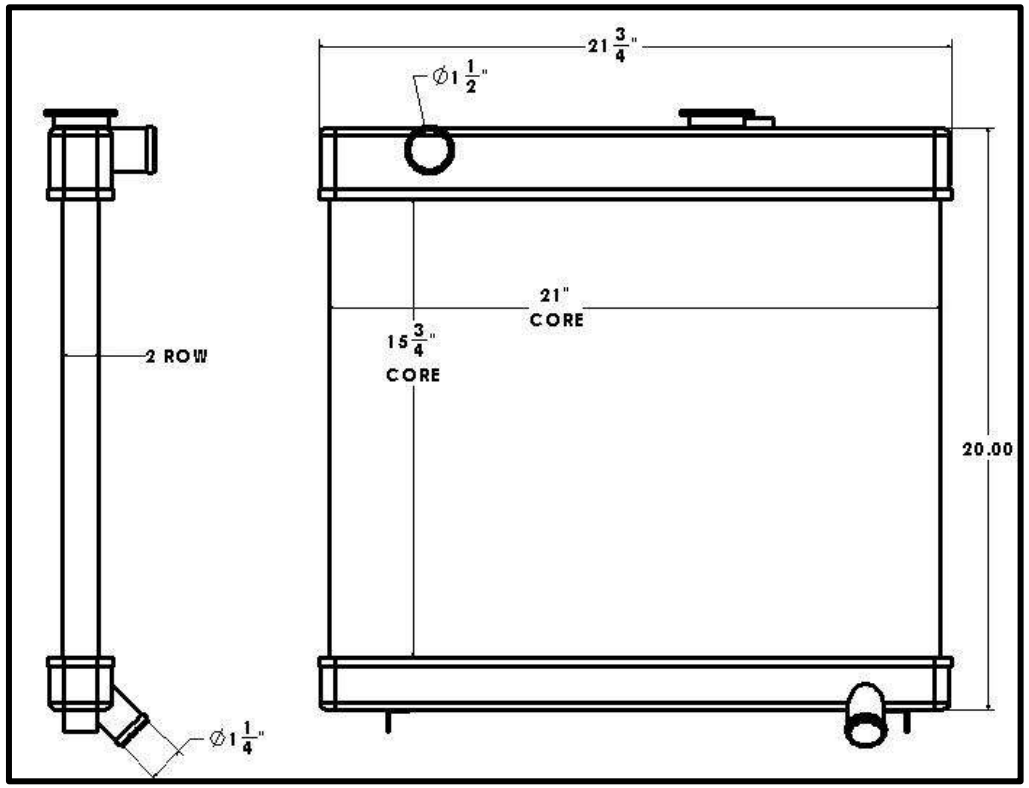

Overall Dimensions : 20” X 21-3/4” X 2-1/4” (Tanks)
Core: 15-3/4” X 21” X 2 Row
Inlet: 1-1/2” OD
Outlet: 1-1/2” OD

Listed dimensions may vary slightly from OE

BGR Part Number: ST-0021-4R-F
OEM: ONAN 45kw

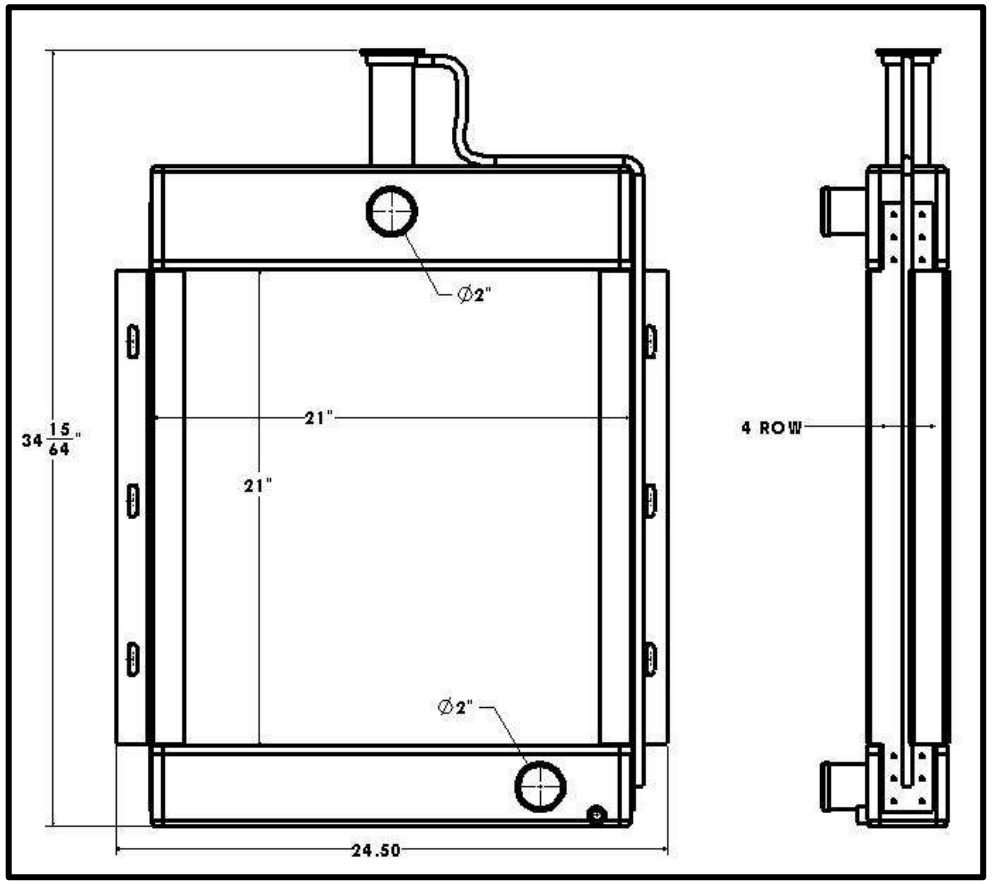

Overall Dimensions: 29-1/8” X 21-1/4” X 3-5/8”
Core: 21” X 21” X 4 Row
Inlet: 2” OD
Outlet: 2” OD

Tel 1.800.774.2168
www.bgrradiator.com

BGR Part Number: ST-0022-4R-NC
ONAN PART NUMBER 130-2519

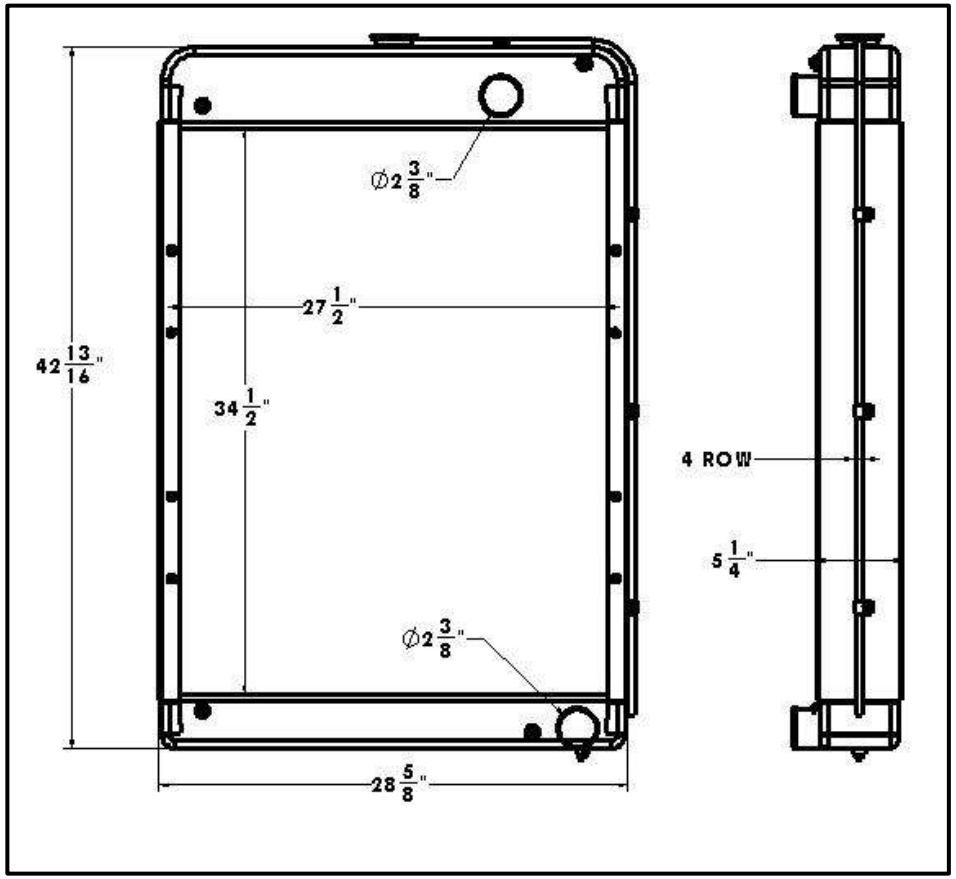

Overall Dimensions: 42-13/16” X 28-5/8” X 5-1/4”
Core: 34-1/2” X 27-1/2” X 4 ROW
Inlet: 2-3/8” OD
Outlet: 2-3/8” OD

Listed dimensions may vary slightly from OE

BGR Part Number: ST-0023-5R-F
ONAN PART NUMBER 130-1611

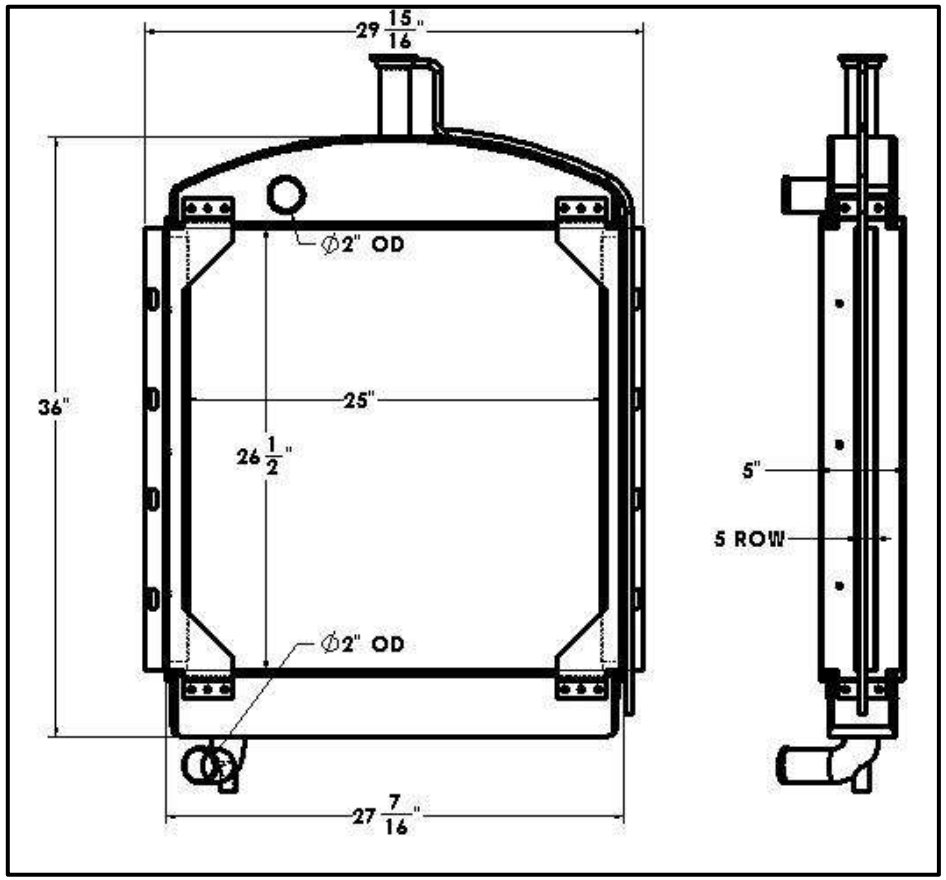

Overall Dimensions: 36” X 27-7/16” X 5”
Core: 26-1/2” X 25” X 5 ROW
Inlet: 2” OD
Outlet: 2” OD

Tel 1.800.774.2168
www.bgrradiator.com

BGR Part Number: ST-0024-4R-F
OEM:

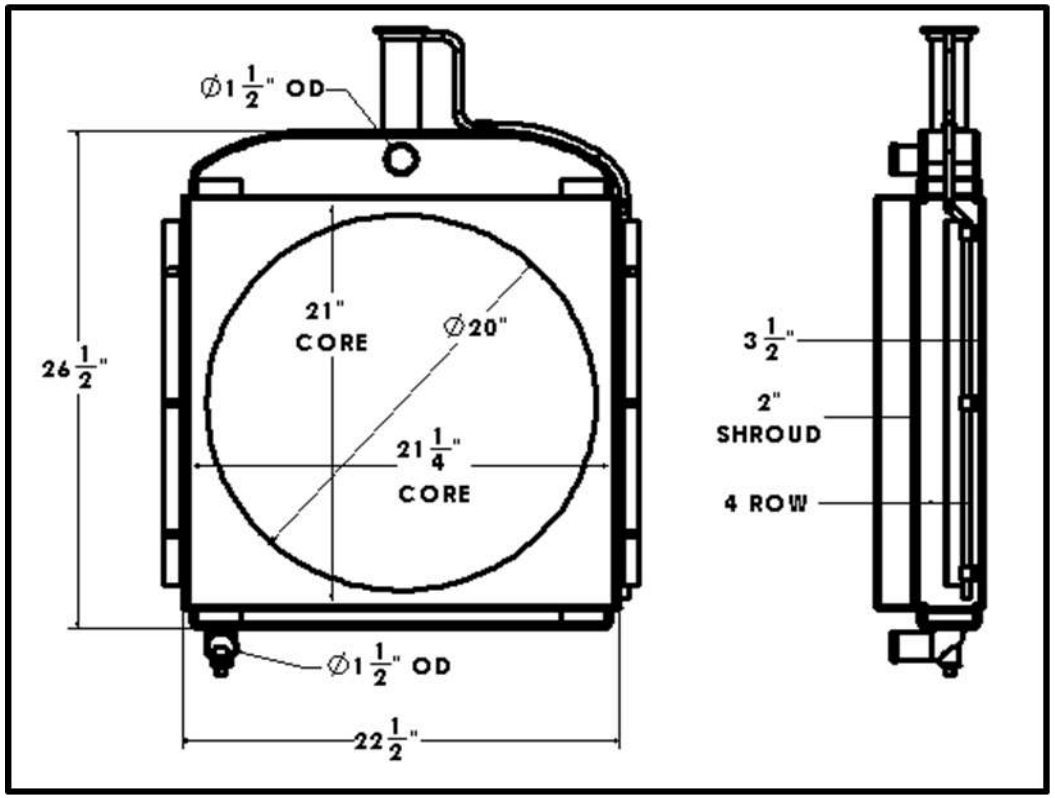

Overall Dimensions: 26-1/2” X 22-1/2” X 5-1/2”
Core: 21” X 21-1/4” X 4 Row
Inlet: 1-1/2” OD
Outlet: 1-1/2” OD
Available w/out Shroud

Listed dimensions may vary slightly from OE

BGR Part Number: ST-0025-4R-NC
OEM: A276469

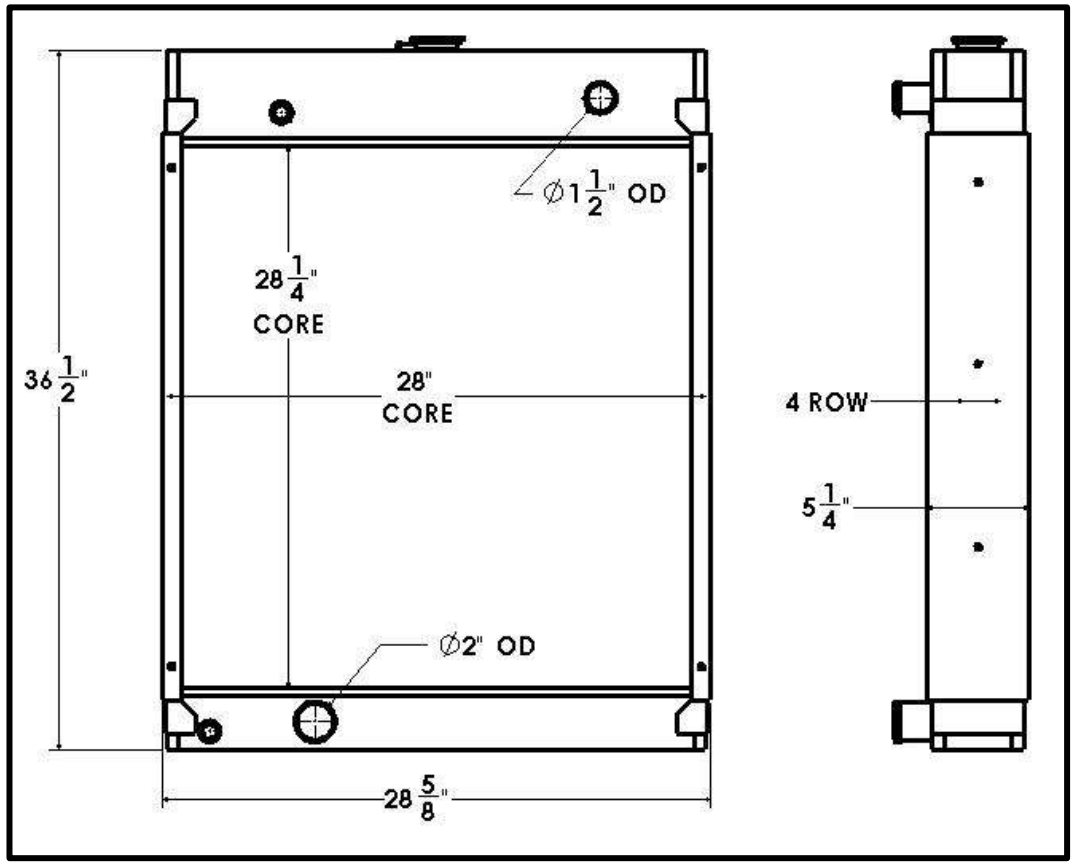

Overall Dimensions : 36-1/2” X 28-5/8” X 5-1/4”
Core: 28-1/4” X 28” X 4 Row
Inlet: 1-1/2” OD
Outlet: 2” OD

Tel 1.800.774.2168
www.bgrradiator.com

BGR Part Number: ST-0026-4R-NC
OEM: GM29698

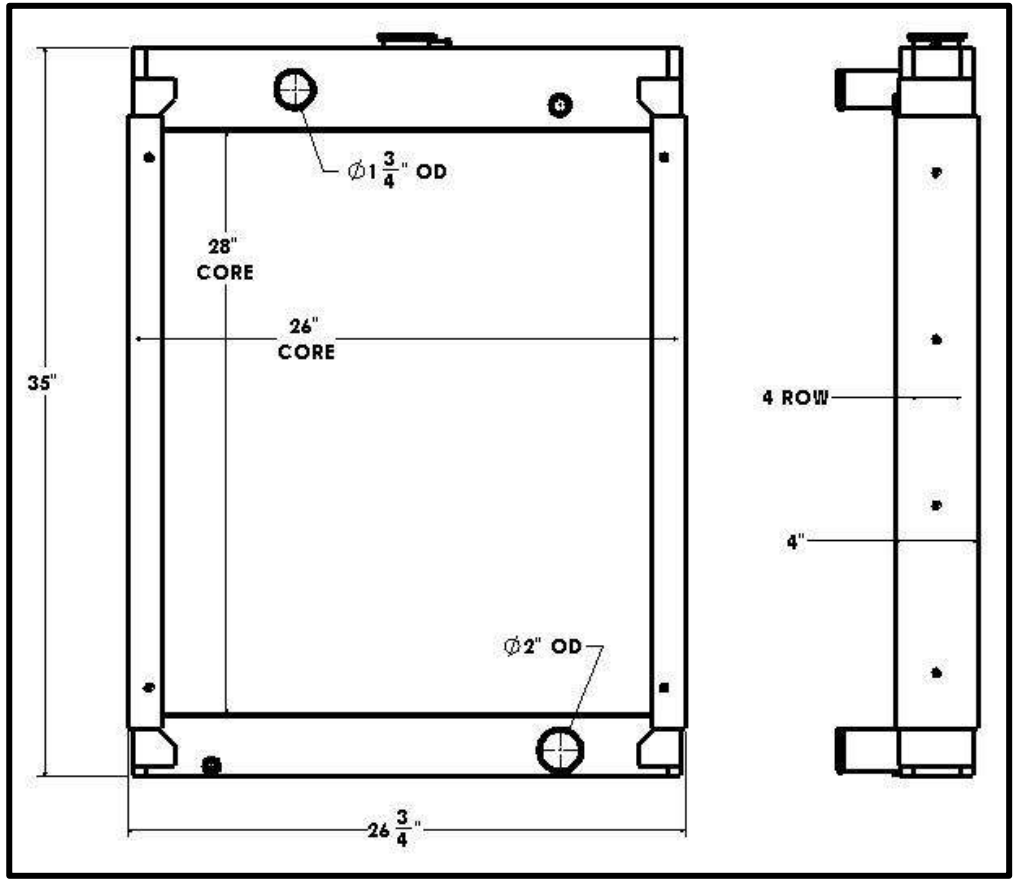

Overall Dimensions : 35” X 26-3/4” X 4”
Core: 28” X 26” X 4 Row
Inlet: 1-3/4” OD
Outlet: 2” OD

Listed dimensions may vary slightly from OE

BGR Part Number: ST-0027-6R-NC
OEM: A255763, Kohler 80ROZ272, Spec 187334-72N

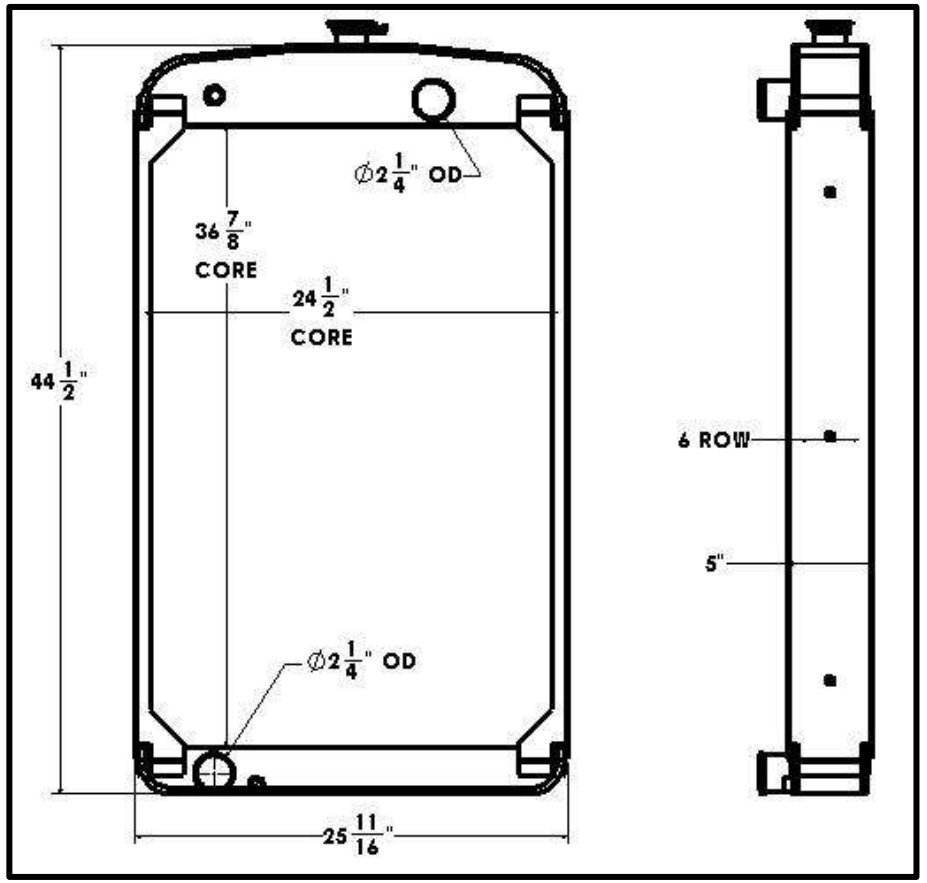

Overall Dimensions : 44-1/2” X 25-11/16” X 5”
Core: 36-7/8” X 24-1/2” X 6 Row
Inlet: 2-1/4” OD
Outlet: 2-1/4” OD

Tel 1.800.774.2168
www.bgrradiator.com

BGR Part Number: ST-0028-4R-NC
OEM: A326023

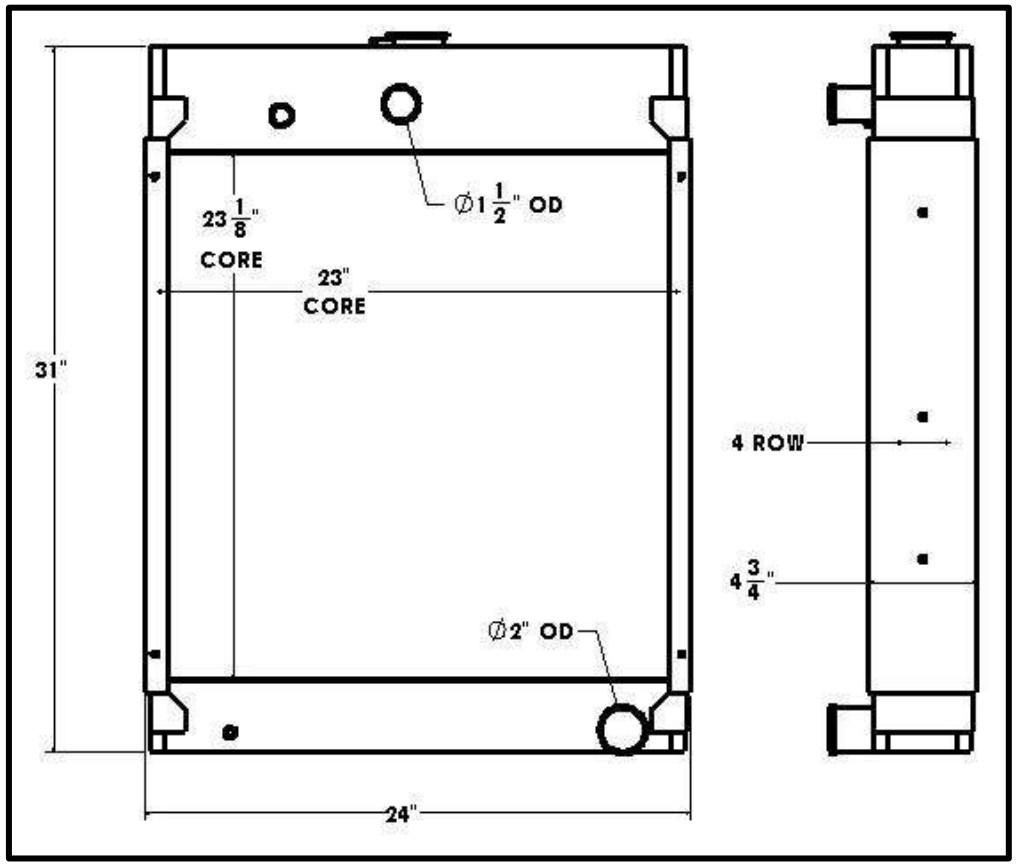

Overall Dimensions : 31” X 24” X 4-3/4”
Core: 23-1/8” X 23” X 4 Row
Inlet: 1-1/2” OD
Outlet: 2” OD

Listed dimensions may vary slightly from OE

BGR Part Number: ST-0029-5S-NC
OEM: A276522

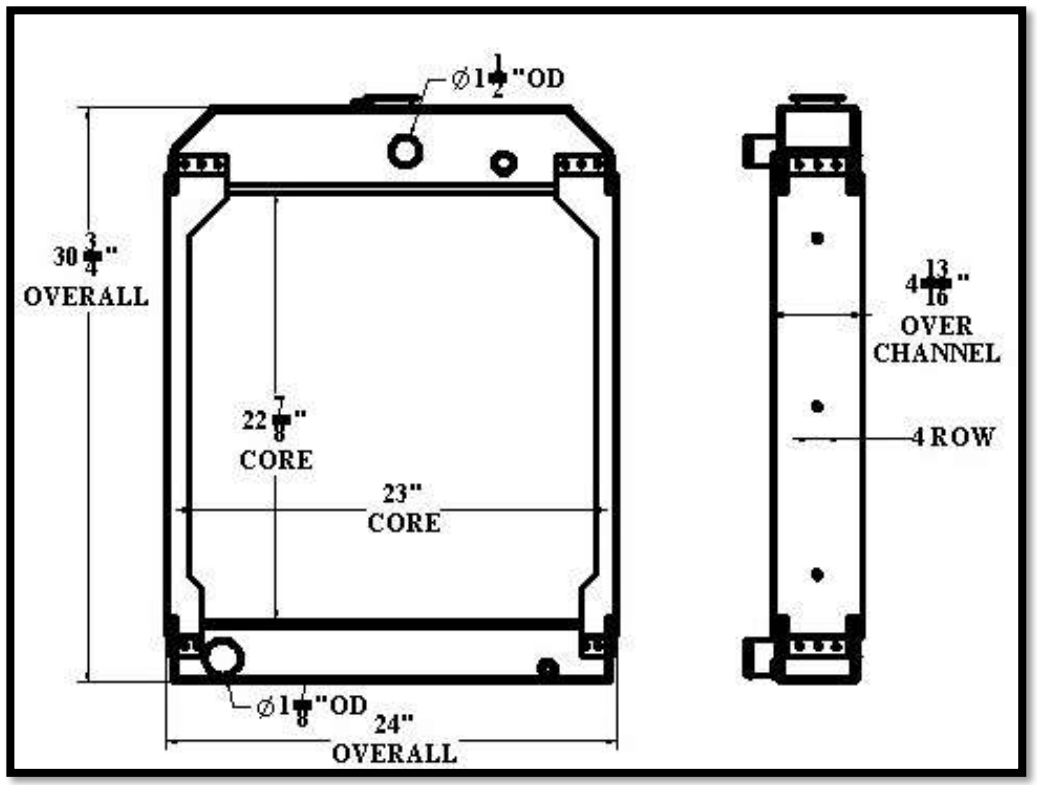

Overall Dimensions : 30-3/4” X 24” X 4-13/16”
Core: 22-3/4” X 22-1/2” X 5 Row
Inlet: 1-1/2” OD
Outlet: 1-7/8” OD

Tel 1.800.774.2168
www.bgrradiator.com

BGR Part Number: ST-0030-5LE-NC
ONAN PART NUMBER 130-3567

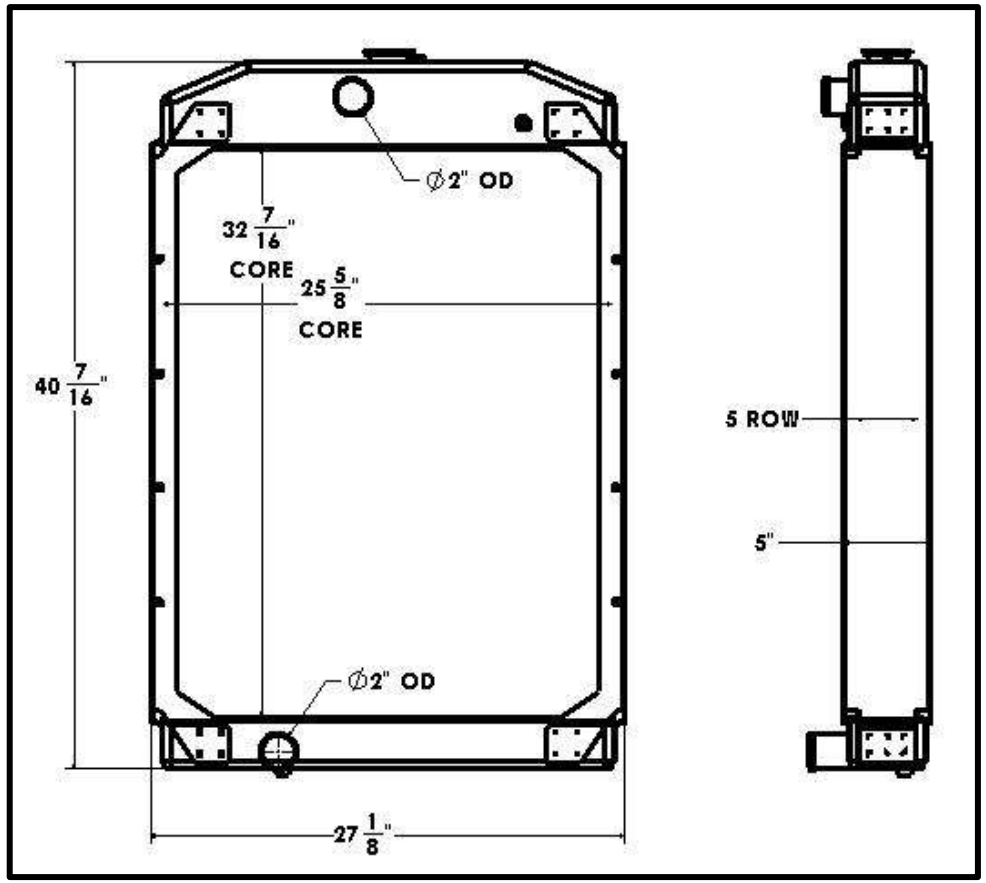

Overall Dimensions: 40-7/16” X 27-1/8” X 5”
Core: 32-7/16” X 25-5/8” X 5 Row
Inlet: 2” OD
Outlet: 2” OD

Listed dimensions may vary slightly from OE

BGR Part Number: ST-0031-4VH-NC
ONAN Part Number 130-4360

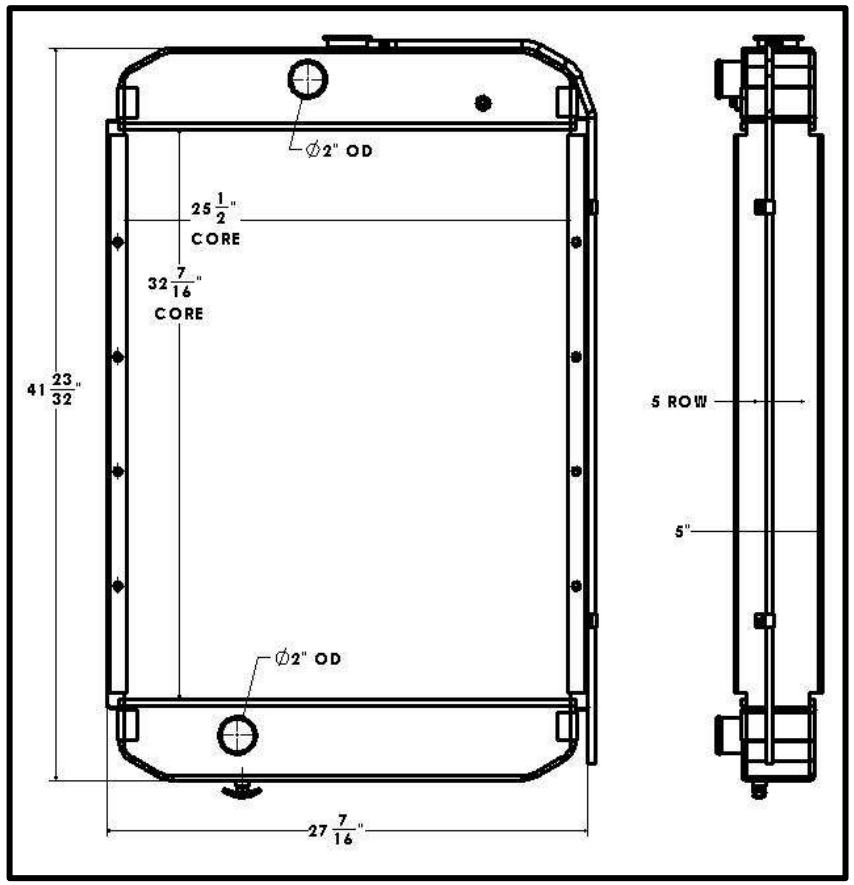

Overall Dimensions: 41-23/32” X 27-7/16” X 5”
Core: 32-7/16” X 25-1/2” X 5 Row
Inlet: 2”OD
Outlet: 2” OD

Tel 1.800.774.2168
www.bgrradiator.com

BGR Part Number: ST-0032-5R-F
ONAN Part Number 130-0809

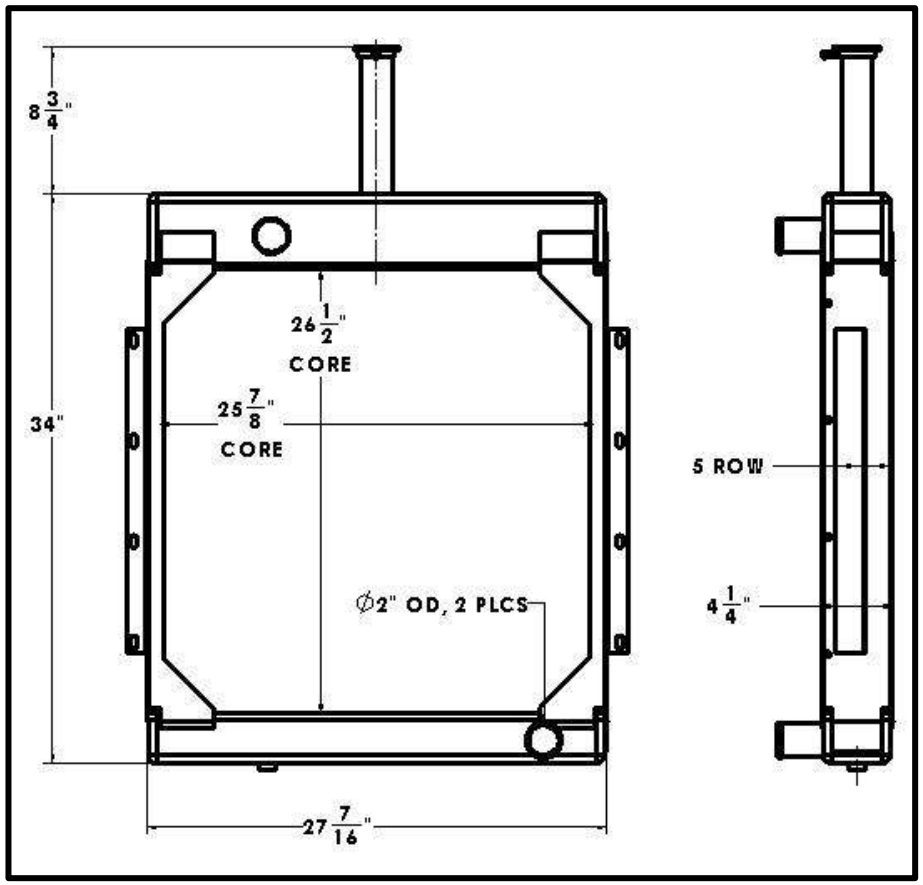

Overall Dimensions: 34” X 27-7/16” X 4-1/4”
Core: 26-1/2” X 25-7/8” X 5 Row
Inlet: 2” OD
Outlet: 2” OD

Listed dimensions may vary slightly from OE

BGR Part Number: ST-0033-4M-NC
ONAN Part Number 130-1818

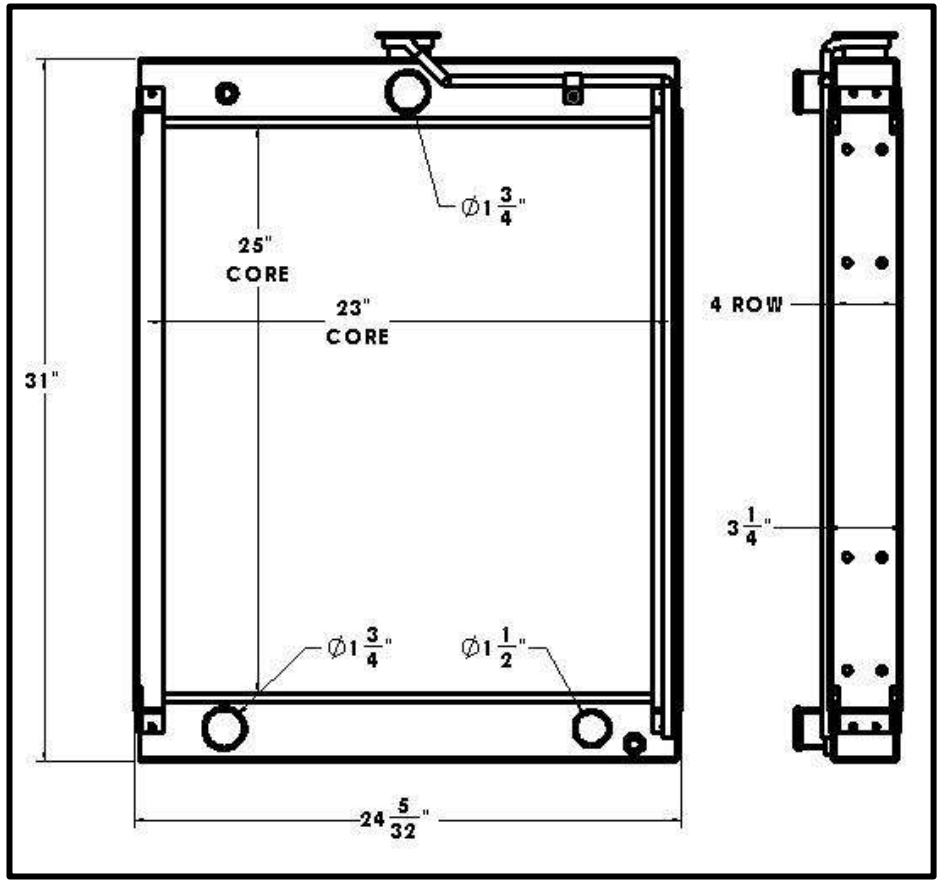

Overall Dimensions: 31” X 24-5/32” X 3-1/4”
Core: 25” X 23” X 4 Row
Inlet: 1-3/4” OD
Outlet: 1-3/4” OD,1-1/2” OD

Tel 1.800.774.2168
www.bgrradiator.com

BGR Part Number: ST-0034-4I-F
OEM:

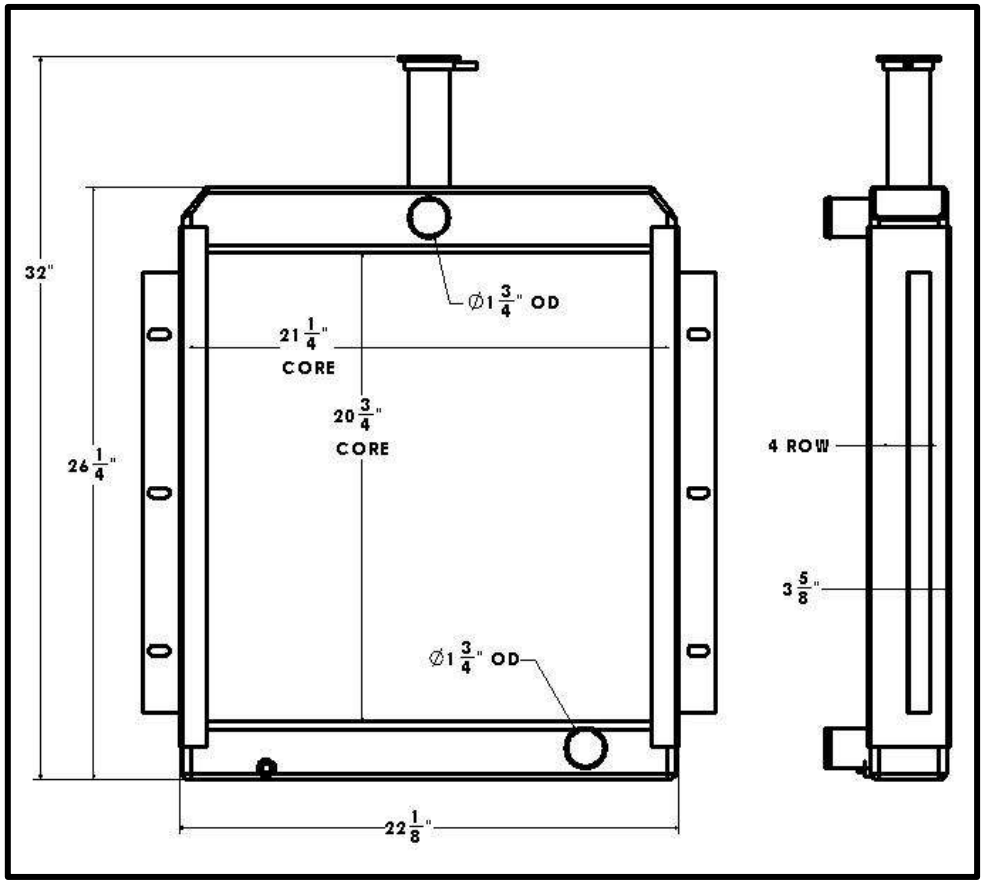

Overall Dimensions : 26-1/4” X 22-1/8” X 3-5/8”
Core: 20-3/4” X 21-1/4” X 4 Row
Inlet: 1-3/4” OD
Outlet: 1-3/4” OD

Listed dimensions may vary slightly from OE

BGR Part Number: ST-0035-5R-TT
OEM:

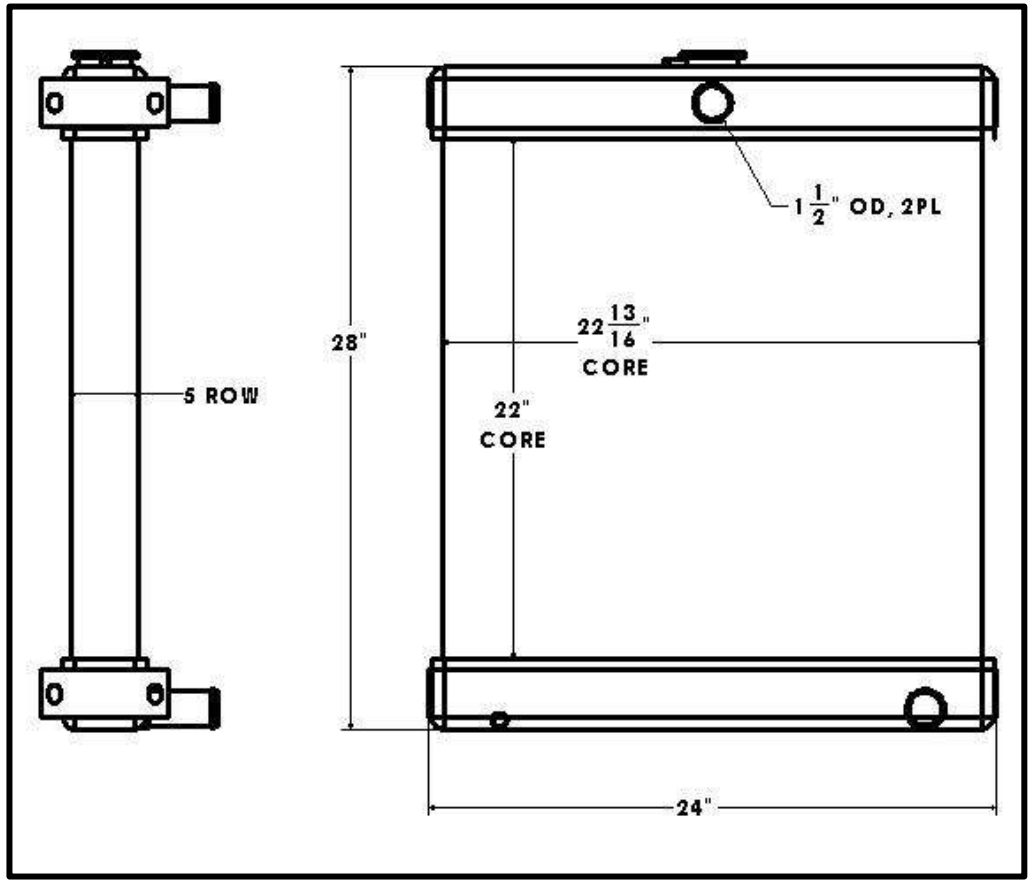

Overall Dimensions: 28” X 24” X 3-1/2” (Tanks)
Core: 22” X 22-13/16” X 5 Row
Inlet: 1-1/2” OD
Outlet: 1-1/2” OD

Tel 1.800.774.2168
www.bgrradiator.com

BGR Part Number: ST-0036-5R-EF
OEM:

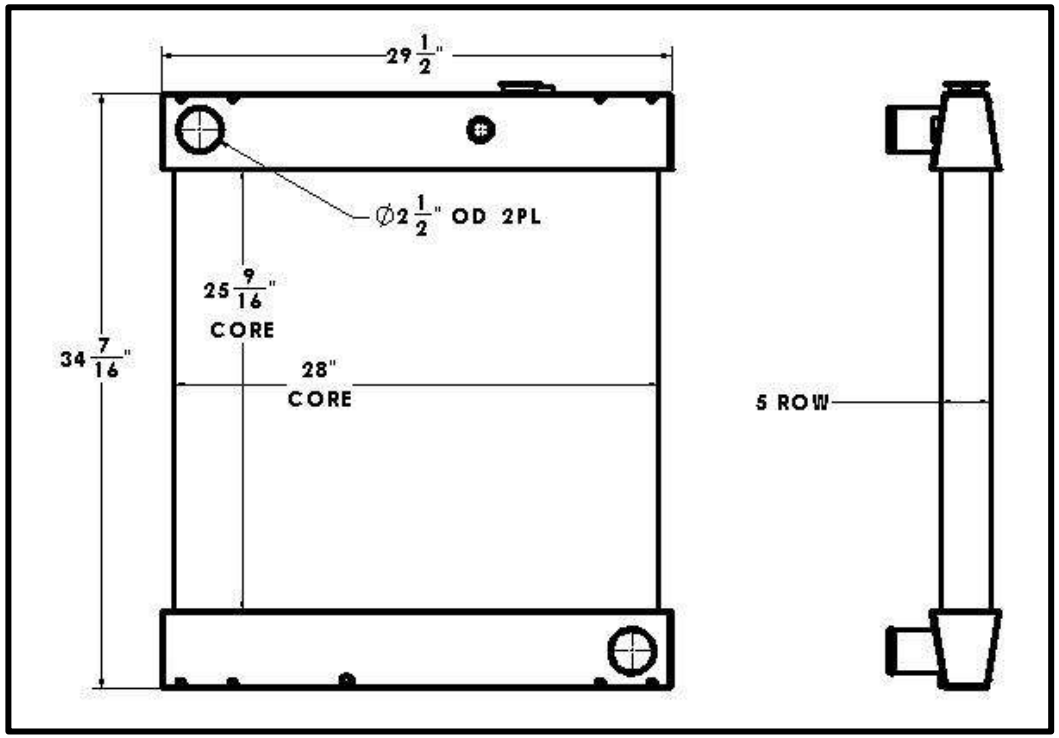

Overall Dimensions: 34-7/16” X 29-1/2” X 4”(Header)
Core: 25-9/16” X 28” X 5 Row
Inlet: 2-1/2” OD
Outlet: 2-1/2” OD

Listed dimensions may vary slightly from OE

BGR Part Number: ST-0037-4R-NC
OEM: Modine 1A15267

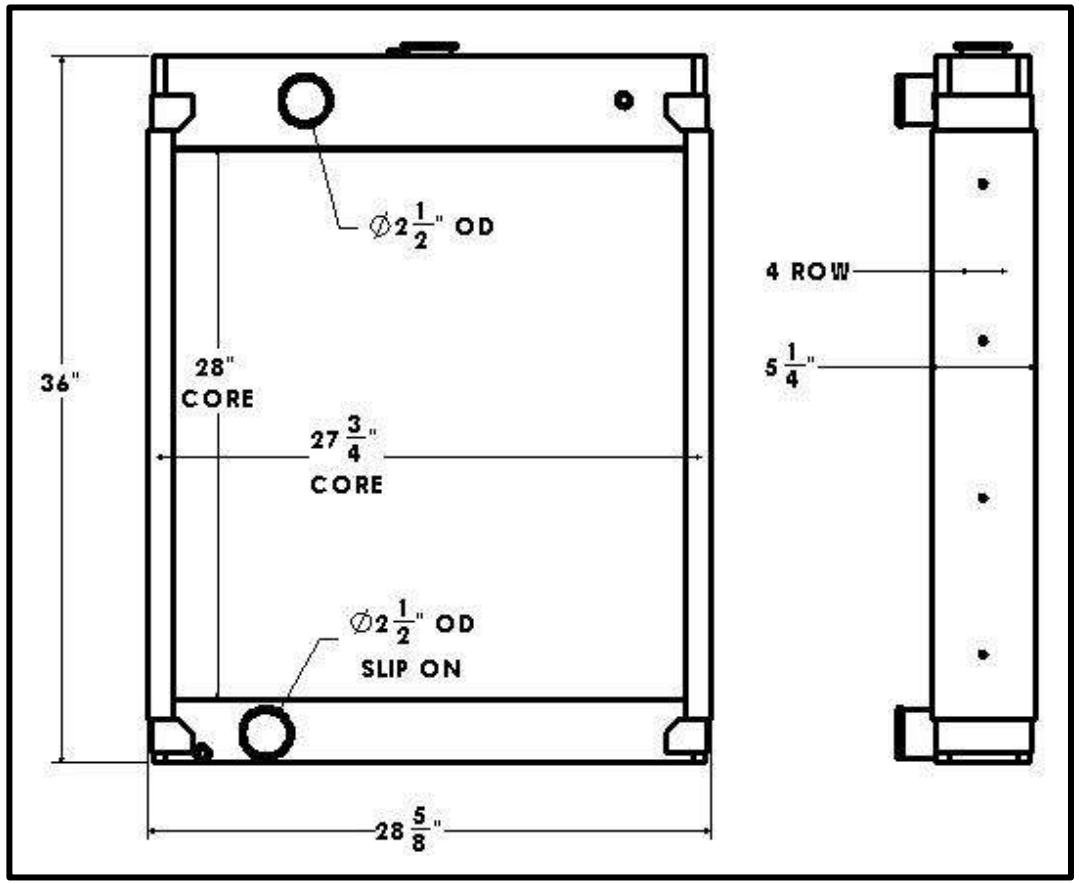

Overall Dimensions : 36” X 28-5/8” X 5-1/4”
Core: 28” X 27-3/4” X 4 Row
Inlet: 2-1/2” OD
Outlet: 2-1/2” OD

Tel 1.800.774.2168
www.bgrradiator.com

BGR Part Number: ST-0038-3VT-EF
OEM: SDM27N 023, 30301099901 IND B

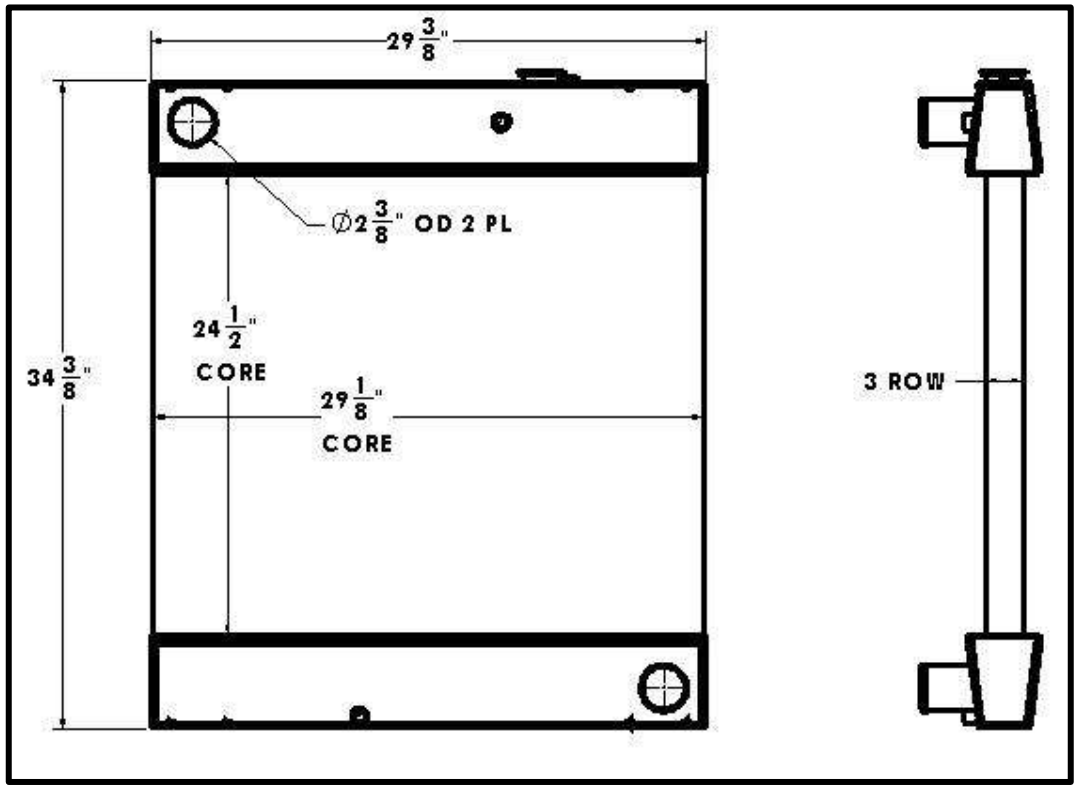

Overall Dimensions: 34-3/8” X 29-3/8” X 3-7/8” (Headers)
Core: 24-1/2” X 29-1/8” X 3 Row
Inlet: 2-3/8” OD
Outlet: 2-3/8” OD

Listed dimensions may vary slightly from OE

BGR Part Number: ST-0039-3VT-EF
OEM:

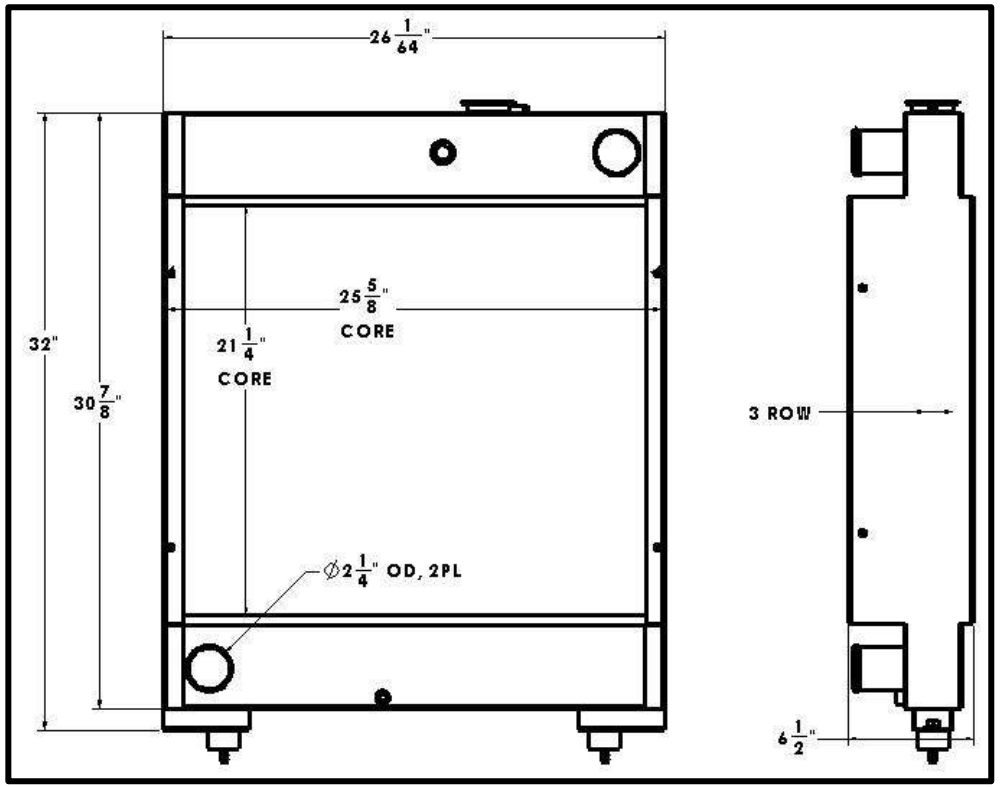

Overall Dimensions: 30-7/8” X 26-1/64” X 6-1/2”
Core: 21-1/4” X 25-5/8” X 3 Row
Inlet: 2-1/4” OD
Outlet: 2-1/4” OD

Tel 1.800.774.2168
www.bgrradiator.com

BGR Part Number: ST-0040-6R-EF
OEM: VOLVO, 230050694, Kohler # GM27950

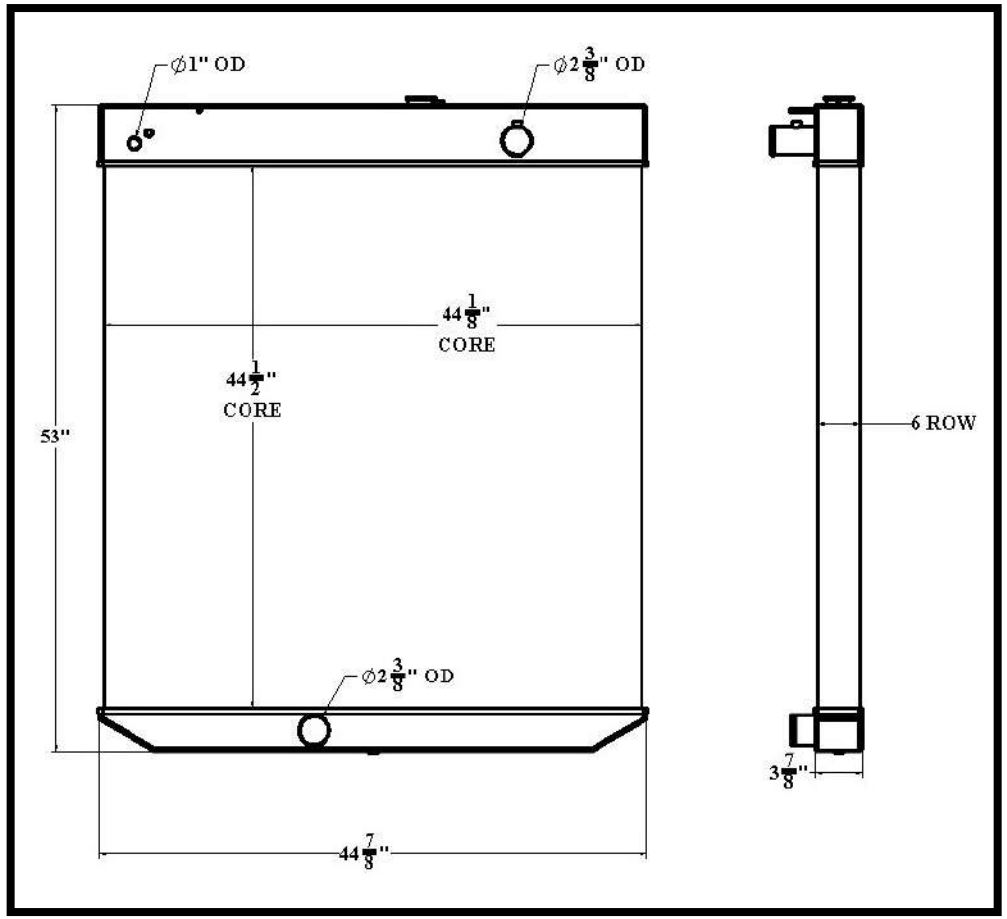

Overall Dimensions : 53” X 44-7/8” X 3-7/8”
Core: 44-1/2” X 44-1/8” X 4 Row
Inlet: 2-3/8” OD
Outlet: 2-3/8” OD
SAME AS ST-0132-4I-EF BUT 6 ROW CORE

Listed dimensions may vary slightly from OE

BGR Part Number: ST-0041-4I-EF

OEM: VOLVO 866092, 9945, 100313137, GM26613, 230050586

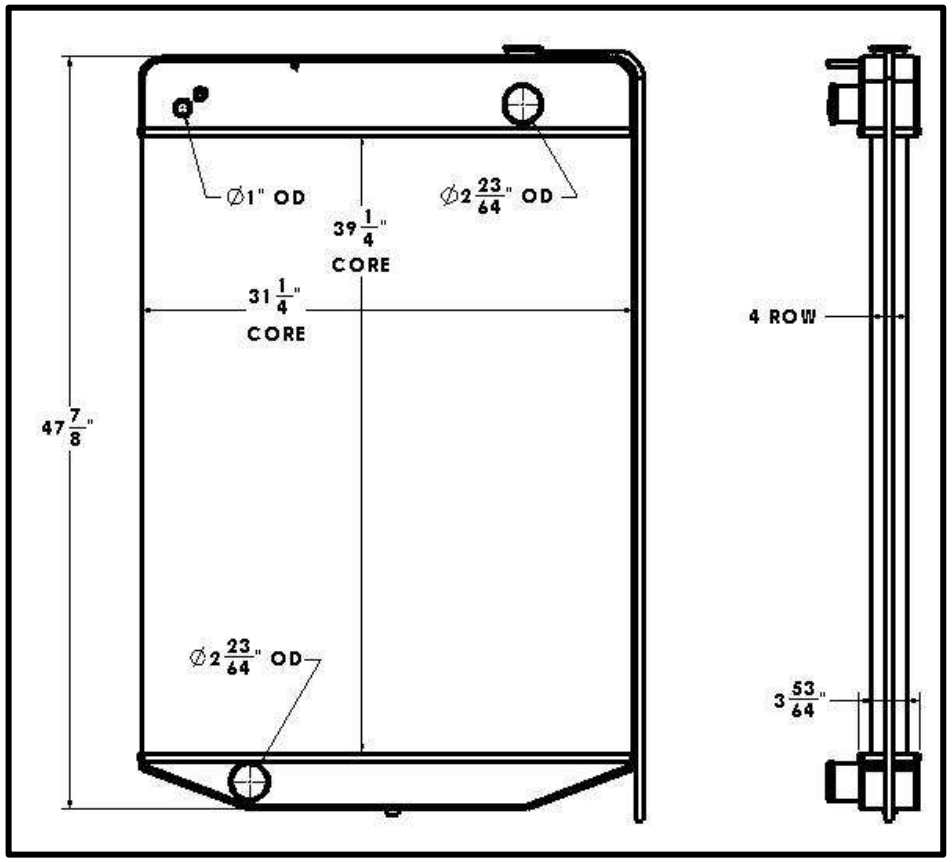

Overall Dimensions : 47-7/8” X 31-1/4” X 3-53/64”

Core: 39-1/4” X 31-1/4” X 4 Row

Inlet: 2-3/8” OD

Outlet: 2-3/8” OD

Tel 1.800.774.2168

www.bgrradiator.com

BGR Part Number: ST-0042-4R-NC

OEM:

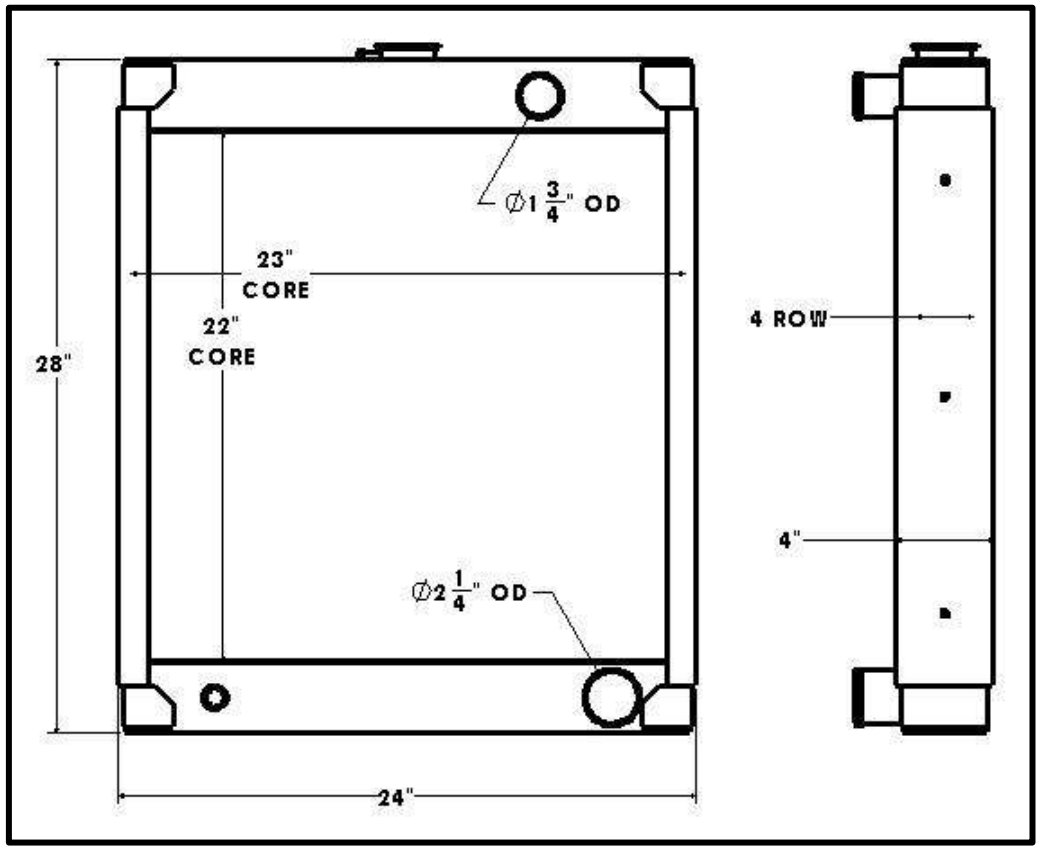

Overall Dimensions: 28” X 24” X 4”

Core: 22” X 23” X 4 Row

Inlet: 1-3/4” OD

Outlet: 2-3/4” OD

Listed dimensions may vary slightly from OE

BGR Part Number: ST-0043-3R-RB
OEM: White

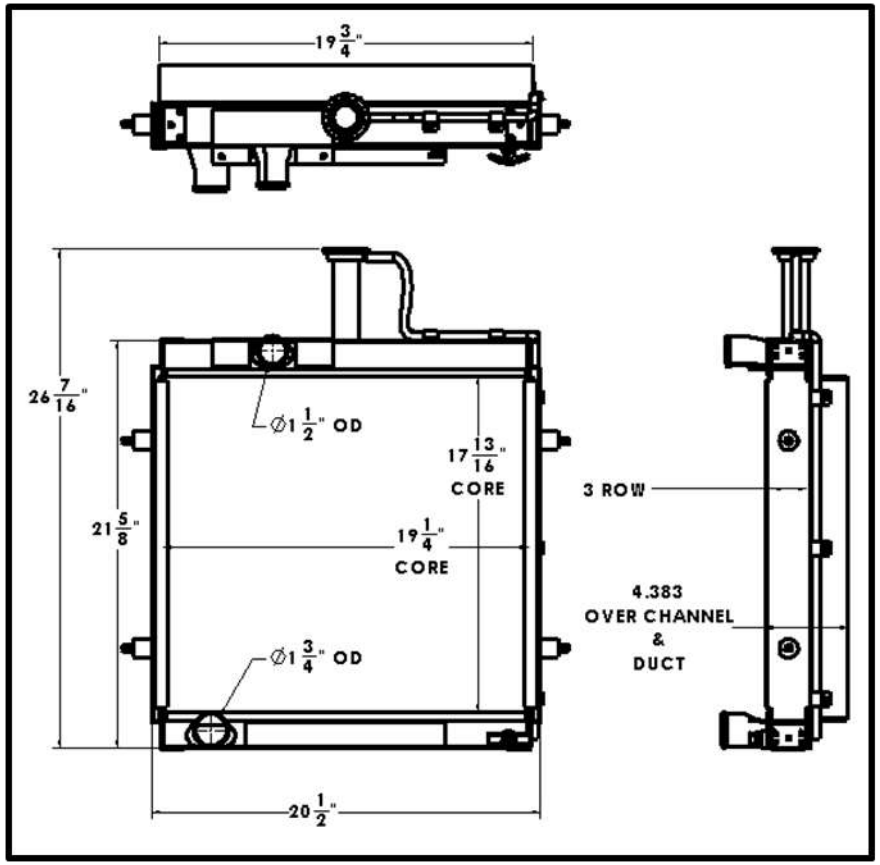

Overall Dimensions: 26-7/16” X 20-1/2” X4-3/8”
Core: 17-13/16” X 19-1/4” X 3 Row
Inlet: 1-1/2” OD
Outlet: 1-3/4” OD

Tel 1.800.774.2168
www.bgrradiator.com

BGR Part Number: ST-0044-4X-F
OEM: SN849946

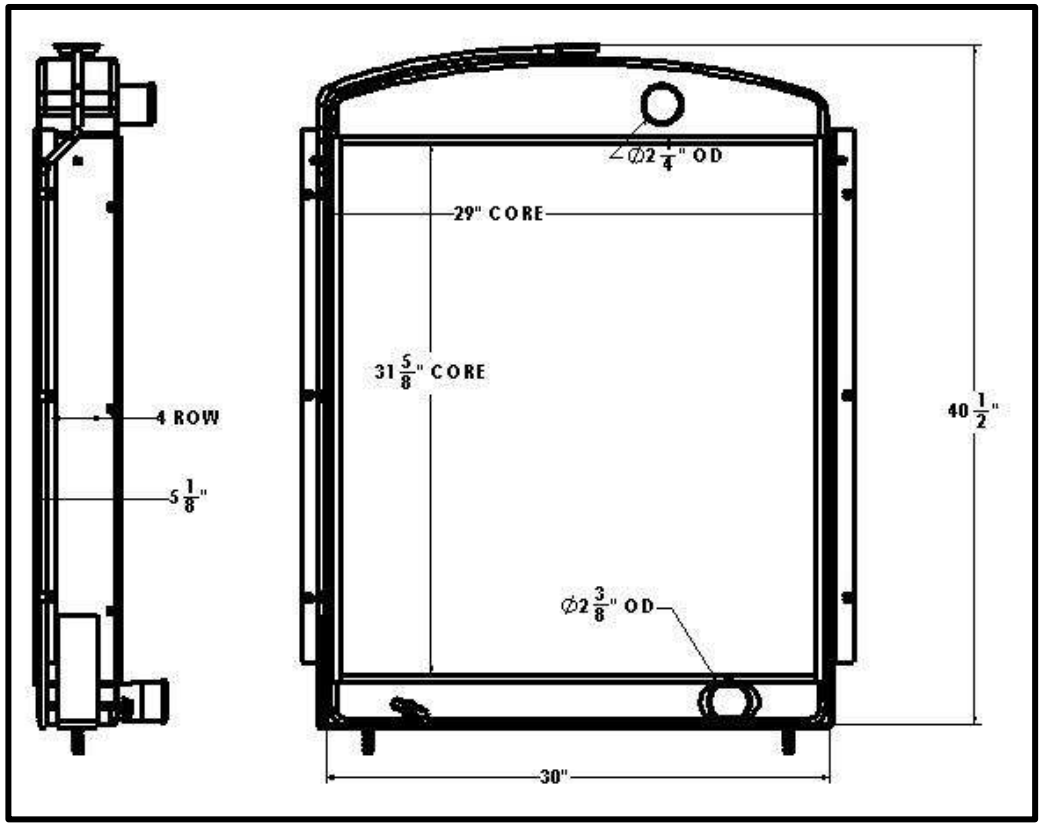

Overall Dimensions: 40-1/2” X 30” X 5-1/8”
Core: 31-5/8” X 29” X 4 Row
Inlet: 2-1/4” OD
Outlet: 2-3/8” OD

Listed dimensions may vary slightly from OE

BGR Part Number: ST-0045-6T-EF
OEM: SCREEN PLANT

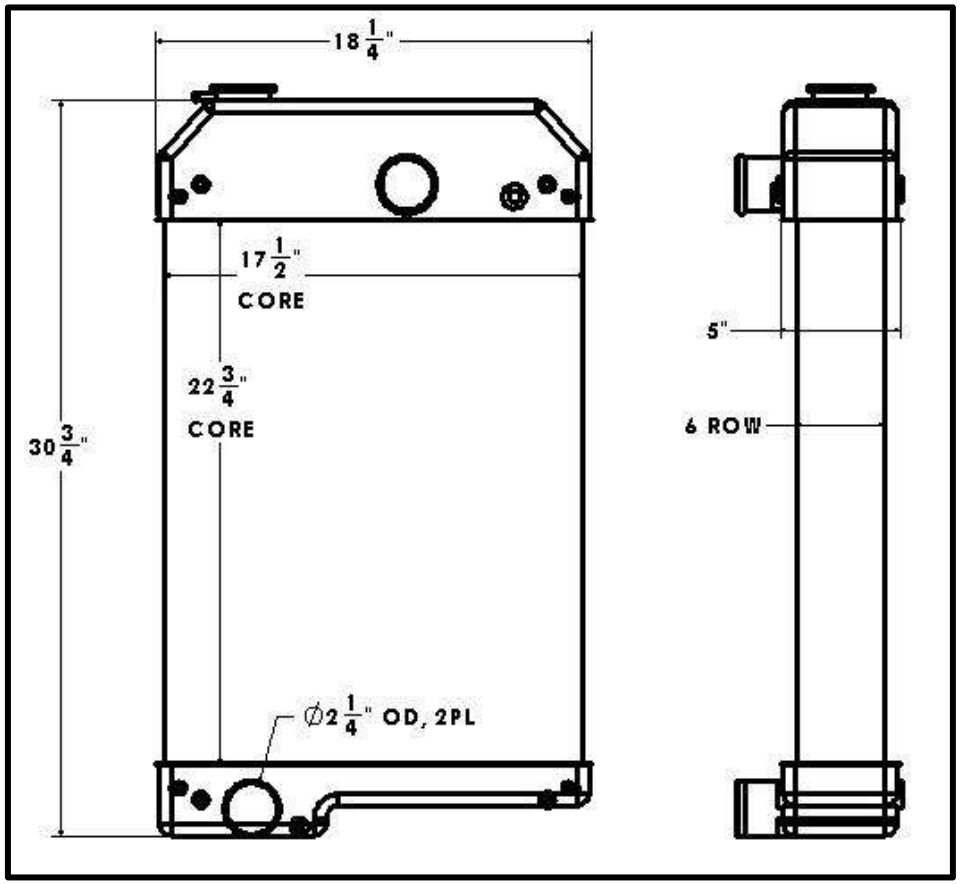

Overall Dimensions: 30-3/4” X 18-1/8” X 5-5/8”
Core: 22-1/2” X 17-7/8” X 6 Row
Inlet: 2-1/4” OD
Outlet: 2-1/4” OD

Tel 1.800.774.2168
www.bgrradiator.com

BGR Part Number: ST-0046-7LE-TT
OEM:

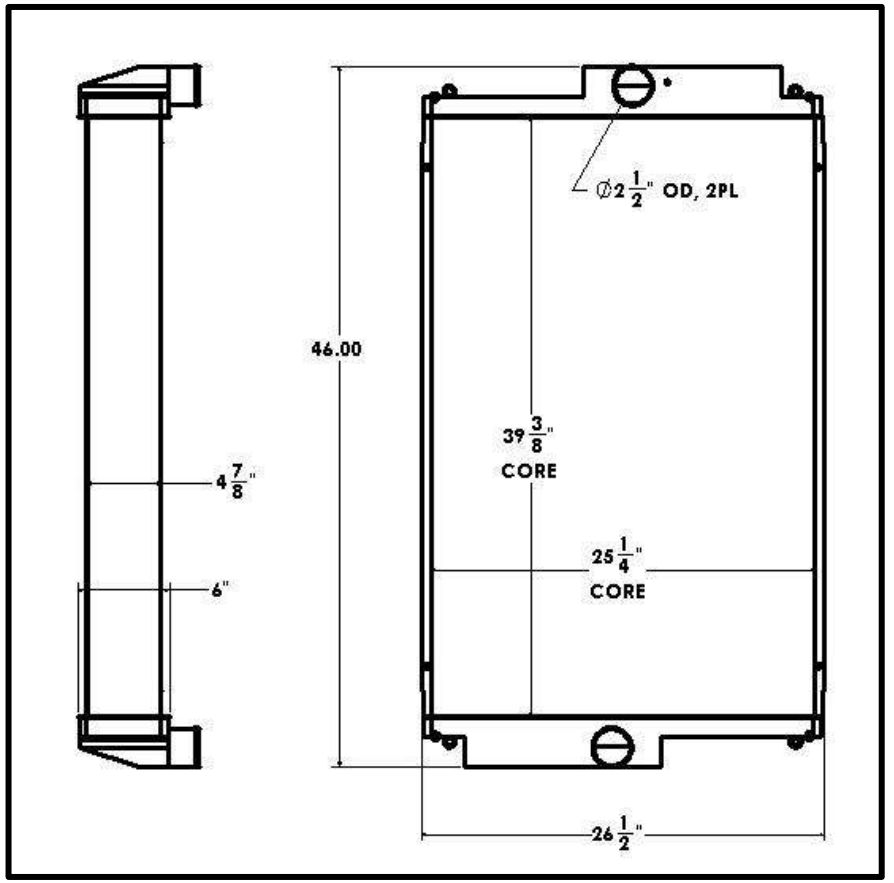

Overall Dimensions : 46” X 26-1/2” X 6”
Core: 39-3/8” X 25-1/4” X 8 Row
Inlet: 2-1/2” OD
Outlet: 1-1/2” OD

Listed dimensions may vary slightly from OE

BGR Part Number: ST-0047-5S-NC
OEM:

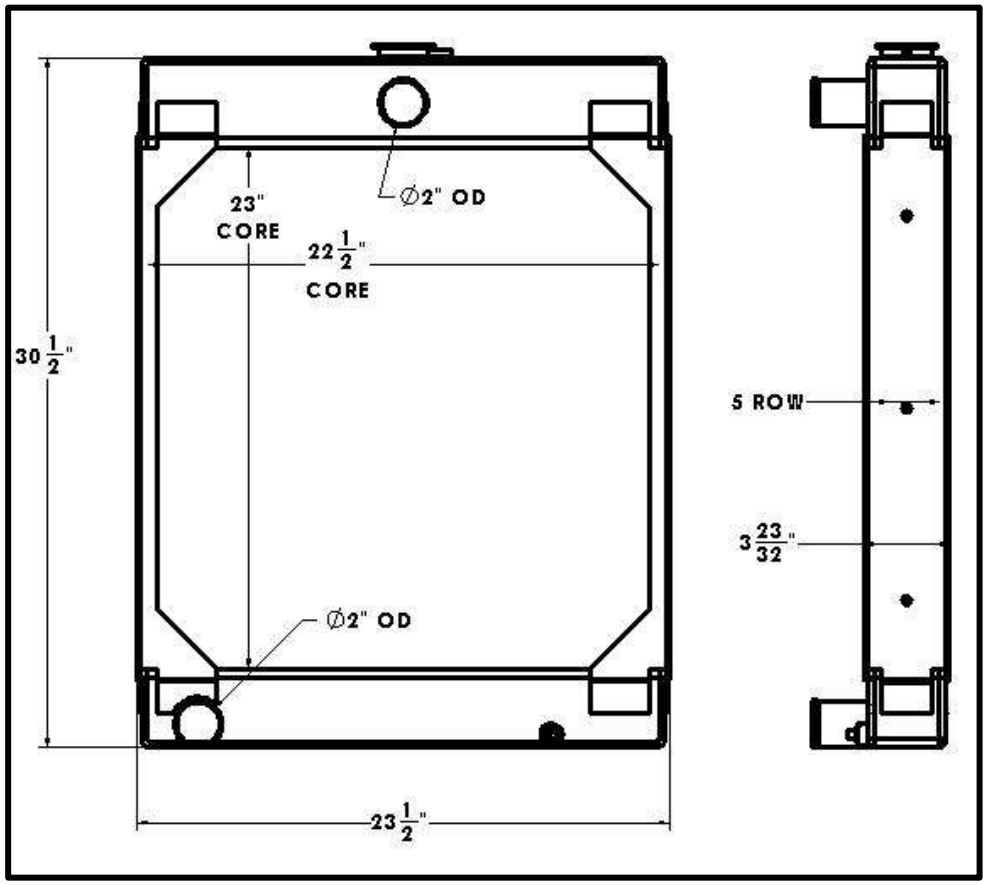

Overall Dimensions: 30-1/2” X 23-1/2” X 3-23/32”
Core: 23” X 22-1/2” X 5 Row
Inlet: 2” OD
Outlet: 2” OD

Tel 1.800.774.2168
www.bgrradiator.com

BGR Part Number: ST-0048-5S-NC
OEM:

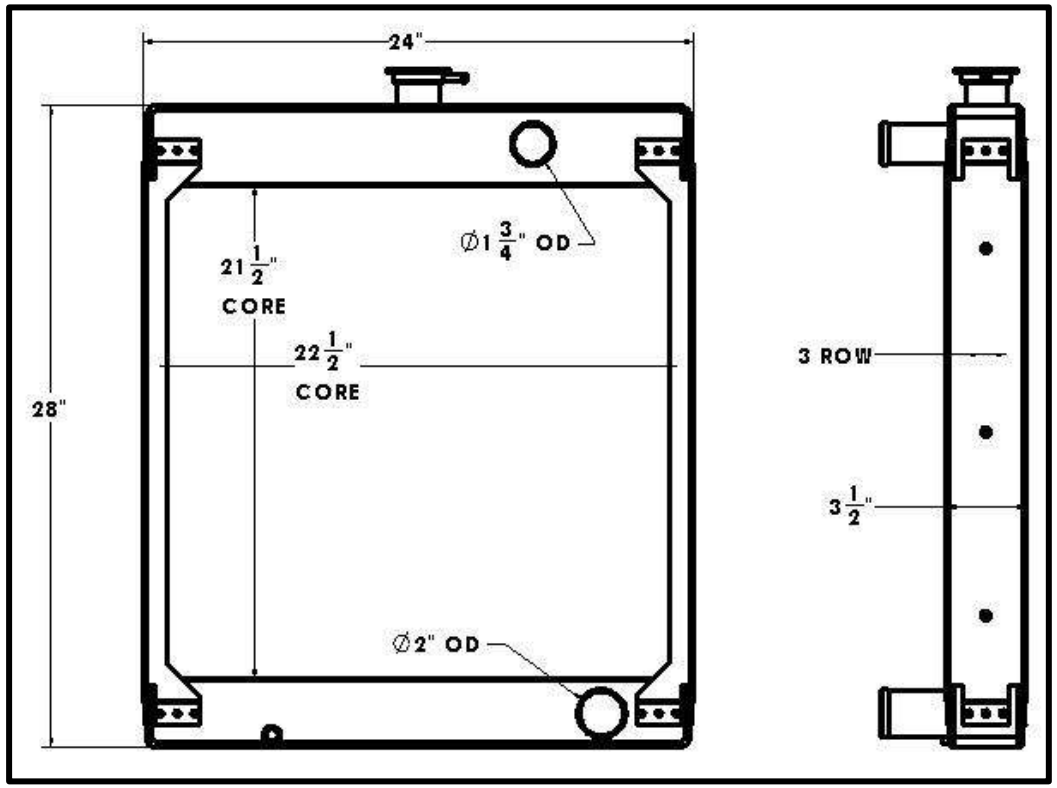

Overall Dimensions: 28” X 24” X 3-1/2”
Core: 21-1/2” X 22-1/2” X 3 Row
Inlet: 1-3/4” OD
Outlet: 2” OD

Listed dimensions may vary slightly from OE

BGR Part Number: ST-0049-5R-NC
OEM: 1A16460

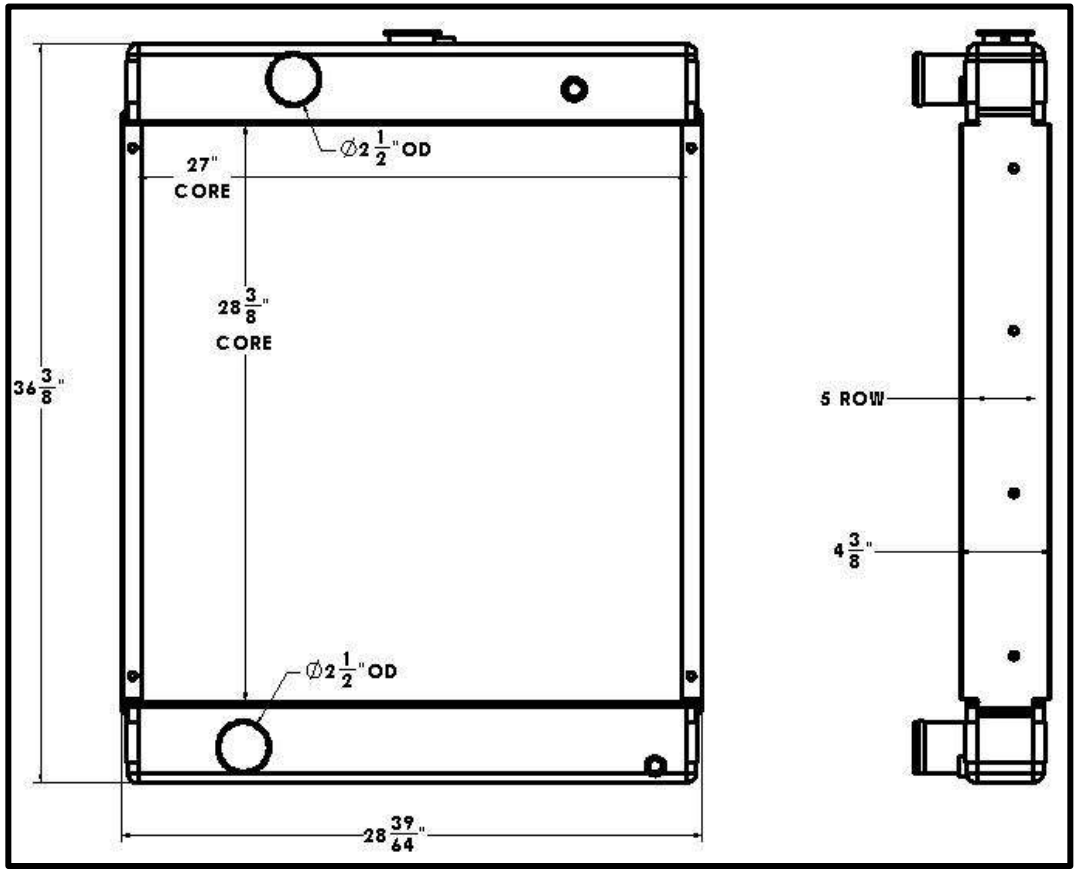

Overall Dimensions : 36-3/8” X 28-39/64” X 4-3/8”
Core: 28-3/8” X 27” X 5 Row
Inlet: 2-1/2” OD
Outlet: 2-1/2” OD

Tel 1.800.774.2168
www.bgrradiator.com

BGR Part Number: ST-0050-6R-F
OEM: GENERAC OG1933B 6 ROWS

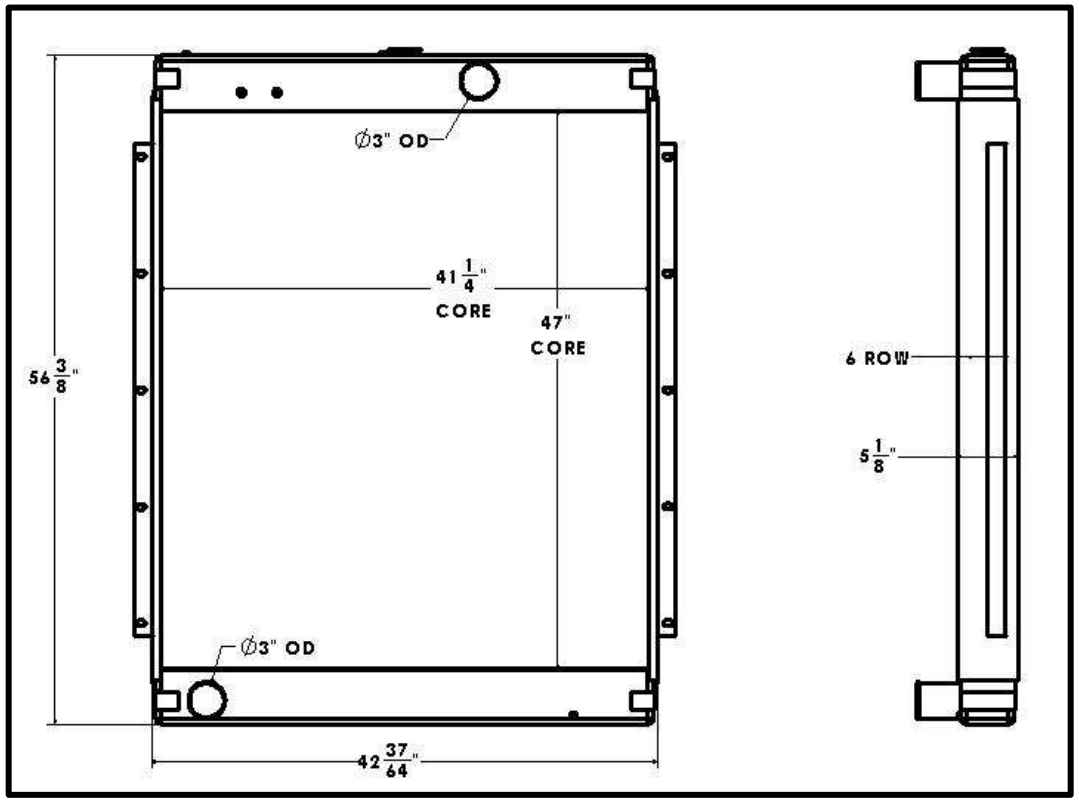

Overall Dimensions: 56-3/8” X 42-37/64” X 5-1/8”
Core: 47” X 41-1/4” X 6 Row
Inlet: 3” OD
Outlet: 3” OD

Listed dimensions may vary slightly from OE

BGR Part Number: ST-0051-4R-NC
1A10412, Modine, 030681, 380336

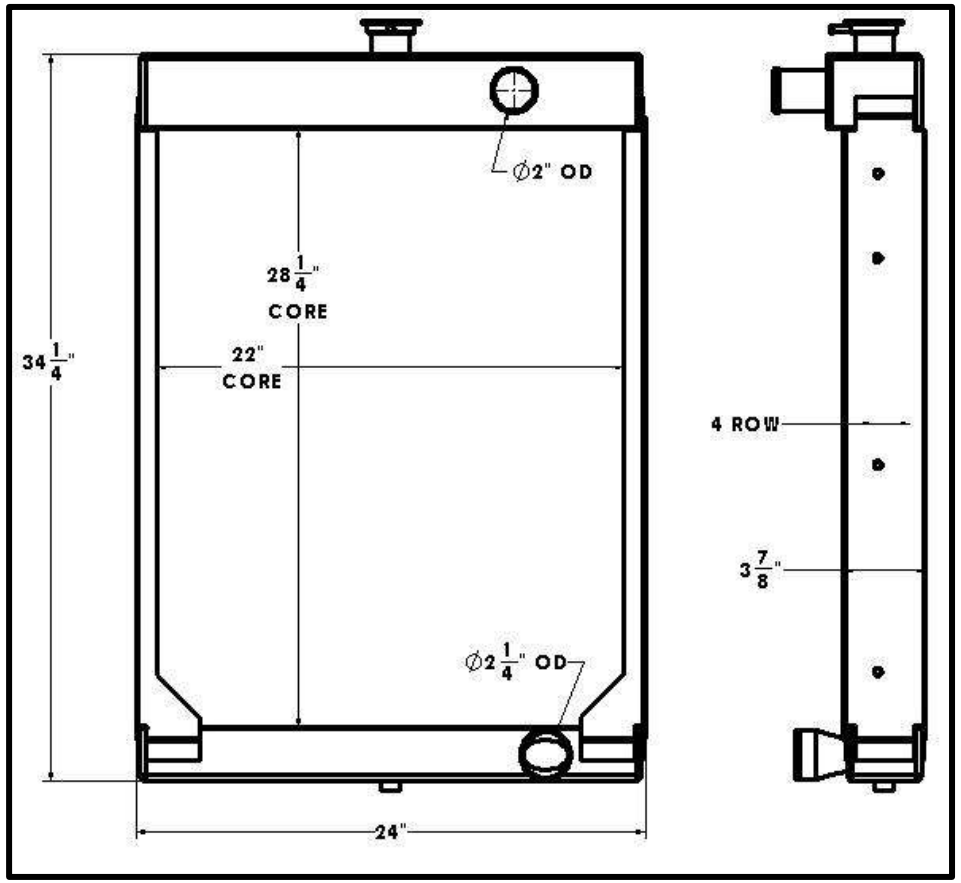

Overall Dimensions : 34-1/4” X 24” X 3-7/8”
Core: 28-1/4” X 22” X 4 Row
Inlet: 2” OD
Outlet: 2-1/4” OD

Tel 1.800.774.2168
www.bgrradiator.com

BGR Part Number: ST-0052-4I-F
OEM:SNOWCAT WITH CUMMINS ENGINE

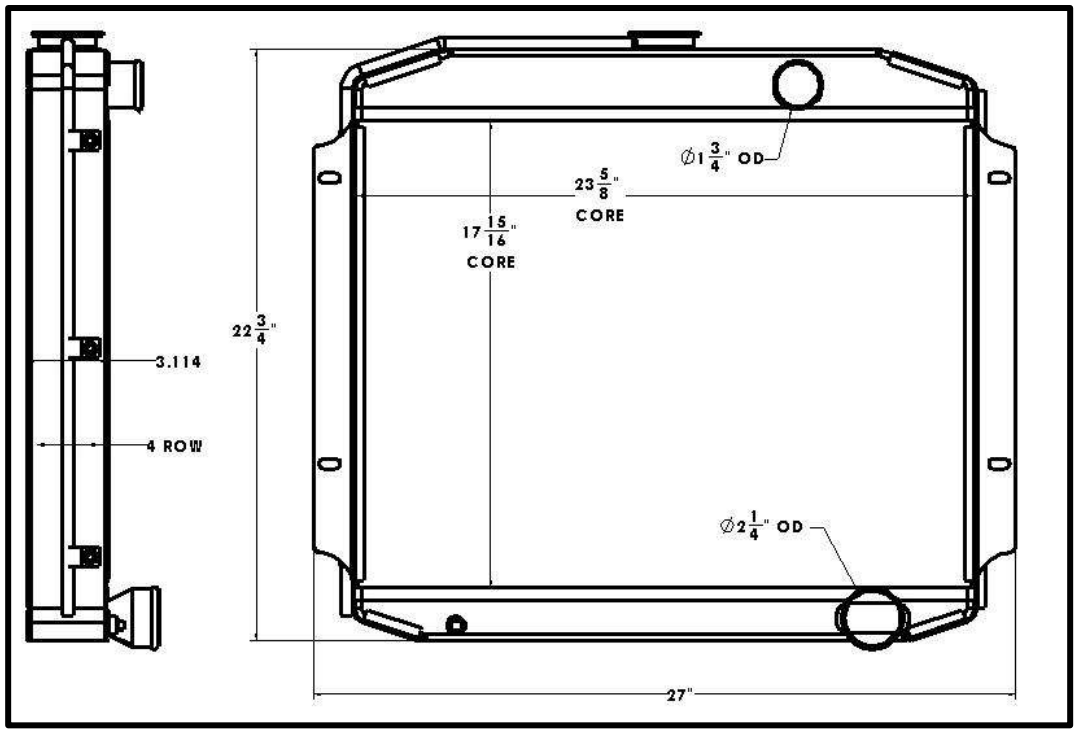

Overall Dimensions: 22-3/4” X 23-5/8” X 3-1/8”
Core: 17-15/16” X 23-5/8” X 4 Row
Inlet: 1-3/4” OD
Outlet: 2-1/4” OD

Listed dimensions may vary slightly from OE

BGR Part Number: ST-0053-8M-EF
OEM:

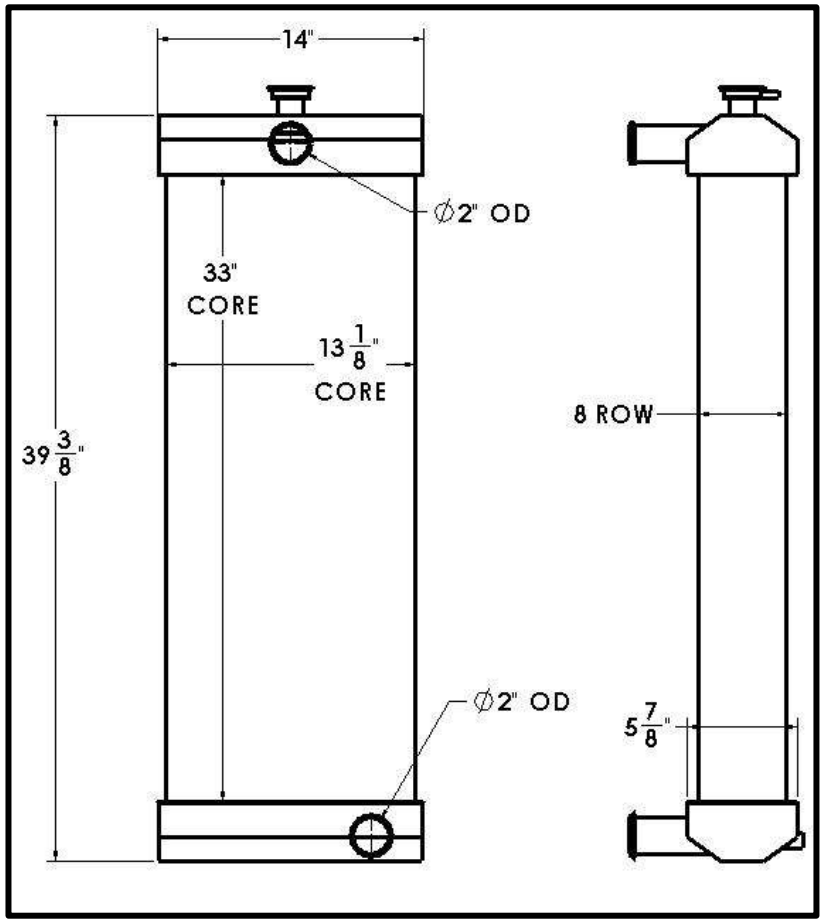

Overall Dimensions: 39-3/8” X 14” X 5-7/8”(Tanks)
Core: 33” X 13-1/8” X 8 Row
Inlet: 2” OD
Outlet: 2” OD

Tel 1.800.774.2168
www.bgrradiator.com

BGR Part Number: ST-0054-4R-F
OEM:

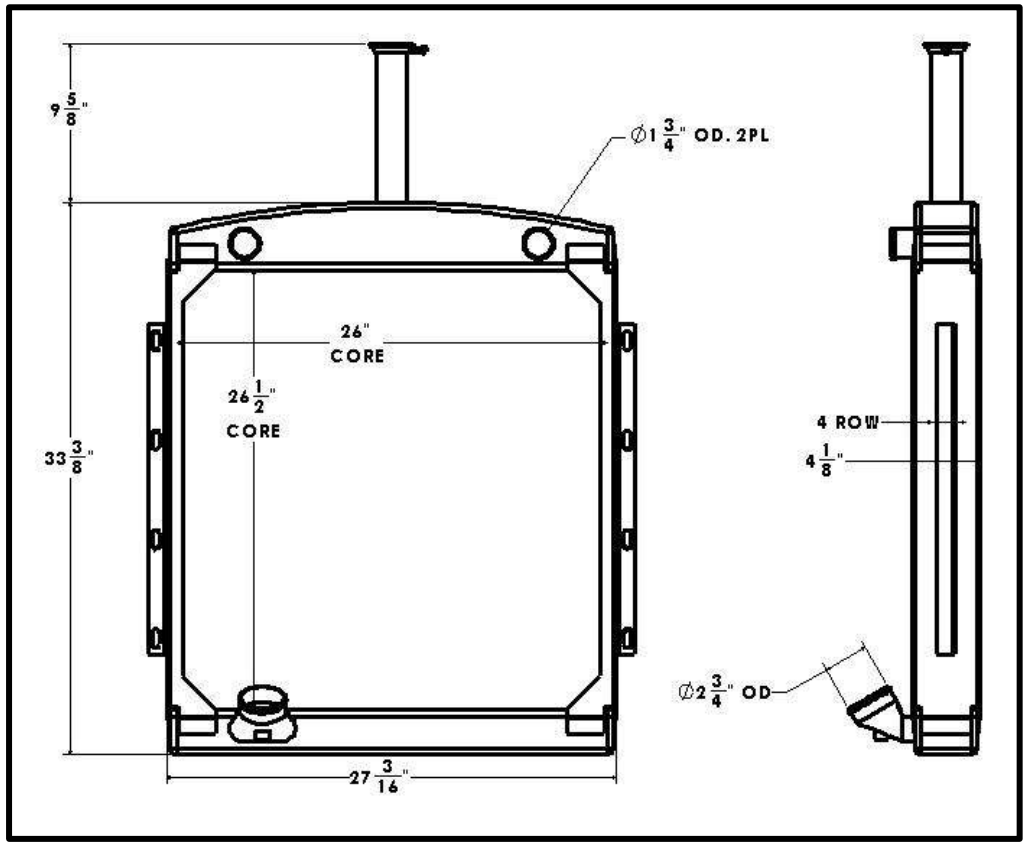

Overall Dimensions : 33-3/8” X 27-3/16” X 4-1/8”
Core: 26-1/2” X 26” X 4 Row
Inlet: 1-3/4” OD (2 Places)
Outlet: 2-3/4” OD

Listed dimensions may vary slightly from OE

BGR Part Number: ST-0055-2M-EF
OEM:

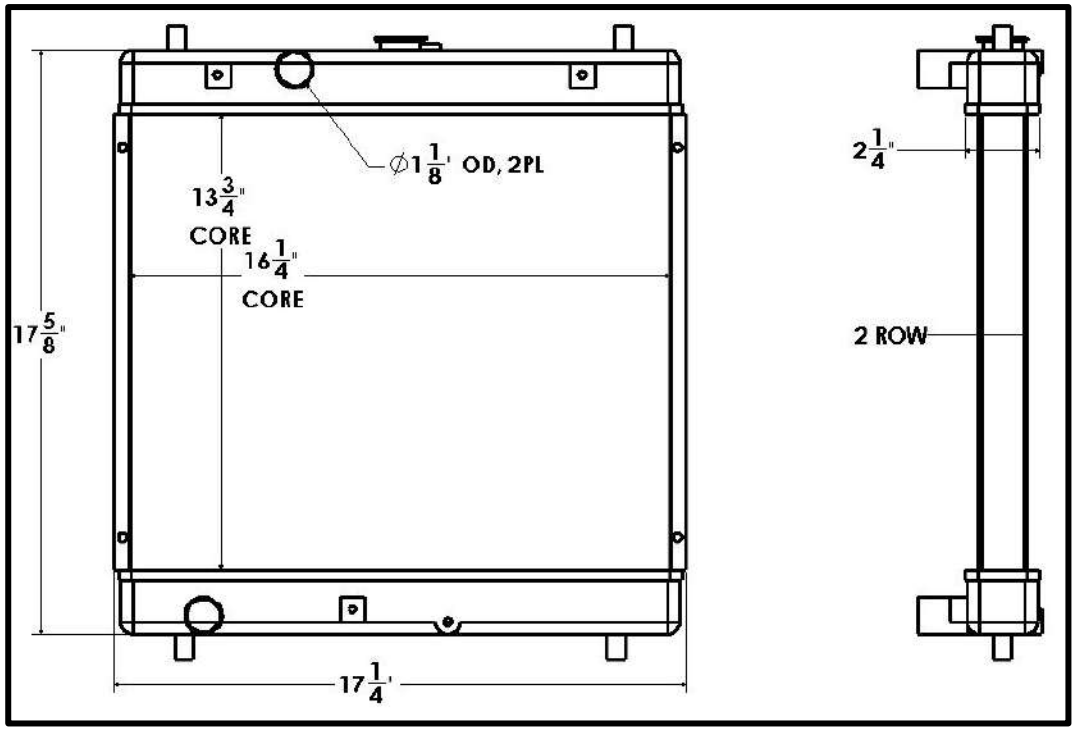

Overall Dimensions : 17-5/8” X 17-1/4” X 2-1/4” (Tanks)
Core: 13-3/4” X 16-1/4” X 2 Row
Inlet: 1-1/8” OD
Outlet: 1-1/8” OD

Tel 1.800.774.2168
www.bgrradiator.com

BGR Part Number: ST-0056-4R-TT
OEM:

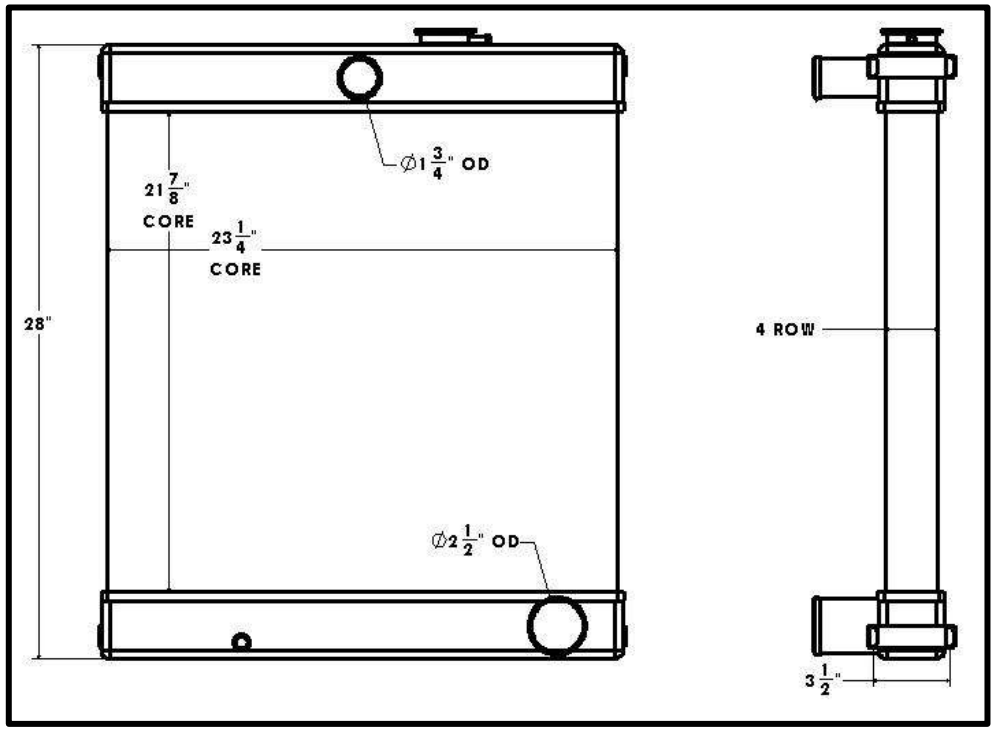

Overall Dimensions : 28” X 24” X 3-1/2” (Tanks)
Core: 21-7/8” X 23-1/4” X 4 Row
Inlet: 1-3/4” OD
Outlet: 2-1/2” OD

Listed dimensions may vary slightly from OE

BGR Part Number: ST-0057-5R-F
OEM:

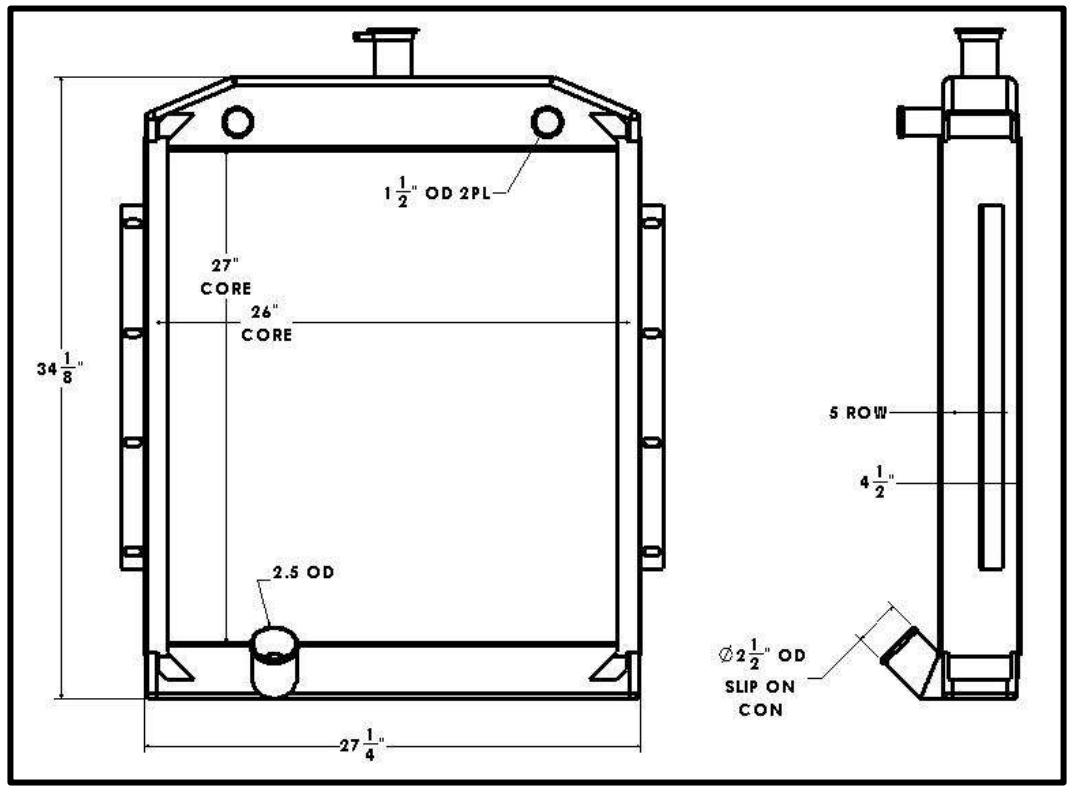

Overall Dimensions: 34-1/8” X 27-1/4” X 4-1/2”
CORE: 27” X 26” X 5 ROW
Inlet: 1-1/2” OD
Outlet: 2-1/2” OD

Tel 1.800.774.2168
www.bgrradiator.com

BGR Part Number: ST-0058-5Z-NC
OEM: 1A12149, 030487

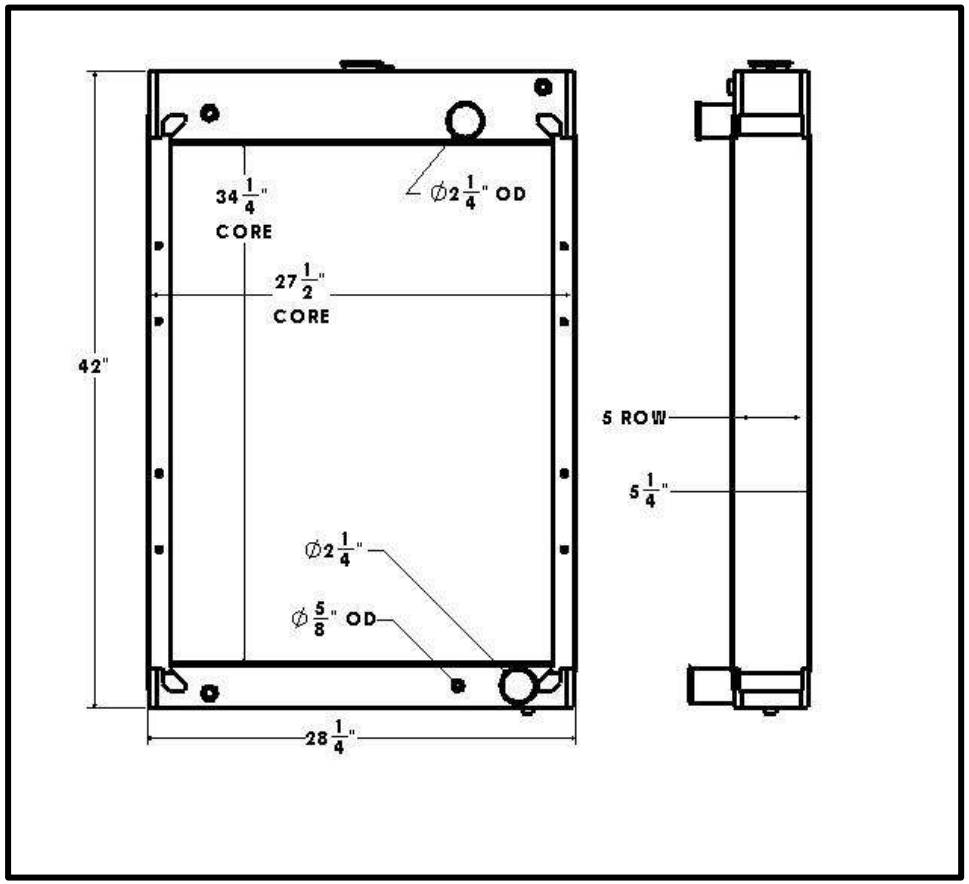

Overall Dimensions : 42” X 28-1/4” X 5-1/4”
Core: 34-1/4” X 27-1/2” X 5 Row
Inlet: 2-1/4” OD
Outlet: 2-1/4” OD

Listed dimensions may vary slightly from OE

BGR Part Number: ST-0059-5R-NC
OEM:22-4532, A-255345

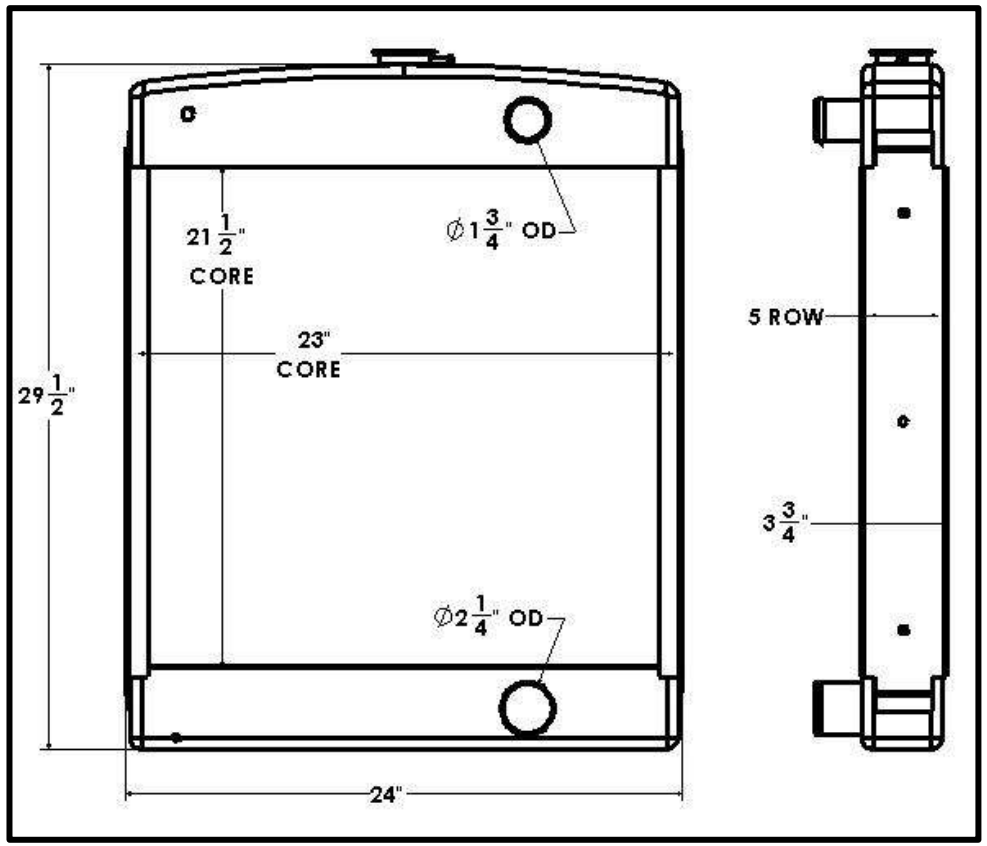

Overall Dimensions : 29-1/2” X 24” X 3-3/4”
Core: 21-1/2” X 23” X 5 Row
Inlet: 1-3/4” OD
Outlet: 2-1/4” OD

Tel 1.800.774.2168
www.bgrradiator.com

BGR Part Number: ST-0060-4R-NC
OEM:

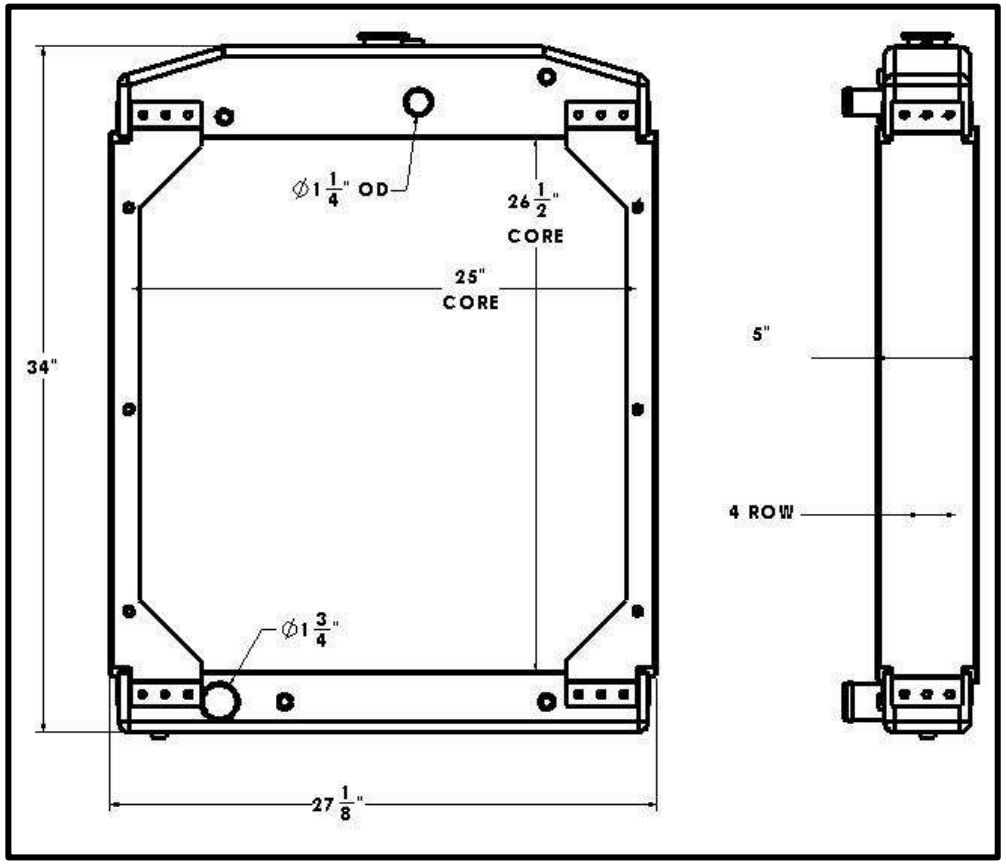

Overall Dimensions: 34” X 27-1/8” X 5”
Core: 26-1/2” X 25” X 4 Row
Inlet: 1-1/4” OD
Outlet: 1-3/4” OD

Listed dimensions may vary slightly from OE

BGR Part Number: ST-0061-3MZ-EF
OEM:

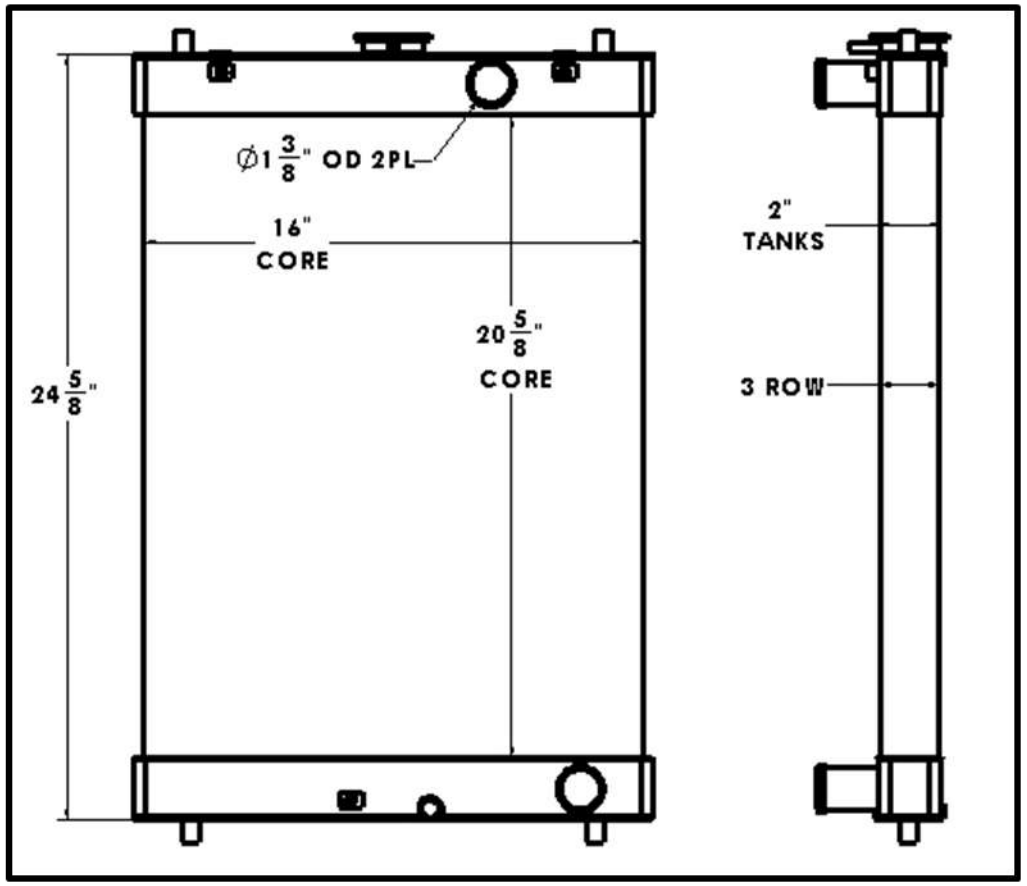

Overall Dimensions: 24-5/8” X 17-1/4” X 2”
Core: 20-5/8” X 16” X 3 Row
Inlet: 1-3/8” OD
Outlet: 1-3/8” OD

Tel 1.800.774.2168
www.bgrradiator.com

BGR Part Number: ST-0062-5R-NC
OEM:

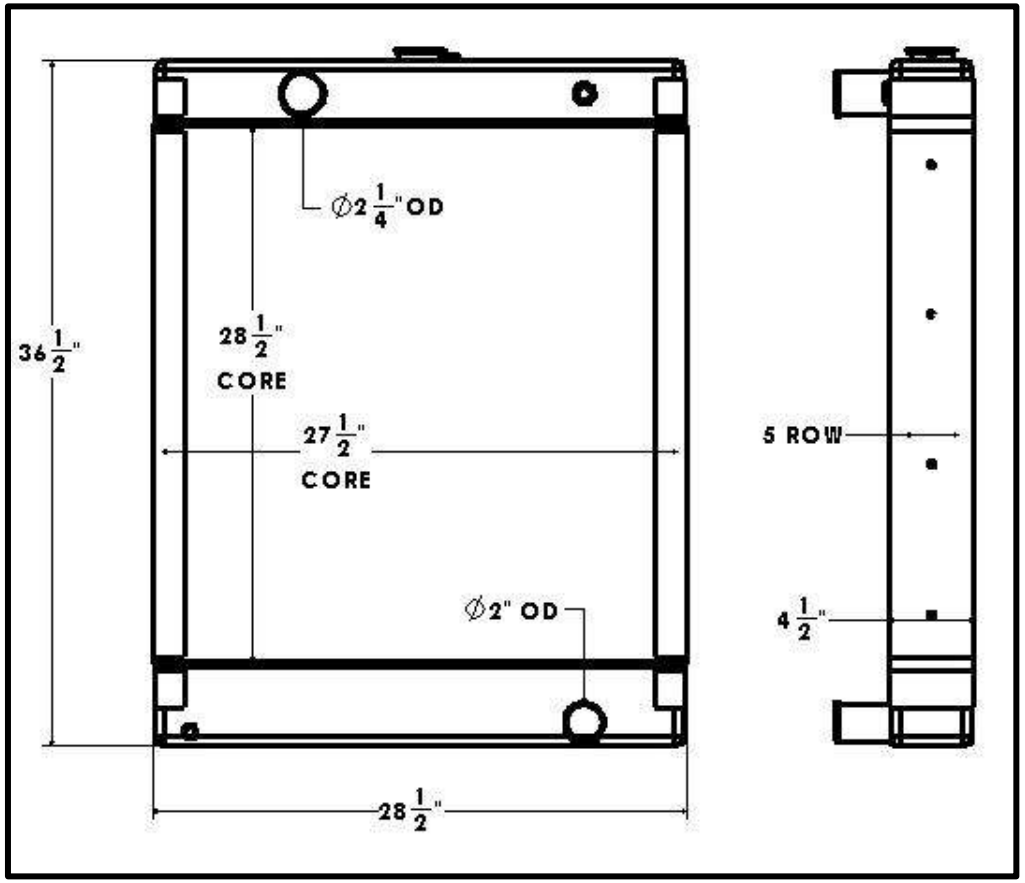

Overall Dimensions: 36-1/2” X 28-1/2” X 4-1/2”
Core: 28-1/2” X 27-1/2” X 5 Row
Inlet: 2-1/4” OD
Outlet: 2” OD

Listed dimensions may vary slightly from OE

BGR Part Number: ST-0063-3VT-F
OEM: 1A13704

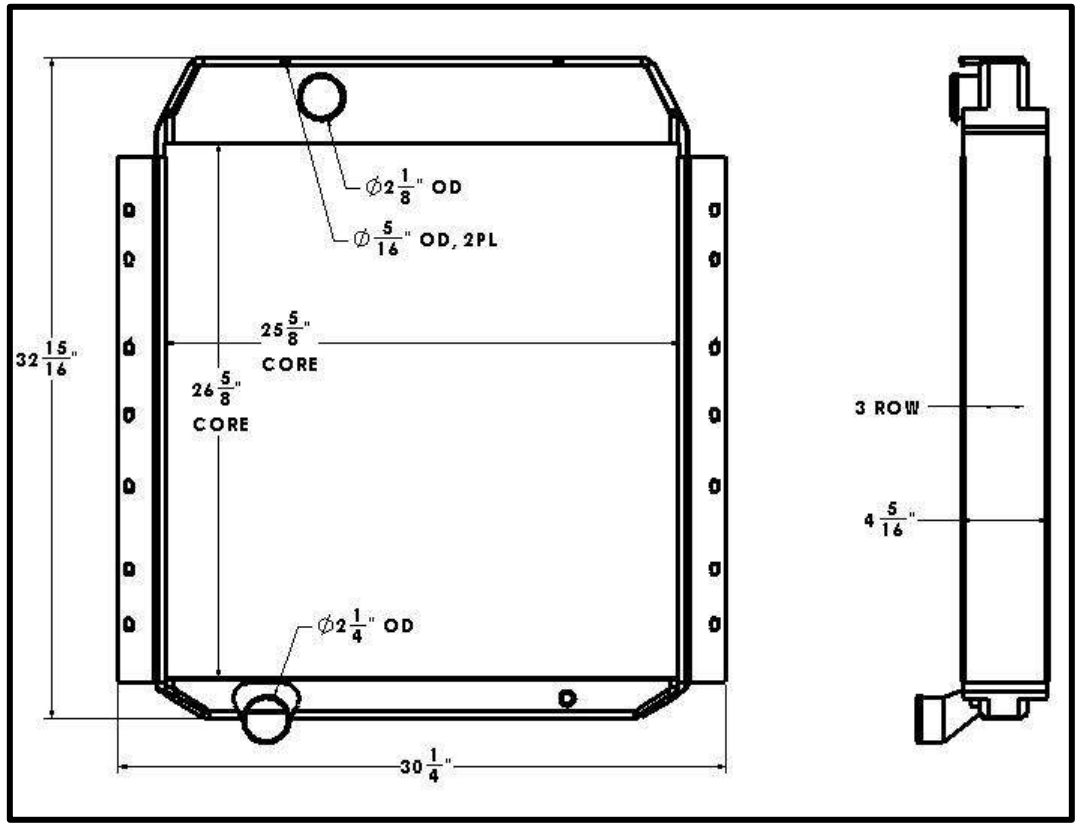

Overall Dimensions : 32-15/16” X 30-1/4” X 4-5/16”
Core: 26-5/8” X 25-5/8” X 3 Row
Inlet: 2-1/8” OD
Outlet: 2-1/4” OD

Tel 1.800.774.2168
www.bgrradiator.com

BGR Part Number: ST-0064-4R-NC
OEM: 1A14100 130-3064

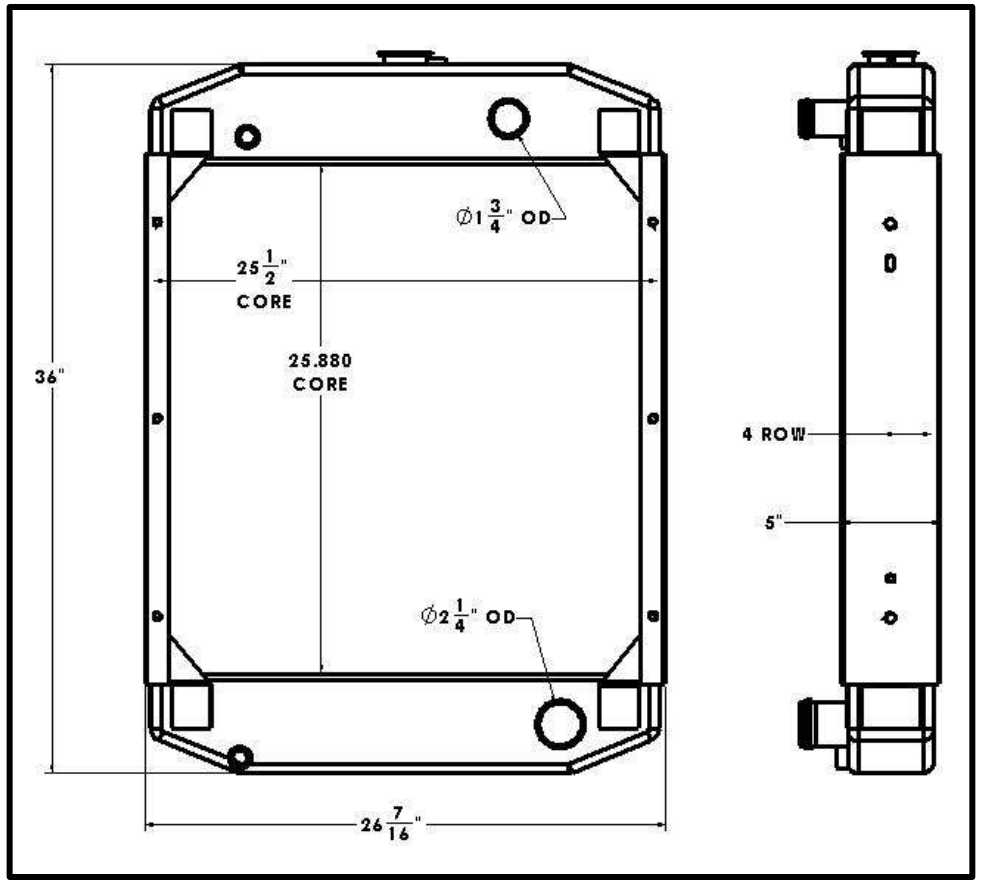

Overall Dimensions : 36” X 26-7/16” X 5”
Core: 25-7/8” X 25-1/2” X 4 Row
Inlet: 1-3/4” OD
Outlet: 2-1/4” OD

Listed dimensions may vary slightly from OE

BGR Part Number: ST-0065-6T-EF
OEM: PERKINS ND Marston PN 20224201-A

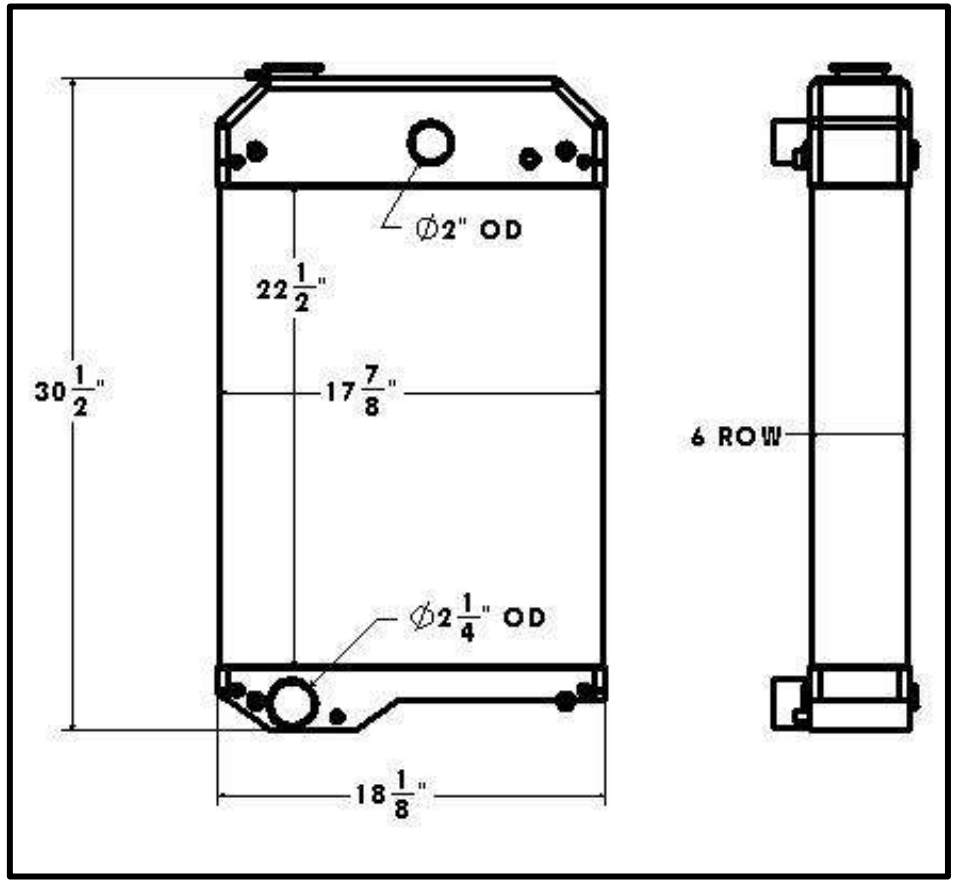

Overall Dimensions: 30-1/2” X 18-1/4” X 5”
Core: 22-3/4” X 17-1/2” X 6 Row
Inlet: 2” OD
Outlet: 2-1/4” OD

Tel 1.800.774.2168
www.bgrradiator.com

BGR Part Number: ST-0066-5R-EF
OEM:

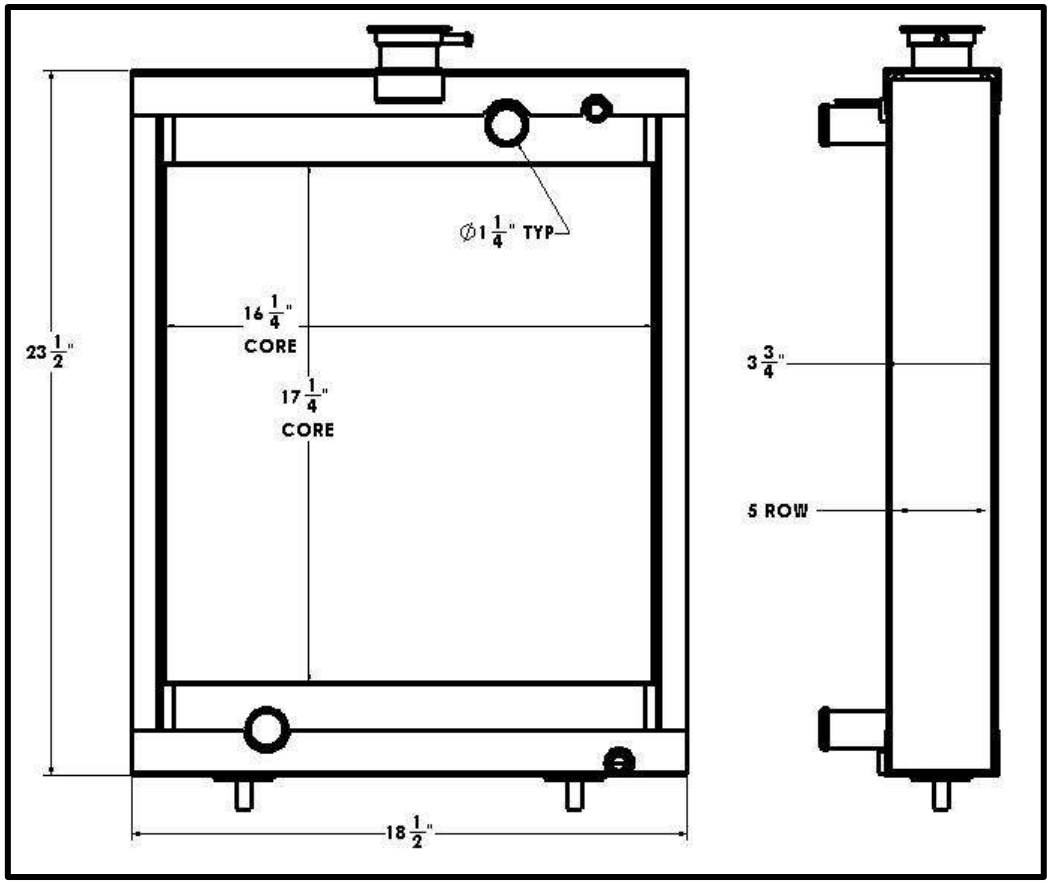

Overall Dimensions: 23-1/2” X 18-1/2” X 3-3/4”
Core: 17-1/4” X 16-1/4” X 5 Row
Inlet: 1-1/4” OD
Outlet: 1-1/4” OD

Listed dimensions may vary slightly from OE

BGR Part Number: ST-0067-4R-F
ONAN Part Number: 130-0961-L

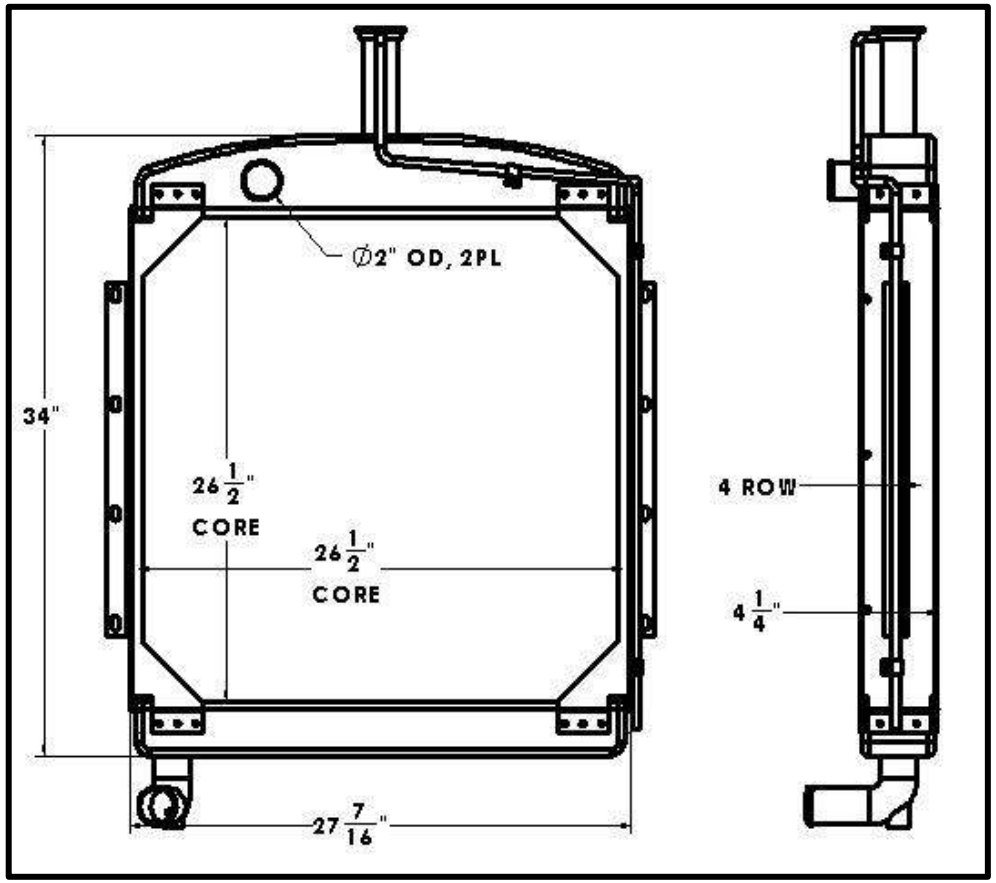

Overall Dimensions: 34” X 27-7/16” X 4-1/4”
Core: 26-1/2” X 26-1/2” X 4 Row
Inlet: 2” OD
Outlet: 2” OD

Tel 1.800.774.2168
www.bgrradiator.com

BGR Part Number: ST-0068-5R-NC

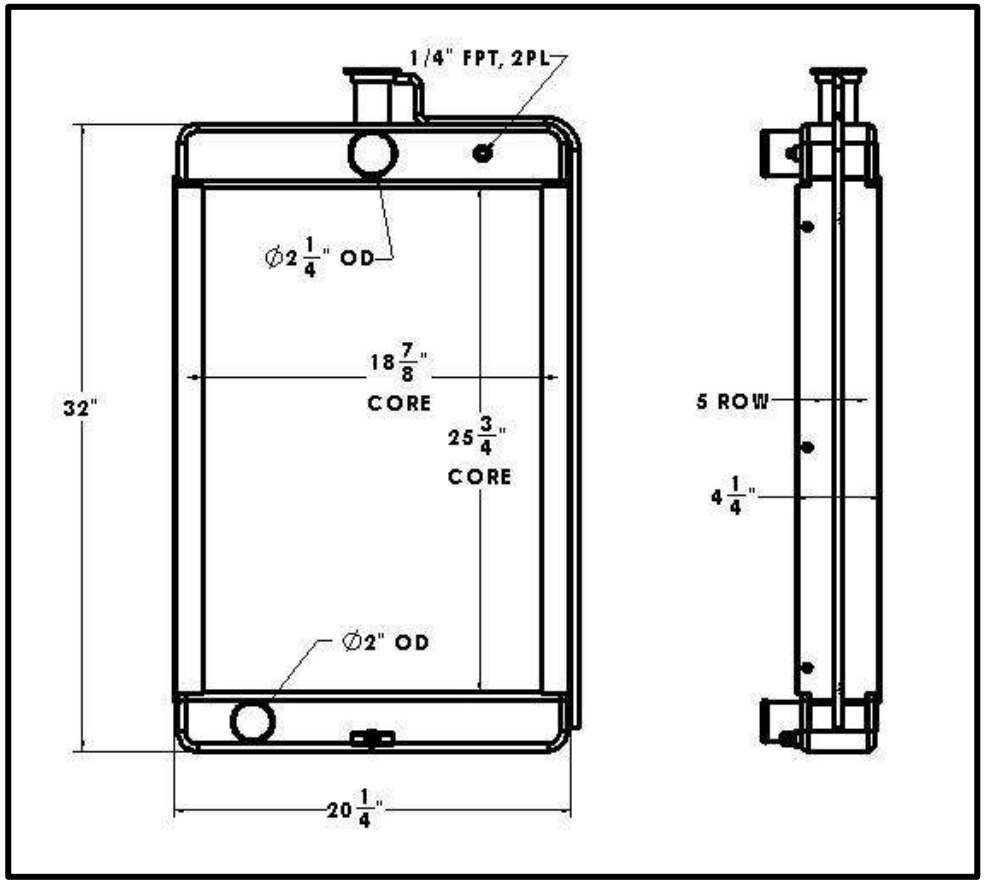

Overall Dimensions: 32” X 20-1/4” X 4-1/4”
Core: 25-3/4” X 19-7/8” X 5 Row
Inlet: 2-1/4” OD
Outlet: 2” OD

Listed dimensions may vary slightly from OE

BGR Part Number: ST-0069-5R-NC
GENERAL RADIATOR PN: 22-3097-01

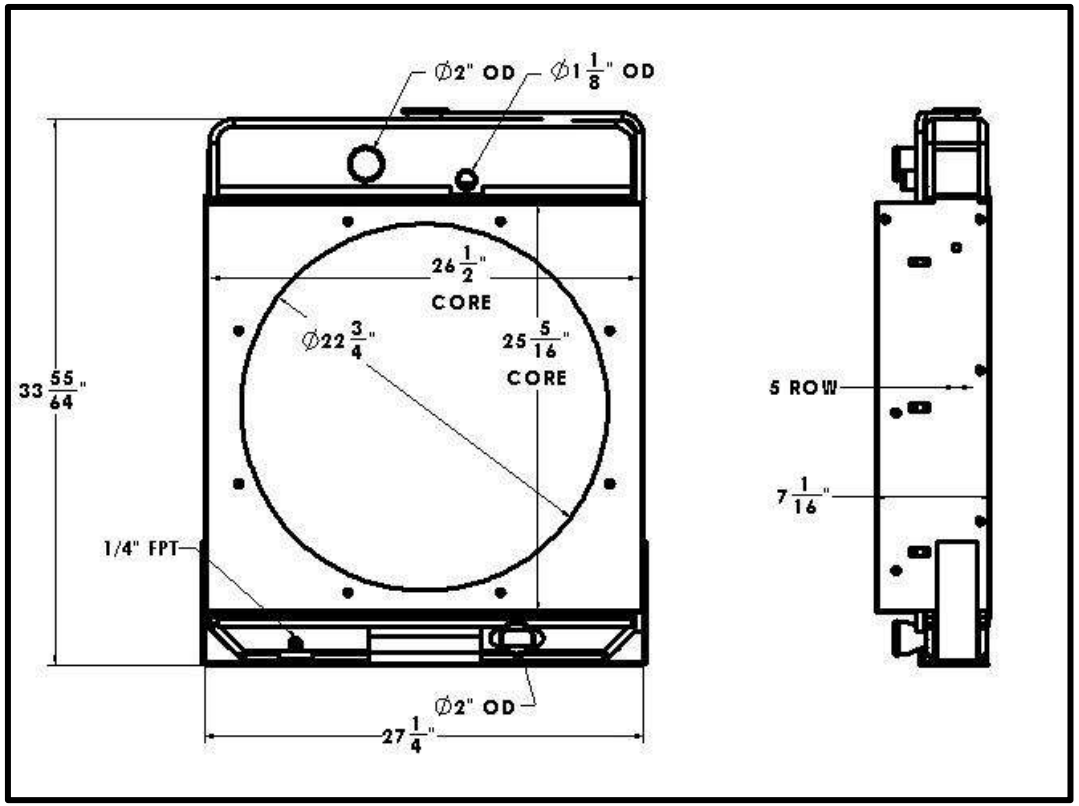

Overall Dimensions: 33-55/64” X 27-1/4” X 7-1/16”
Core: 25-5/16” X 26-1/2” X 5 Row
Inlet: 2” OD
Outlet: 2” OD

Tel 1.800.774.2168
www.bgrradiator.com

BGR Part Number: ST-0070-2VT-EF

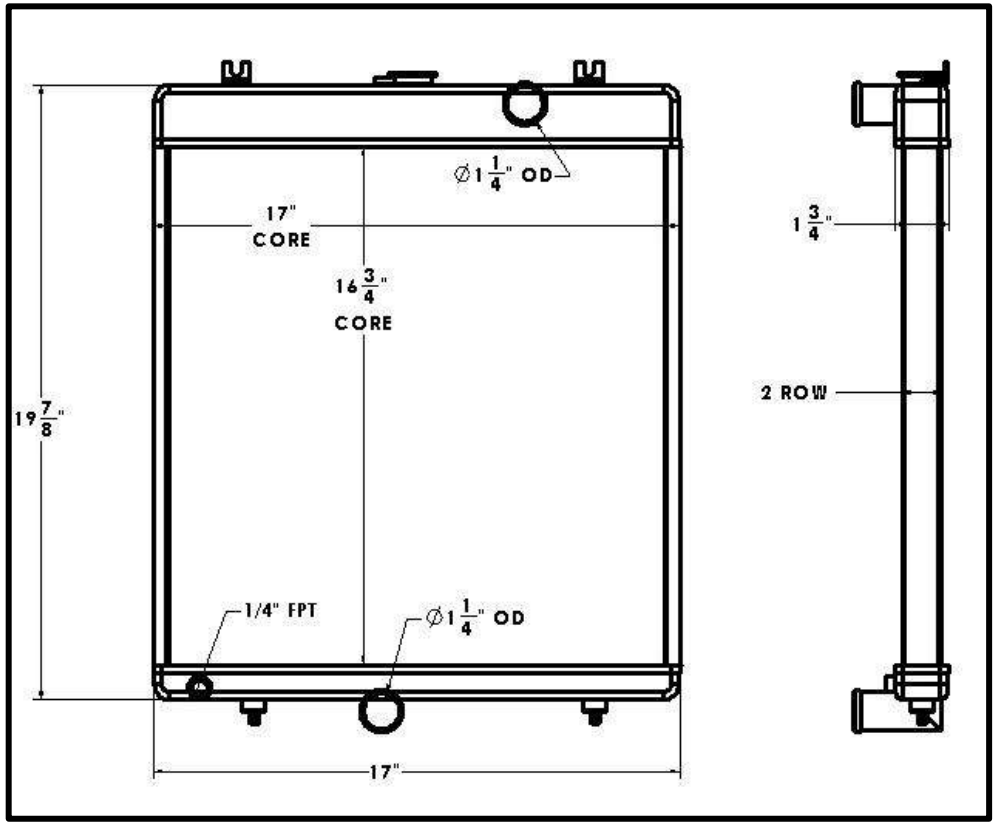

Overall Dimensions: 19-7/8” X 17” X 1-3/4”
Core: 16-3/4” X 17” X 2 Row
Inlet: 1-1/4” OD
Outlet: 1-1/4” OD

Listed dimensions may vary slightly from OE

BGR Part Number: ST-0071-6R-F
ONAN Part Number 130-3557

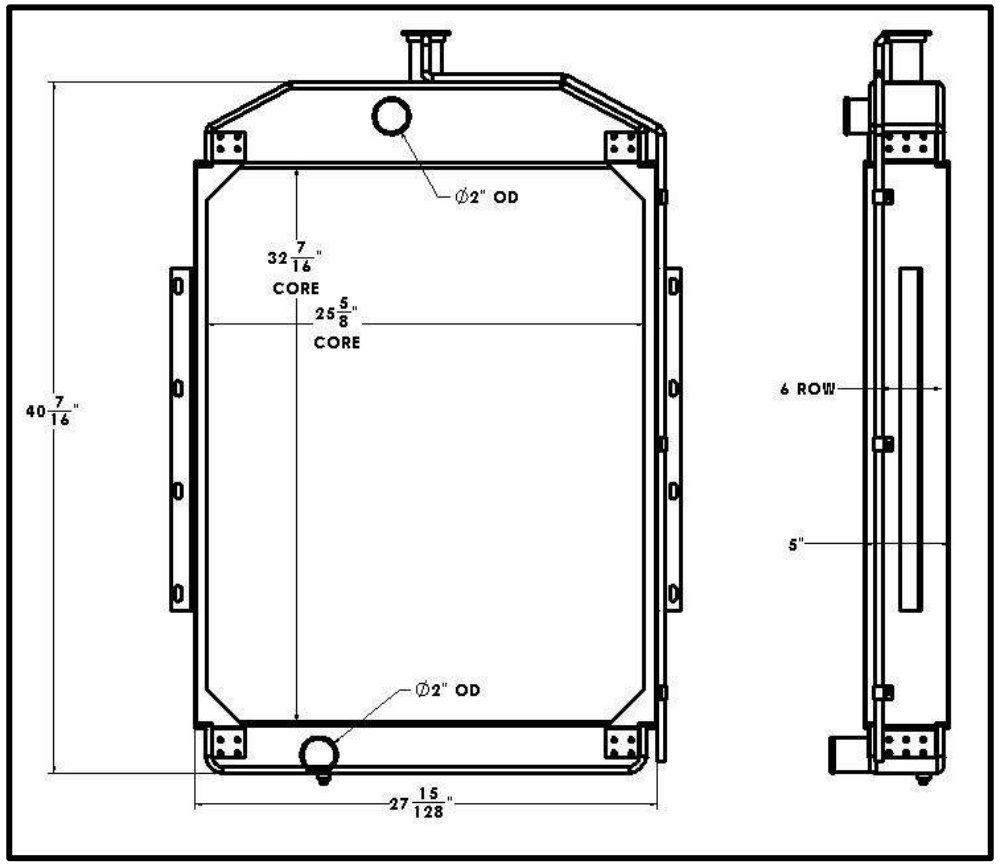

Overall Dimensions: 40-7/16” X 27-15/128” X 5”
Core: 32-7/16” X 25-5/8” X 6 Row
Inlet: 2” OD
Outlet: 2” OD

Tel 1.800.774.2168
www.bgrradiator.com

BGR Part Number: ST-0072-5R-NC
Elliot Magnetek A39157

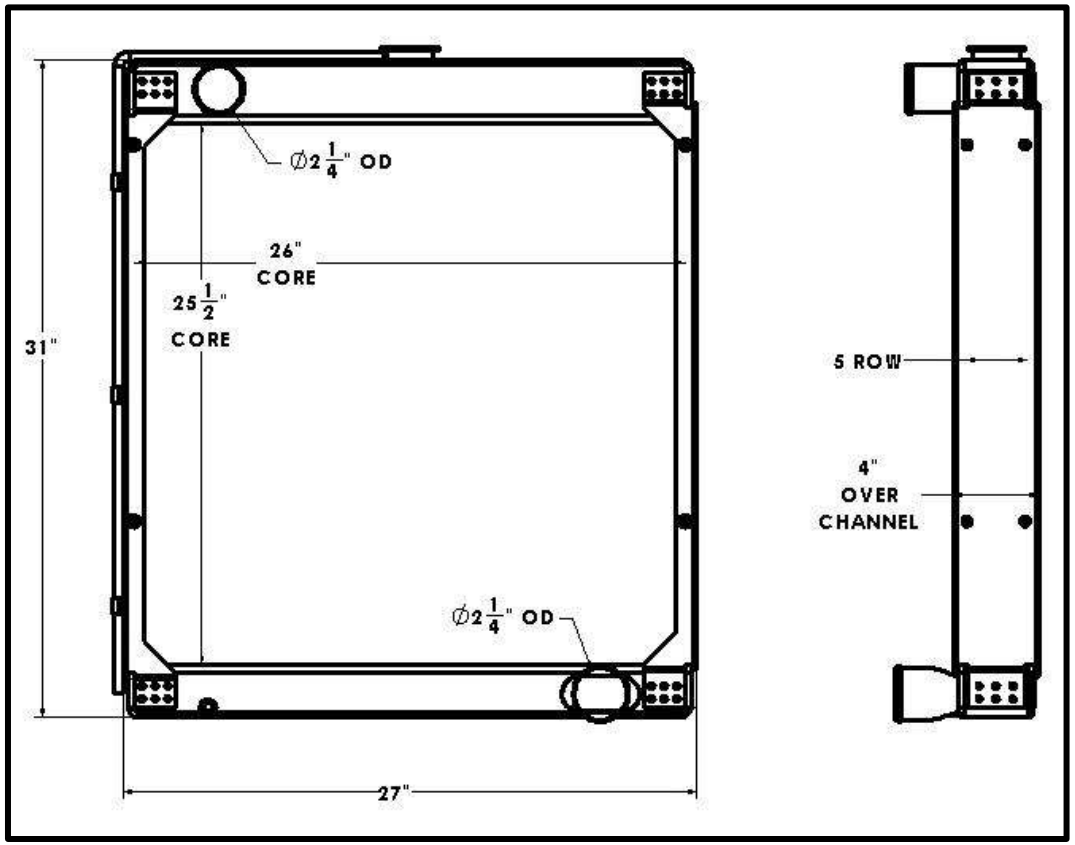

Overall Dimensions: 31” X 27” X 4”
Core: 25-1/2” X 26” X 5 Row
Inlet: 2-1/4” OD
Outlet: 2-1/4” OD

Listed dimensions may vary slightly from OE

BGR Part Number: ST-0073-5R-F
Generac MN SG 125 125KW 8.1L GM

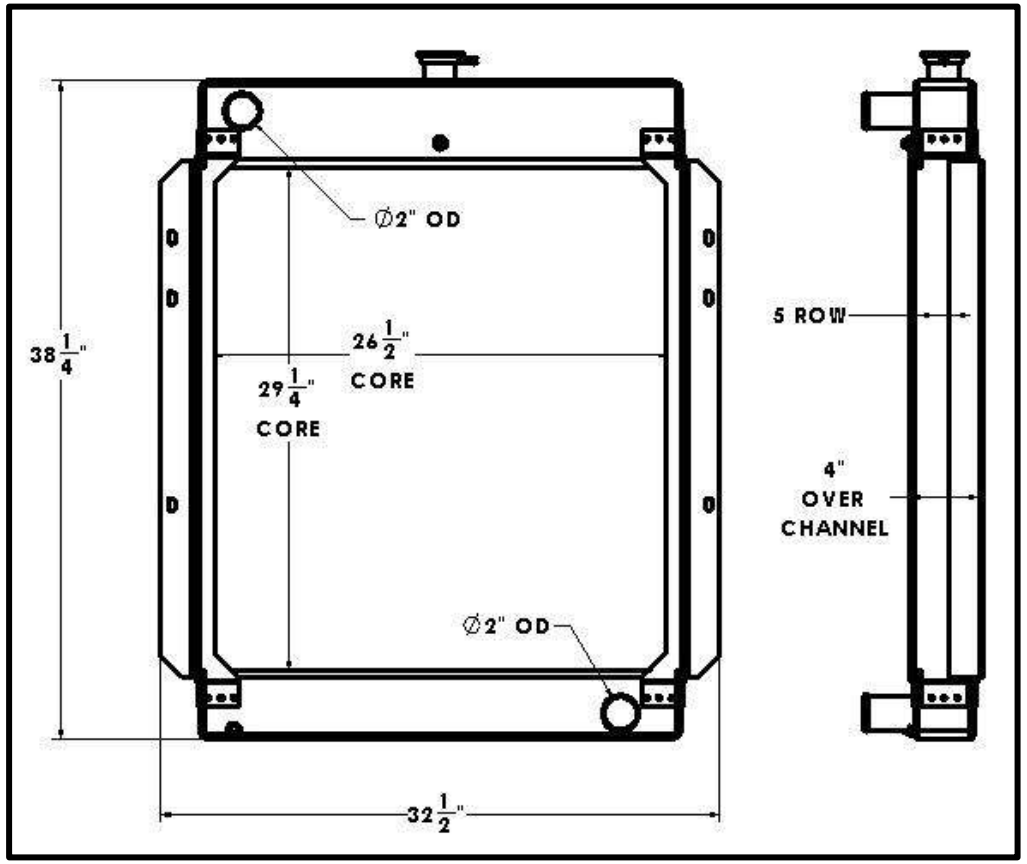

Overall Dimensions: 38-1/4” X 32-1/2” X 4”
Core: 29-1/4” X 26-1/2” X 5 Row
Inlet: 2” OD
Outlet: 2” OD

Tel 1.800.774.2168
www.bgrradiator.com

BGR Part Number: ST-0074-4T-F
Diamond Reo

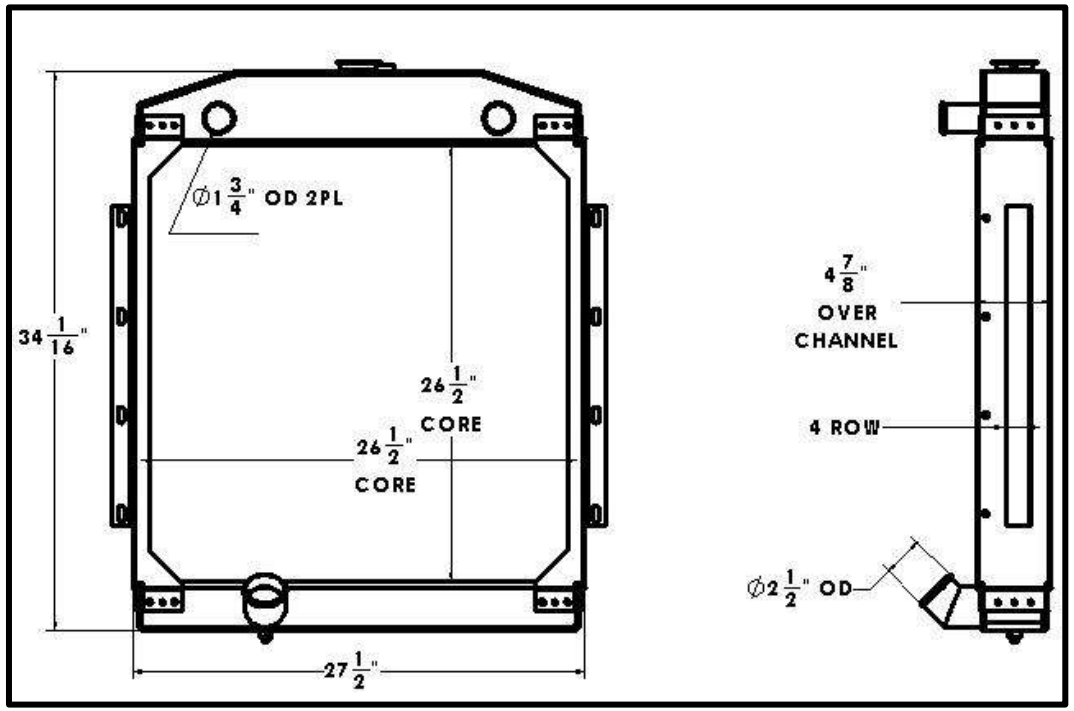

Overall Dimensions: 34-1/16” X 27-1/2” X 4-7/8”
Core: 26-1/2” X 26-1/2” X 4 Row
Inlet: 1-3/4” OD
Outlet: 2-1/2” OD

Listed dimensions may vary slightly from OE

BGR Part Number: ST-0075-5R-NC
HYSTER LIFT

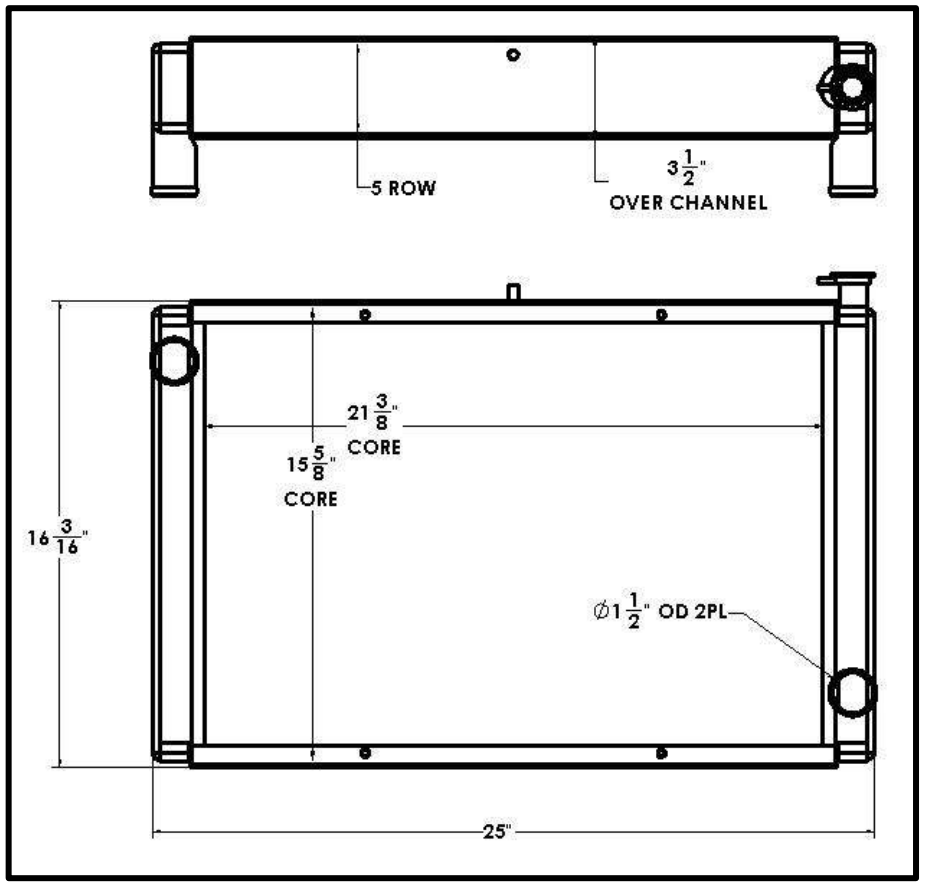

Overall Dimensions: 25” X 16-3/16” X 3-1/2”
Core: 21-3/8” X 15-5/8” X 5 Row
Inlet: 1-1/2” OD
Outlet: 1-1/2” OD

Tel 1.800.774.2168
www.bgrradiator.com

BGR Part Number: ST-0076-7R-EF
Rocore

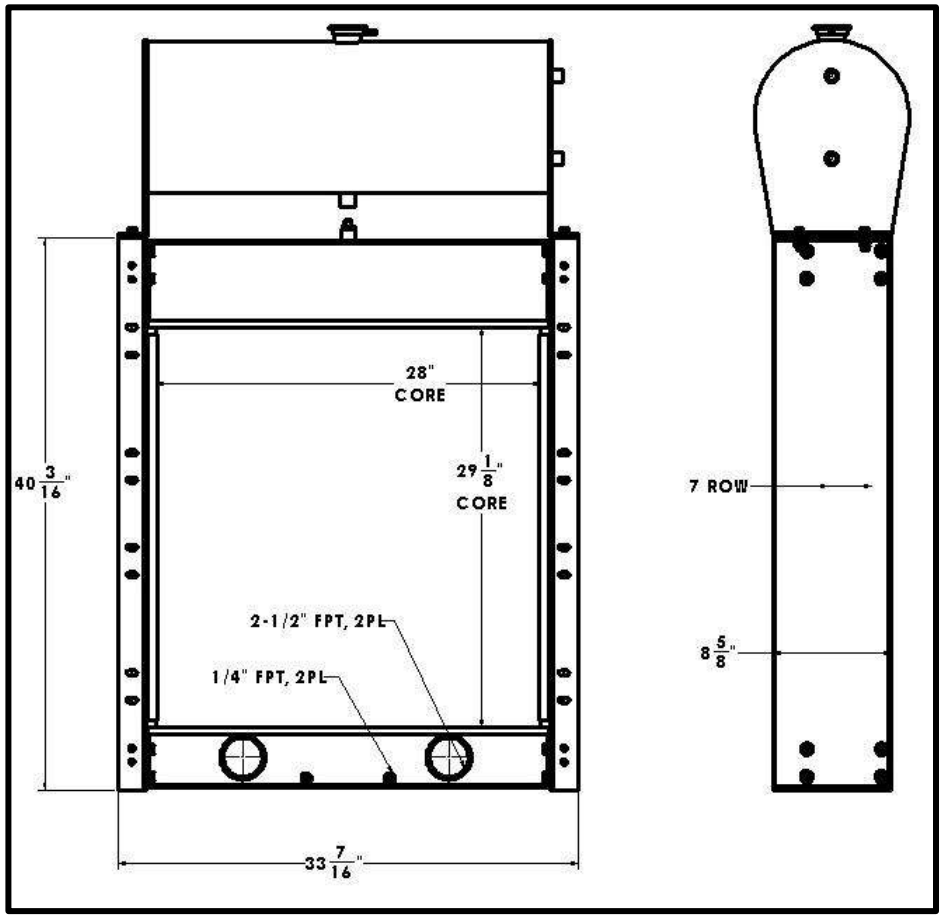

Overall Dimensions: 40-3/16” X 33-7/16” X 8-5/8”
Core: 29-1/8” X 28” X 7 Row
Inlet: 2-1/2” FPT
Outlet: 2-1/2” FPT
SHOWN WITH OPTIONAL SURGE TANK

Listed dimensions may vary slightly from OE

BGR Part Number: ST-0077-5R-NC
CoPAR C381-014-0001

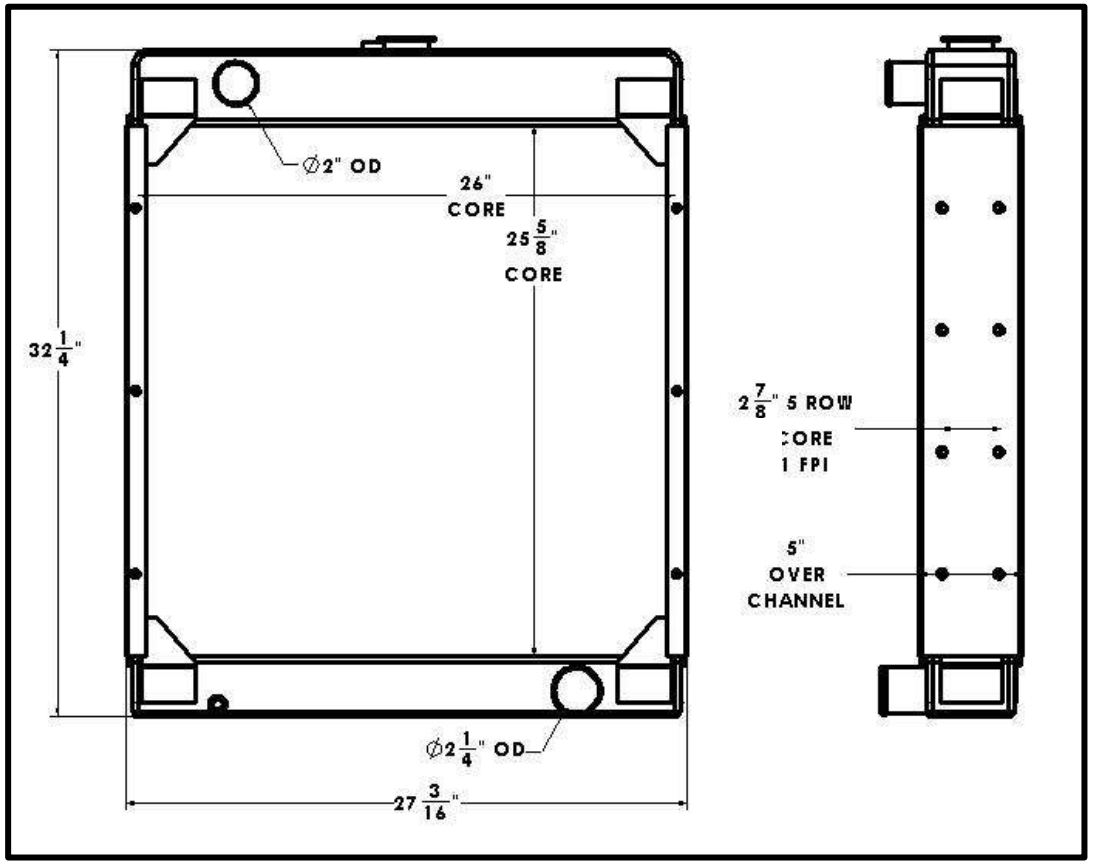

Overall Dimensions: 32-1/4” X 27-3/16” X 5”
Core: 25-5/8” X 26” X 5 Row
Inlet: 2” OD
Outlet: 2-1/4” OD

Tel 1.800.774.2168
www.bgrradiator.com

BGR Part Number: ST-0078-5R-F

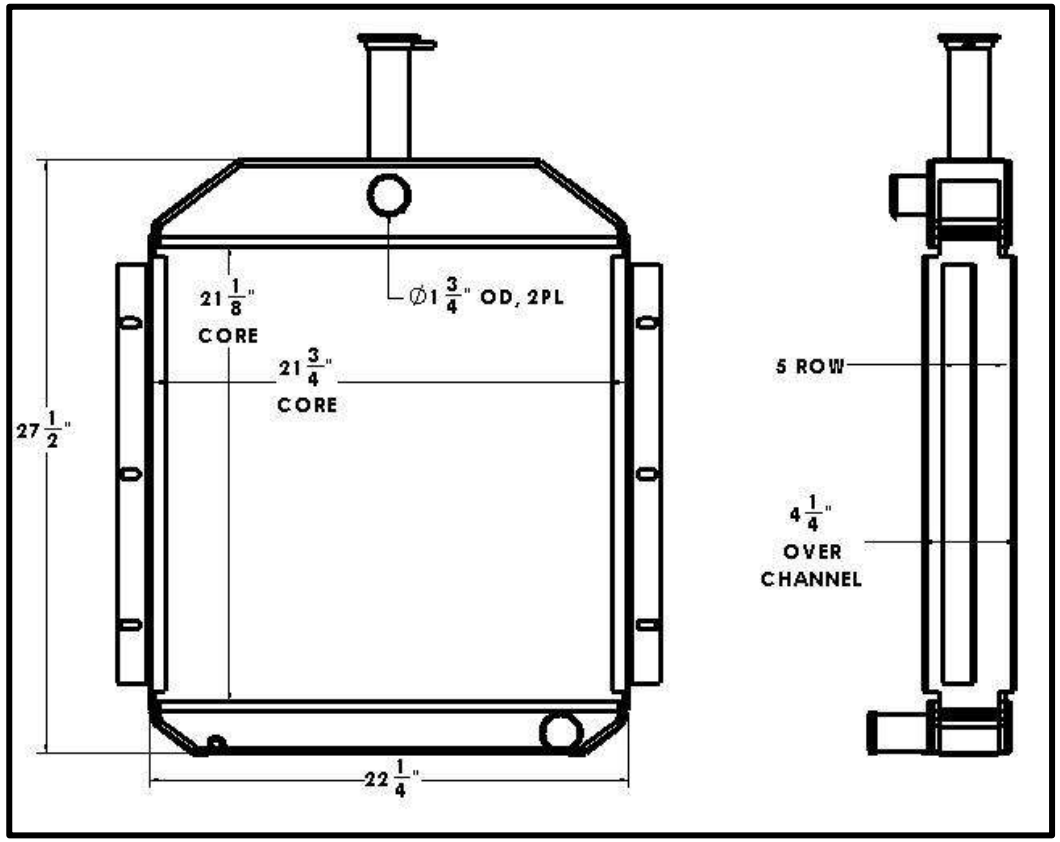

Overall Dimensions: 27-1/2” X 22-1/4” X 4-1/4”
Core: 21-1/8” X 21-3/4” X 5 Row
Inlet: 1-3/4” OD
Outlet: 1-3/4” OD

Listed dimensions may vary slightly from OE

BGR Part Number: ST-0079-4I-NC
Modine 1A19157 , GM24868

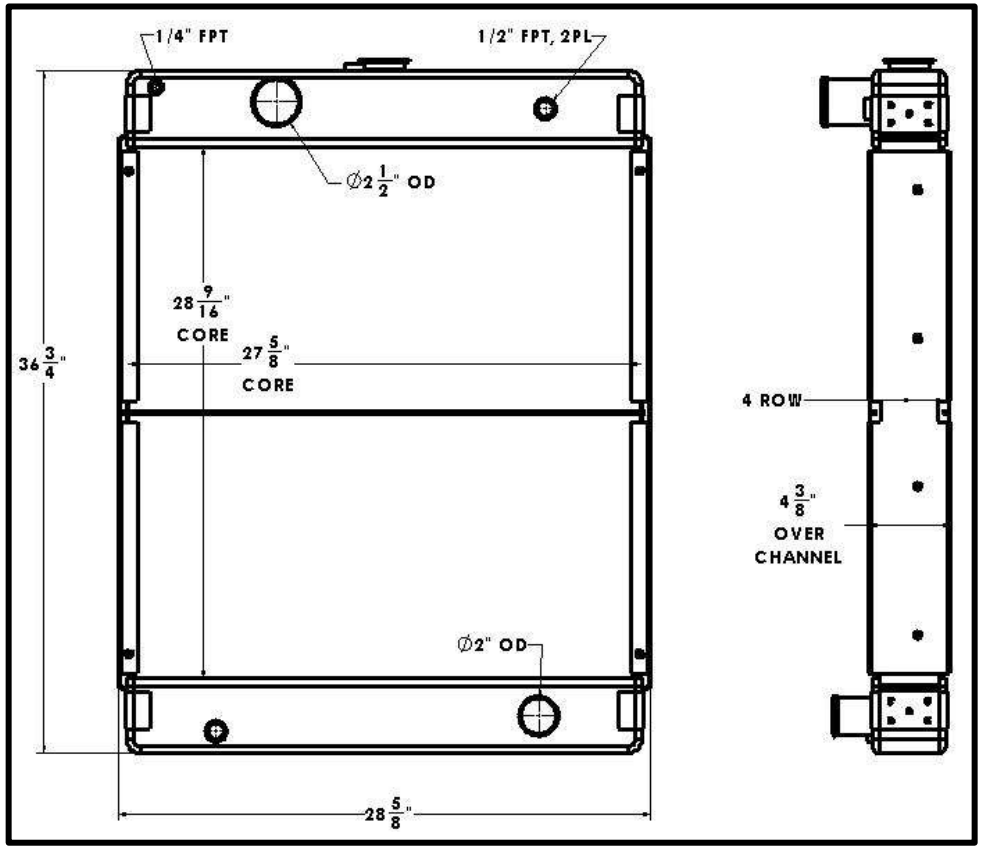

Overall Dimensions: 36-3/4” X 28-5/8” X 4-3/8”
Core: 28-9/16” X 27-5/8” X 4 Row
Inlet: 2-1/2” OD
Outlet: 2” OD

Tel 1.800.774.2168
www.bgrradiator.com

BGR Part Number: ST-0080-2VTW-EF

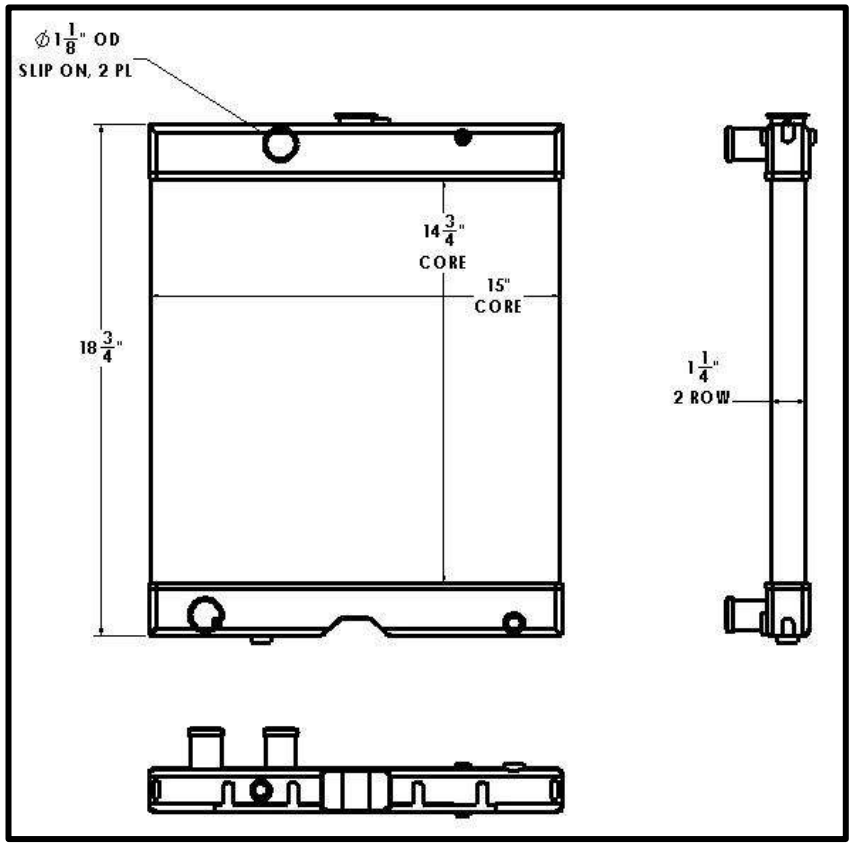

Overall Dimensions: 18-3/4” X 15” X 2”
Core: 14-3/4” X 15” X 2 Row
Inlet: 1-1/8” OD
Outlet: 1-1/8” OD

Listed dimensions may vary slightly from OE

BGR Part Number: ST-0081-5N-NC

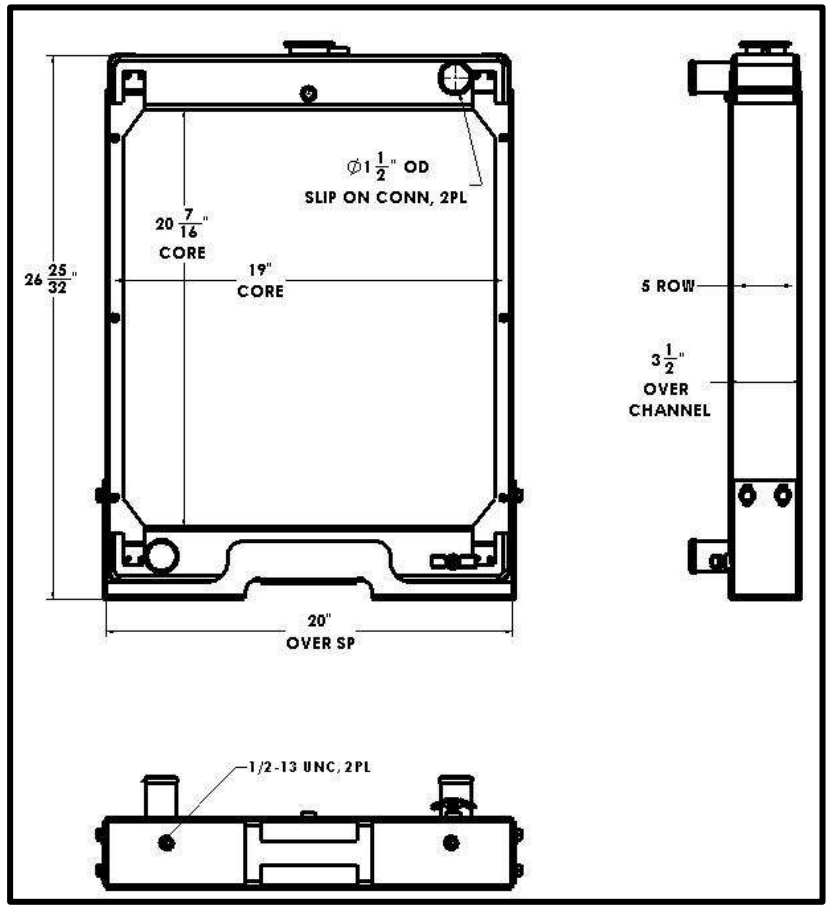

Overall Dimensions: 26-25/32” X 20” X 3-1/2”
Core: 20-7/16” X 19” X 5 Row
Inlet: 1-1/2” OD
Outlet: 1-1/2” OD

Tel 1.800.774.2168
www.bgrradiator.com

BGR Part Number: ST-0082-5I-NC
ONAN PART NUMBER 130-2667

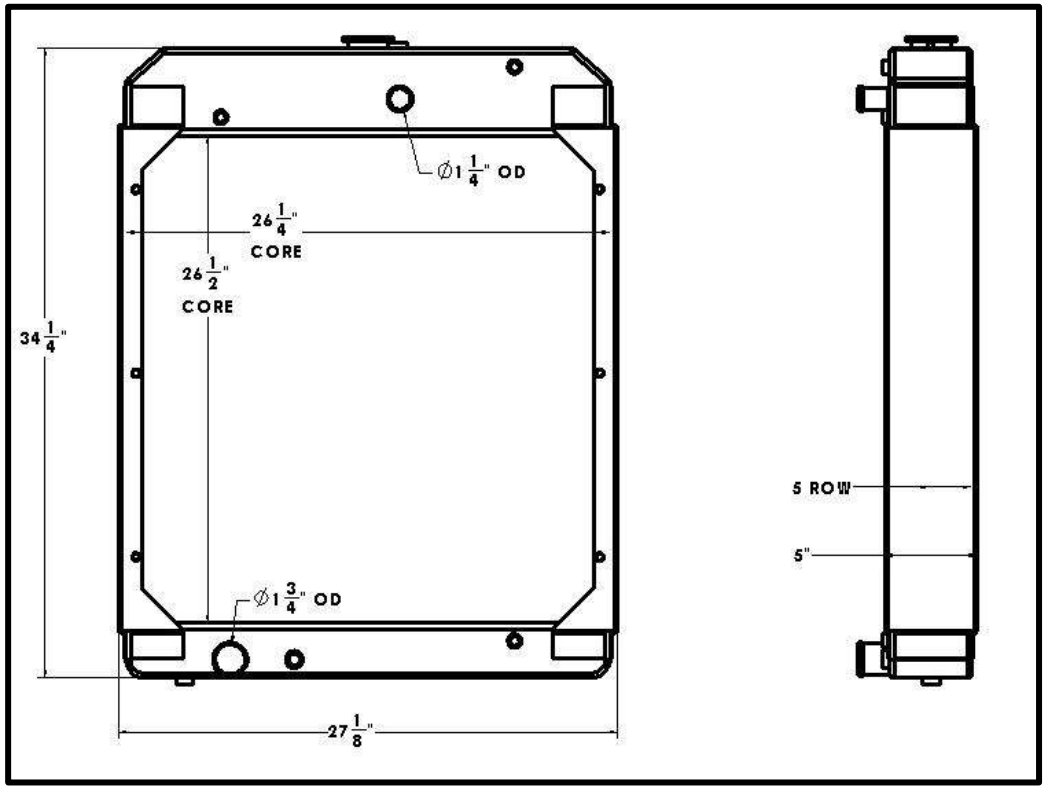

Overall Dimensions: 34-1/4” X 27-1/8” X 5”
Core: 26-1/2” X 26-1/4” X 5 Row
Inlet: 1-1/4” OD
Outlet: 1-3/4” OD

Listed dimensions may vary slightly from OE

BGR Part Number: ST-0083-3T-NC
KUBOTA

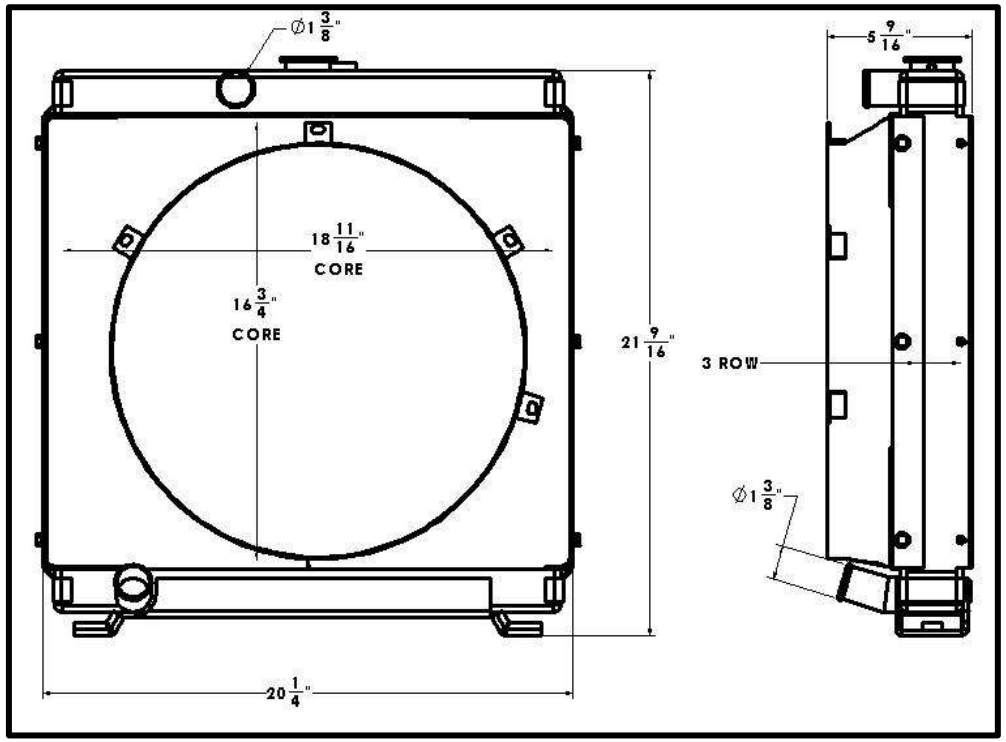

Overall Dimensions: 21-9/16” X 20-1/4” X 5-9/16”
Core: 16-3/4” X 18-11/16” X 3 Row
Inlet: 1-3/8” OD
Outlet: 1-3/8” OD

Tel 1.800.774.2168
www.bgrradiator.com

BGR Part Number: ST-0084-5S-FM

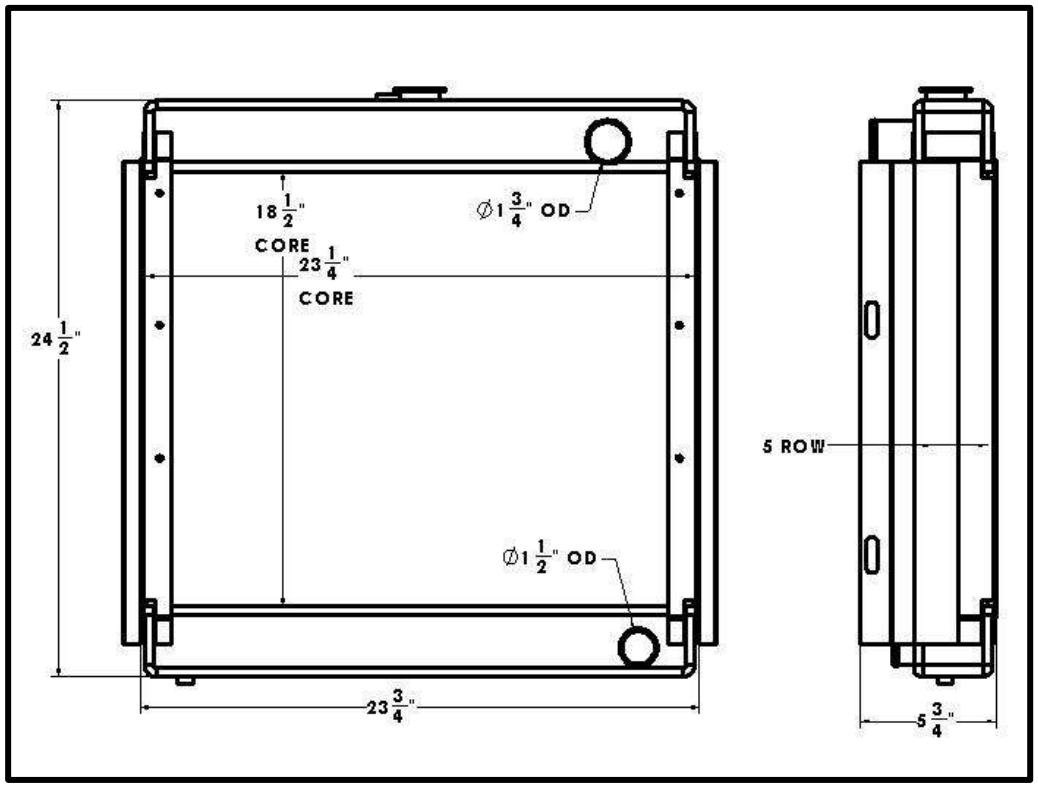

Overall Dimensions: 24-1/2” X 23-3/4” X 5-3/4”
Core: 18-1/2” X 23-1/4” X 5 Row
Inlet: 1-3/4” OD
Outlet: 1-1/2” OD

Listed dimensions may vary slightly from OE

BGR Part Number: ST-0085-4R-EF
GM11650, GM52736 (REV A)
SEE BGR BT-0086-5I FOR REV C, 1A18545

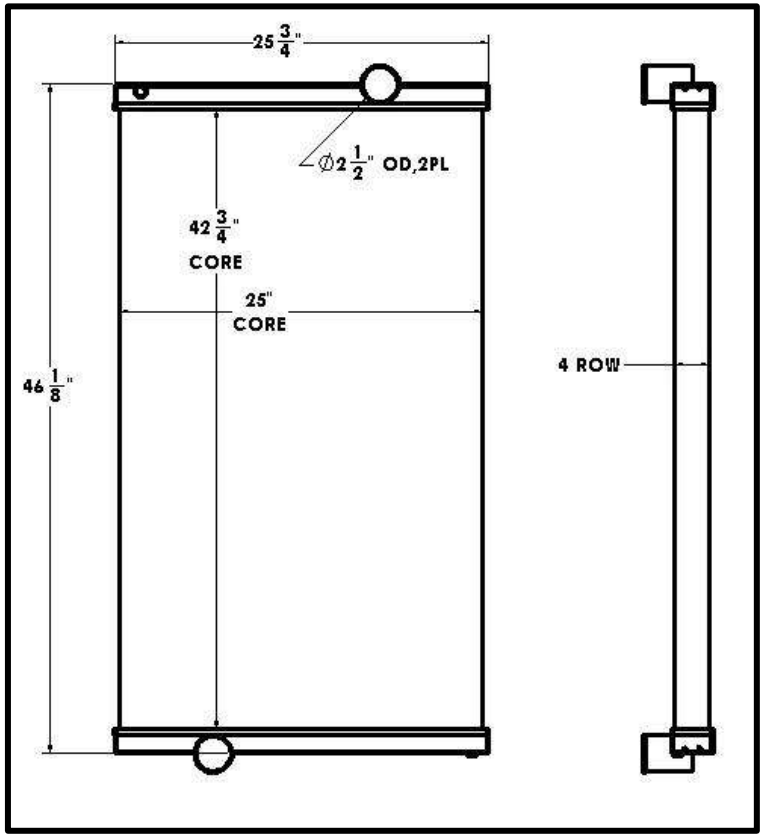

Overall Dimensions: 46-1/8” X 25-3/4”
Core: 42-3/4” X 25” X 4 Row
Inlet: 2-1/2” OD
Outlet: 2-1/2” OD

Tel 1.800.774.2168
www.bgrradiator.com

BGR Part Number: ST-0086-4R-B
MODINE 10958 030782,WHITE D3300T

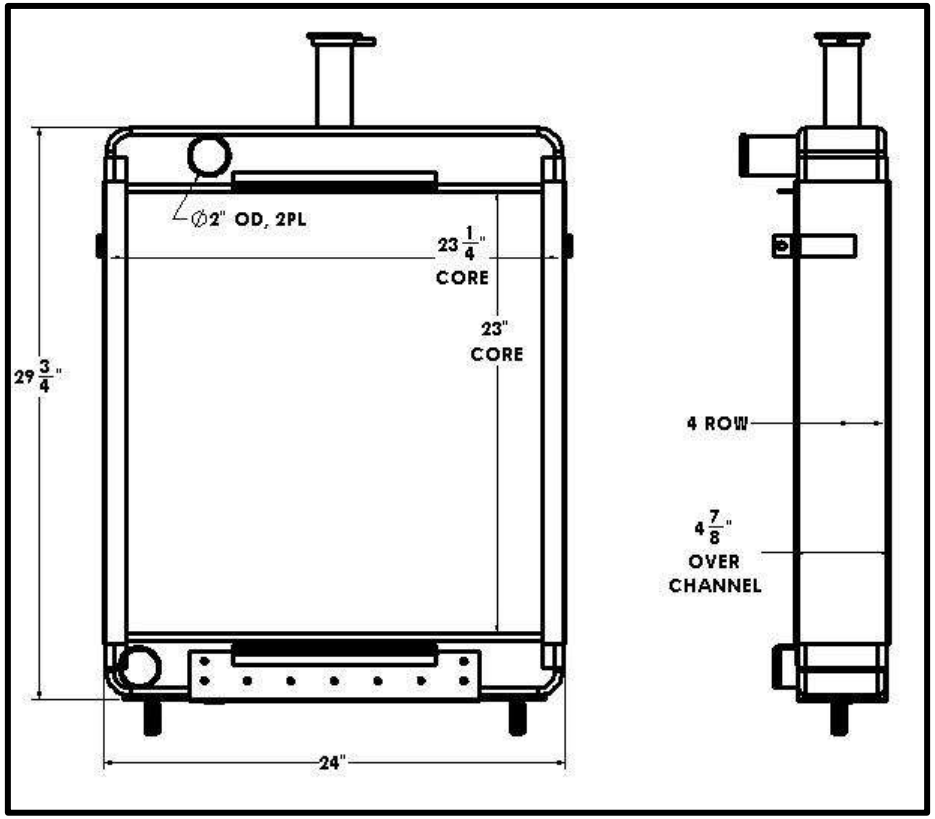

Overall Dimensions: 29-3/4” X 24” X 4-7/8”
Core: 23” X 23-1/4” X 4 Row
Inlet: 2” OD
Outlet: 2” OD
ALSO AVAILABLE WITH 5 ROWS

Listed dimensions may vary slightly from OE

BGR Part Number: ST-0087-6R-NC
KOHLER 150REOZJD GM31839 RAD GROUP

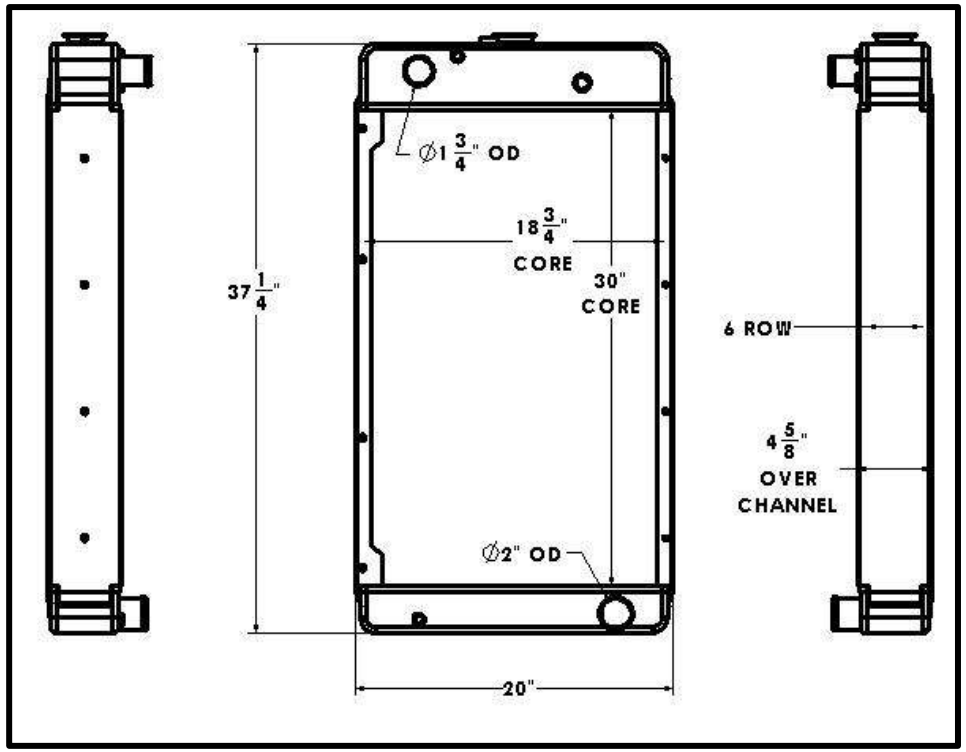

Overall Dimensions: 37-1/4” X 20” X 4-5/8”
Core: 30” X 18-3/4” X 6 Row
Inlet: 1-3/4” OD
Outlet: 2” OD

Tel 1.800.774.2168
www.bgrradiator.com

BGR Part Number: ST-0088-4S-NC
A2556072 22-4913

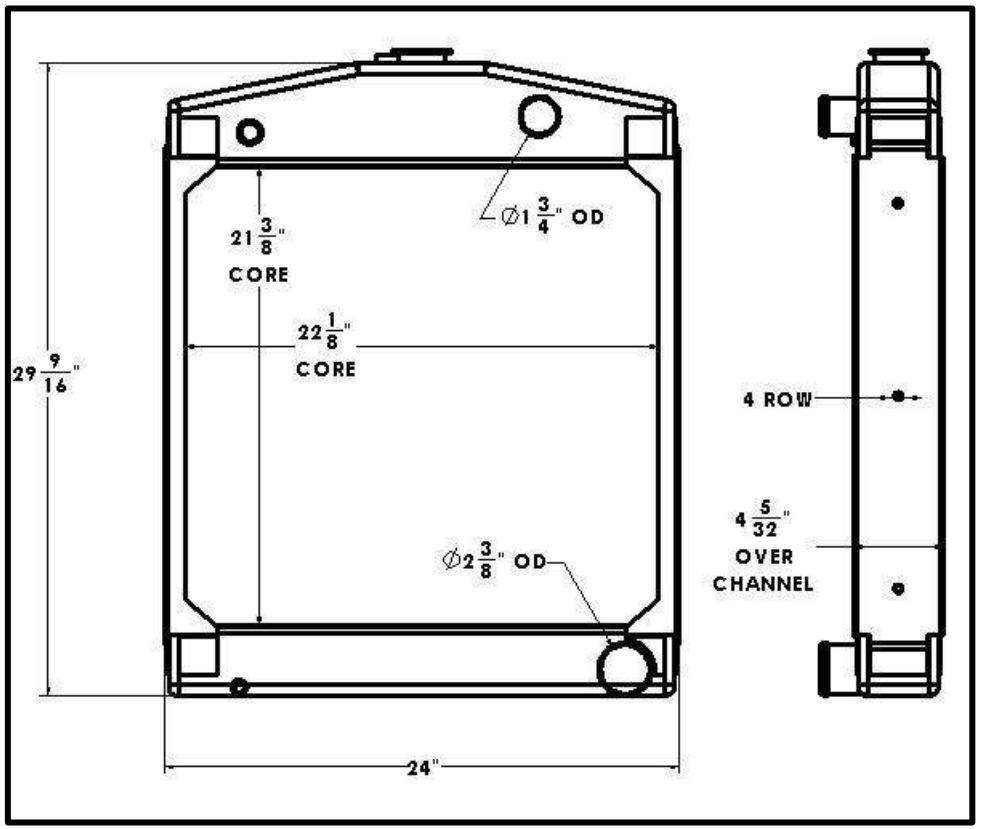

Overall Dimensions: 29-9/16” X 24” X 4-5/32”
Core: 21-3/8” X 22-1/8” X 4 Row
Inlet: 1-3/4” OD
Outlet: 2-3/8” OD

Listed dimensions may vary slightly from OE

BGR Part Number: ST-0089-5R-NC
MODINE 1A18653, GM 14096

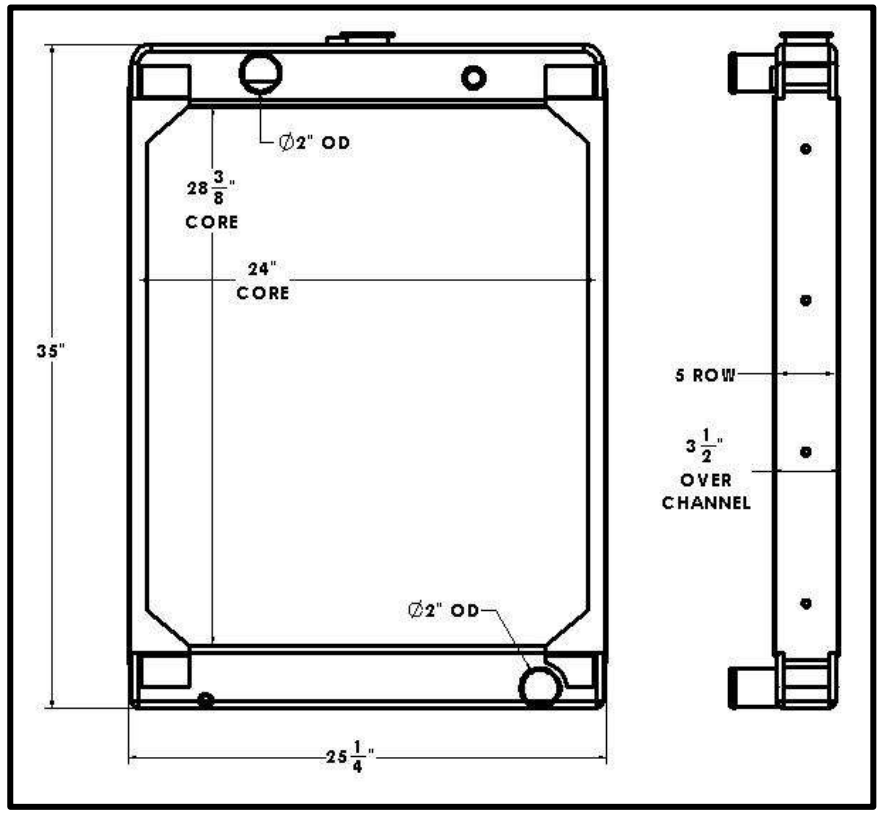

Overall Dimensions: 35” X 25-1/4” X 3-1/2”
Core: 28-3/8” X 24” X 5 Row
Inlet: 2” OD
Outlet: 2” OD

Tel 1.800.774.2168
www.bgrradiator.com

BGR Part Number: ST-0090-3R-B
1989 FORD BRONCO II

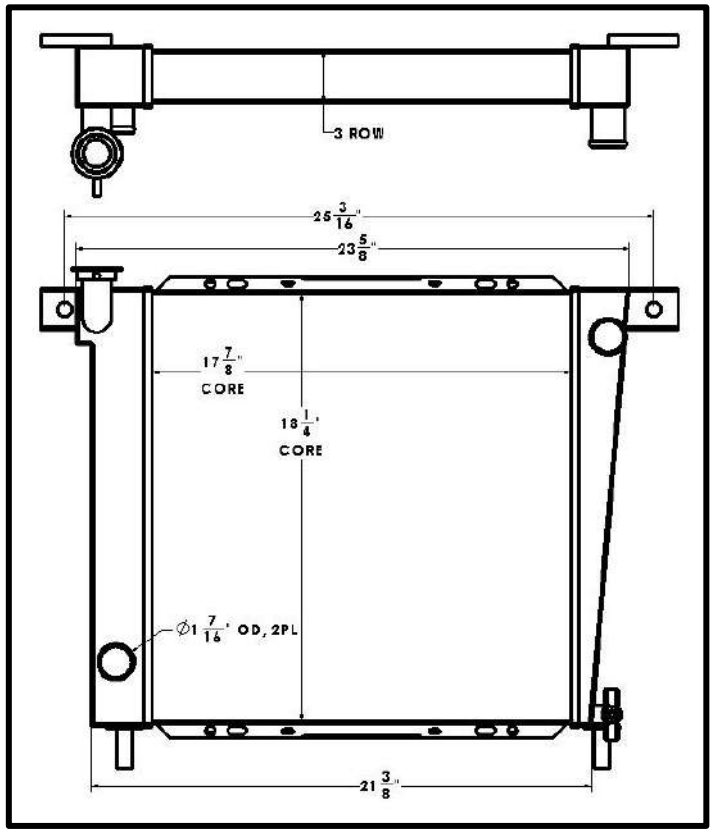

Overall Dimensions: 23-5/8” X 18-1/4” X 3-1/8”
Core: 17-7/8” X 18-1/4” X 3 Row
Inlet: 1-7/16” OD
Outlet: 1-7/16” OD

Listed dimensions may vary slightly from OE

BGR Part Number: ST-0091-5XT-EF
CATERPILLAR

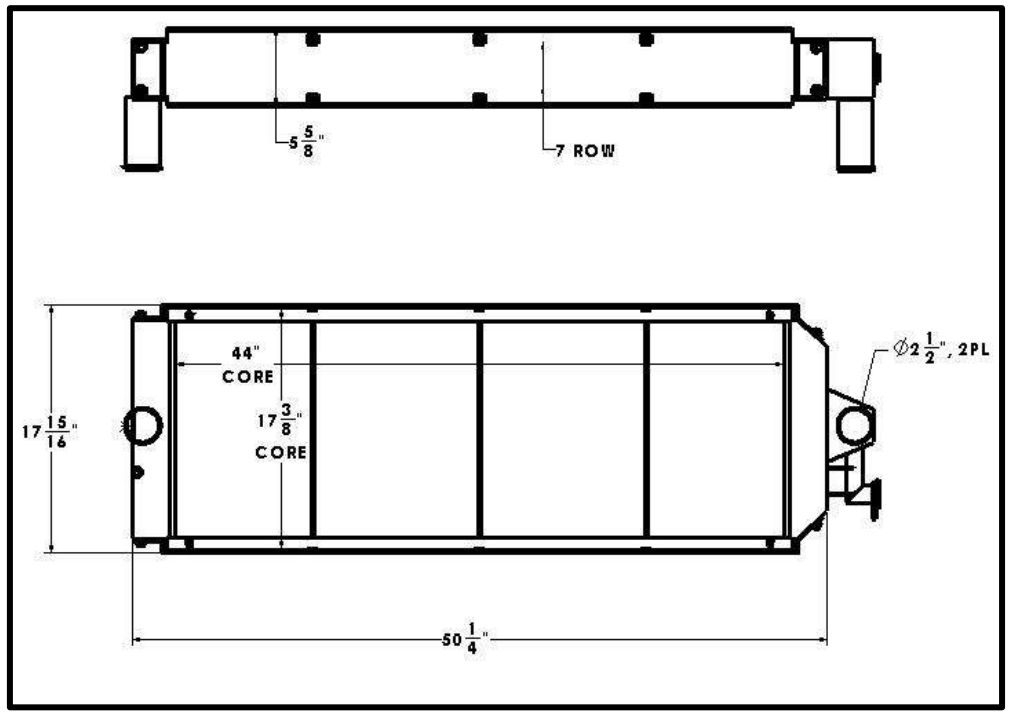

Overall Dimensions: 50-1/4” X 17-15/16” X 5-5/8”
Core: 44” X 17-3/8” X 7 Row
Inlet: 2-1/2” OD
Outlet: 2-1/2” OD

Tel 1.800.774.2168
www.bgrradiator.com

BGR Part Number: ST-0092-5R-F
GENERAC OG1933B 5 ROWS

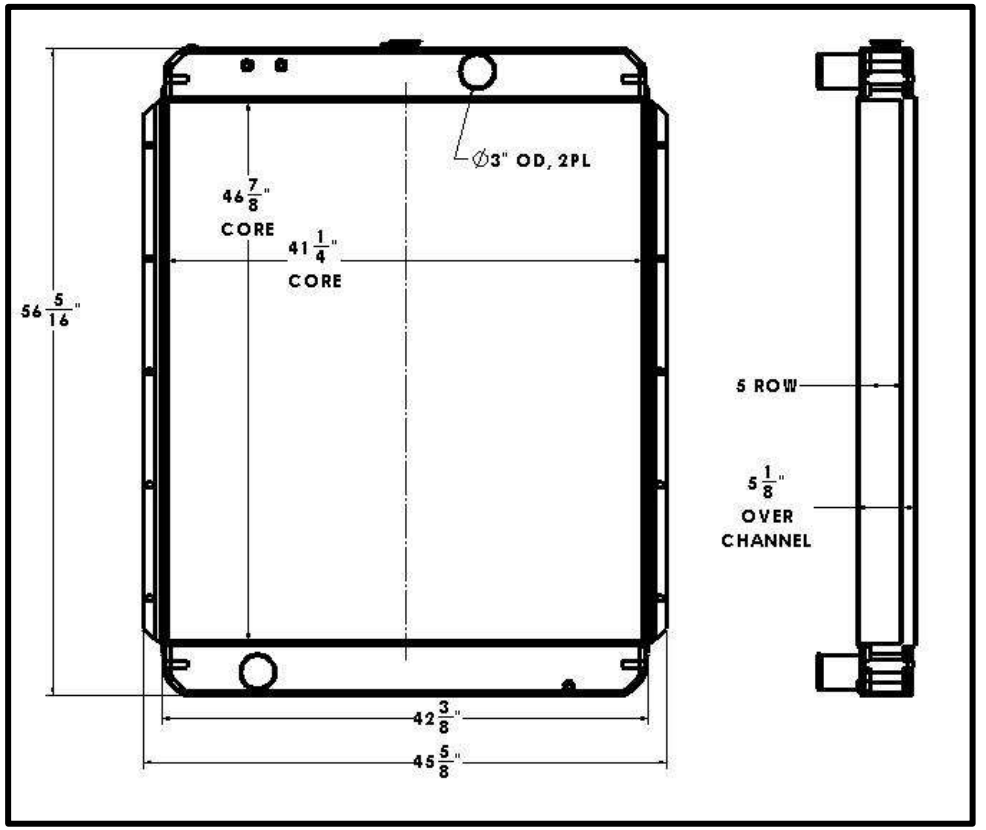

Overall Dimensions: 56-5/16” X 42-3/8” X 5-1/8”
Core: 46-7/8” X 41-1/4” X 5 Row
Inlet: 3” OD
Outlet: 3” OD
SEE BGR PN ST-0050-6R-F FOR 6 ROW VERSION

Listed dimensions may vary slightly from OE

BGR Part Number: ST-0093-5R-NC
ONAN PART NUMBER 130-0834

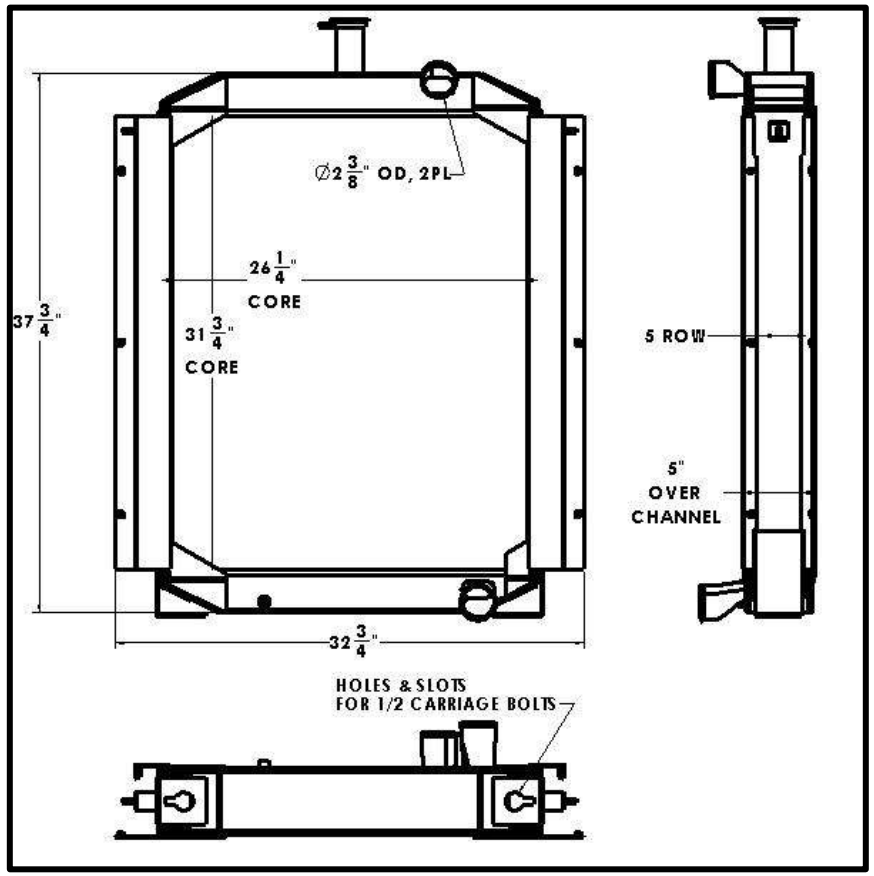

Overall Dimensions: 37-3/4” X 32-3/4” X 5”
Core: 31-3/4” X 26-1/4” X 5 Row
Inlet: 2-3/8” OD
Outlet: 2-3/8” OD

Tel 1.800.774.2168
www.bgrradiator.com

BGR Part Number: ST-0094-4I-F
ONAN PART NUMBER 130-3792

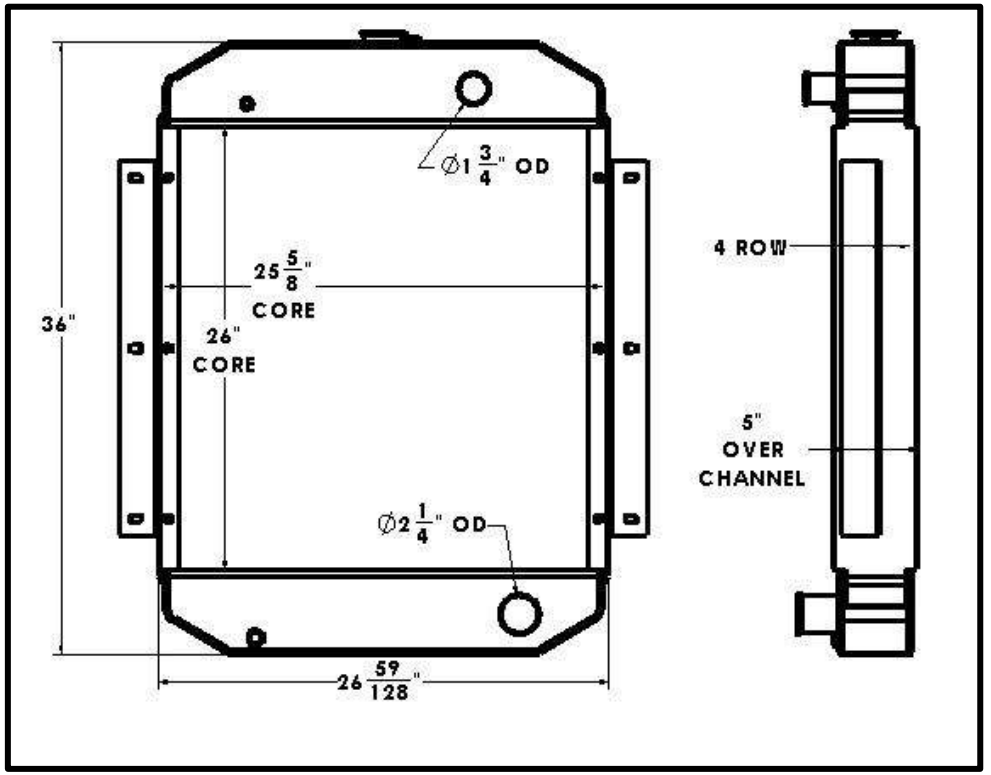

Overall Dimensions: 36” X 26-59/128” X 5”
Core: 26” X 25-5/8” X 4 Row
Inlet: 1-3/4” OD
Outlet: 2-1/4” OD

Listed dimensions may vary slightly from OE

BGR Part Number: ST-0095-2VTU-F
GENERAC 69593A 1002168

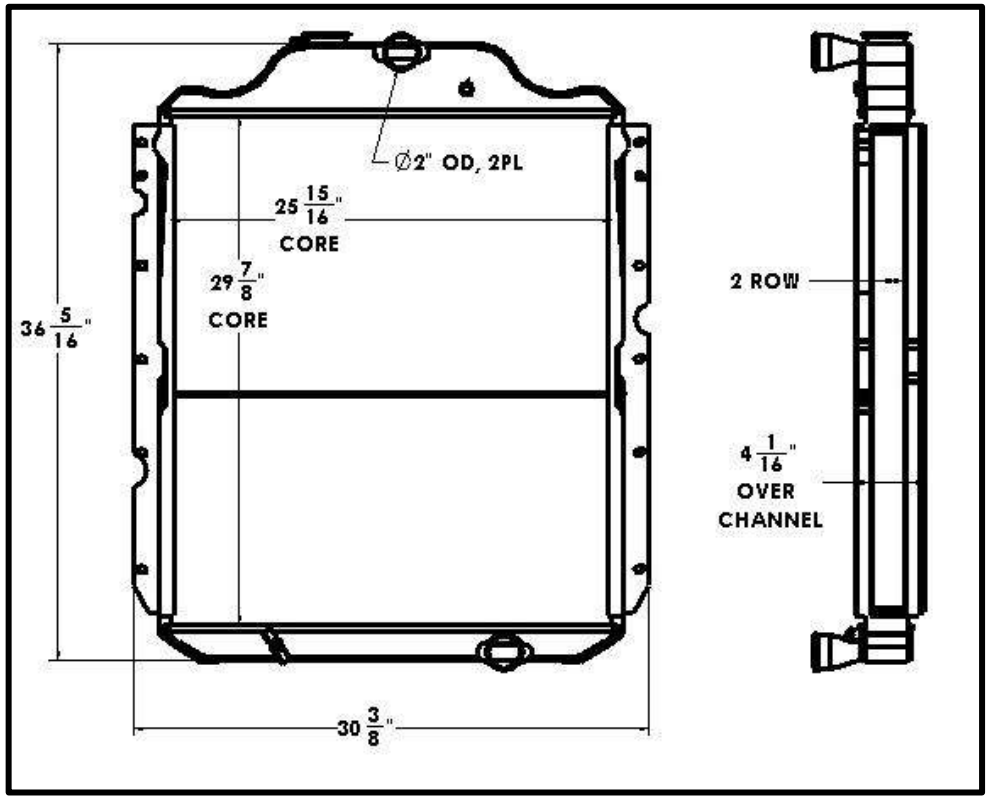

Overall Dimensions: 36-5/16” X 30-3/8” X 4-1/16”
Core: 29-7/8” X 25-15/16” X 2 Row
Inlet: 2” OD
Outlet: 2” OD

Tel 1.800.774.2168
www.bgrradiator.com

BGR Part Number: ST-0096-3I-F
GENERAC 69593A 1002168 (HEAVY DUTY VERSION),
69592A 1002169 , A0000106639

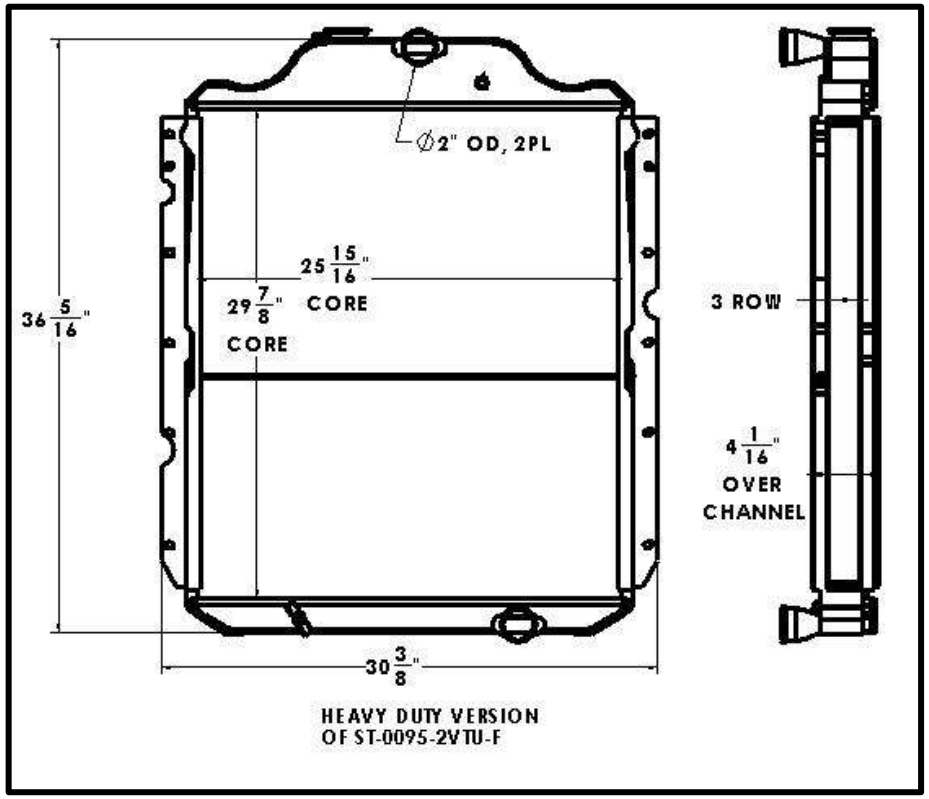

Overall Dimensions: 36-5/16” X 30-3/8” X 4-1/16”
Core: 29-7/8” X 25-15/16” X 3 Row
Inlet: 2” OD
Outlet: 2” OD

Listed dimensions may vary slightly from OE

BGR Part Number: ST-0097-4R-B COVRAD
S9042_91300164, 120-241, 2485B221

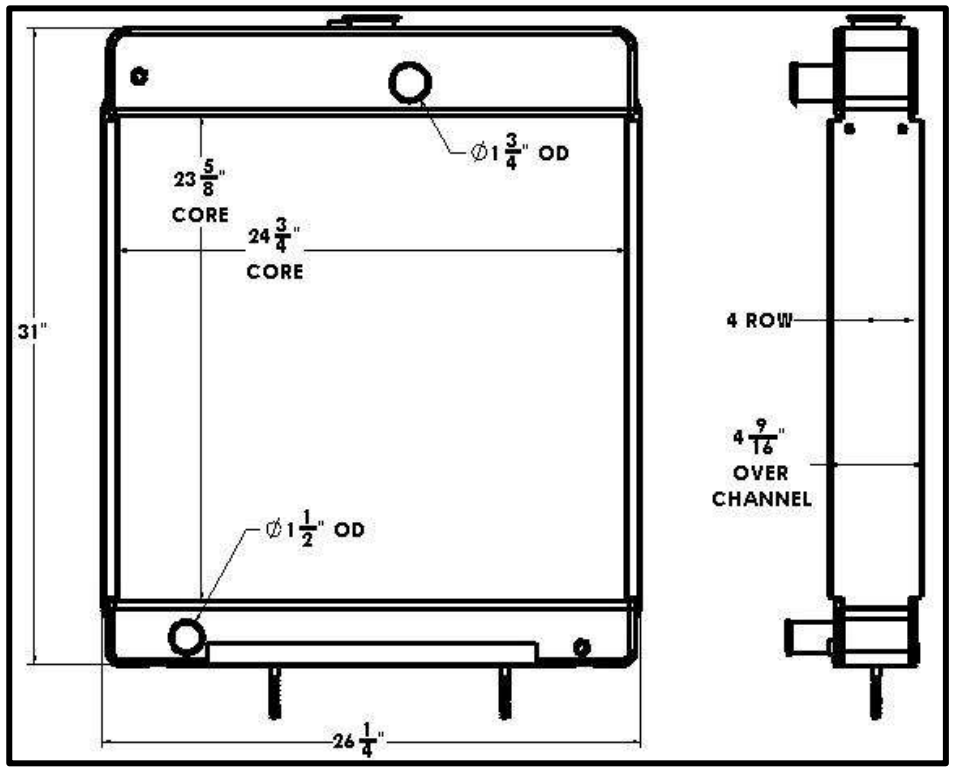

Overall Dimensions: 31” X 26-1/2” 4-9/16”
Core:23-5/8” X 24-3/4” X 4 ROW
Inlet: 1-3/4” OD
Outlet: 1-1/2” OD

Tel 1.800.774.2168
www.bgrradiator.com

BGR Part Number: ST-0098-4R-NC
PSI 32000295 125KW GENSET

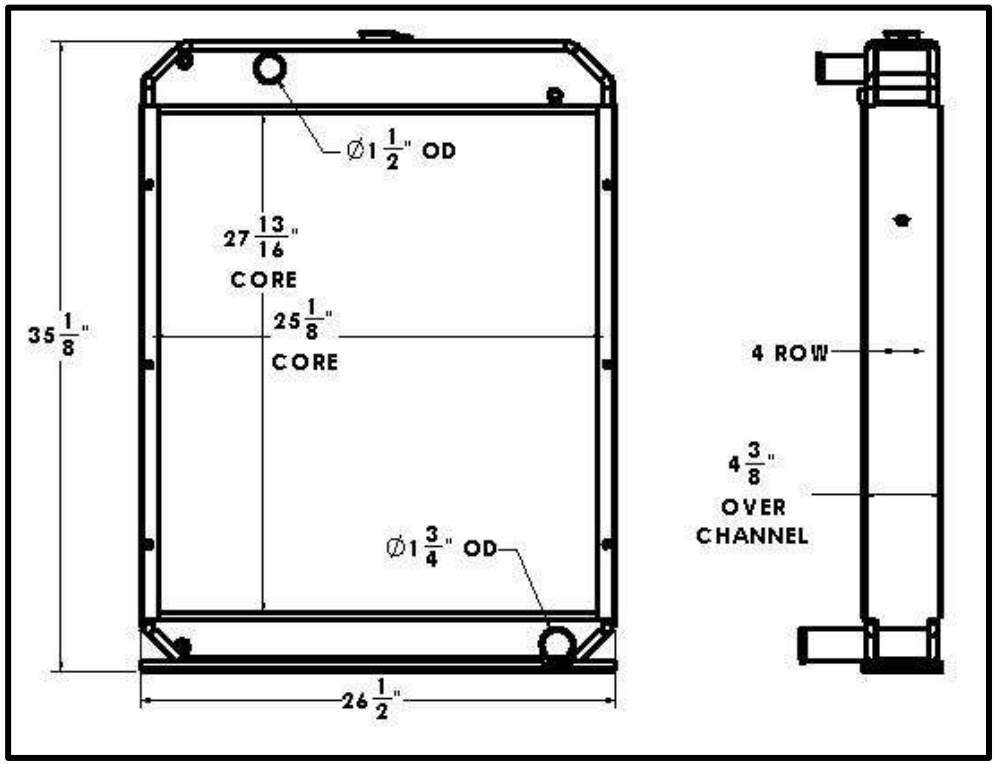

Overall Dimensions: 35-1/8” X 26-1/2” X 4-3/8”
Core: 27-13/16” X 25-1/8” X 4 Row
Inlet: 1-1/2” OD
Outlet: 1-3/4” OD

Listed dimensions may vary slightly from OE

BGR Part Number: ST-0099-5R-NC
KOHLER 80RZ282 SPEC PA-187344-82N

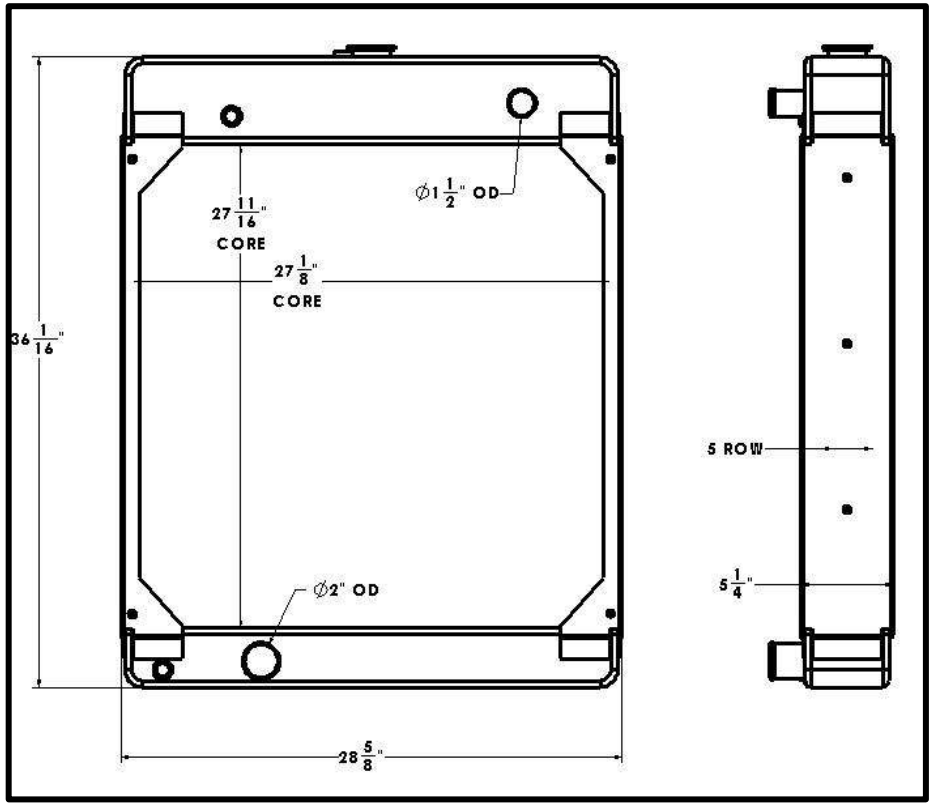

Overall Dimensions: 36-1/16” X 28-5/8” X 5-1/4”
Core: 27-11/16” X 27-1/8” X 5 ROW
Inlet: 1-1/2”OD
Outlet: 2” OD

Tel 1.800.774.2168
www.bgrradiator.com

BGR Part Number: ST-0100-5I-NC
MODINE 12434

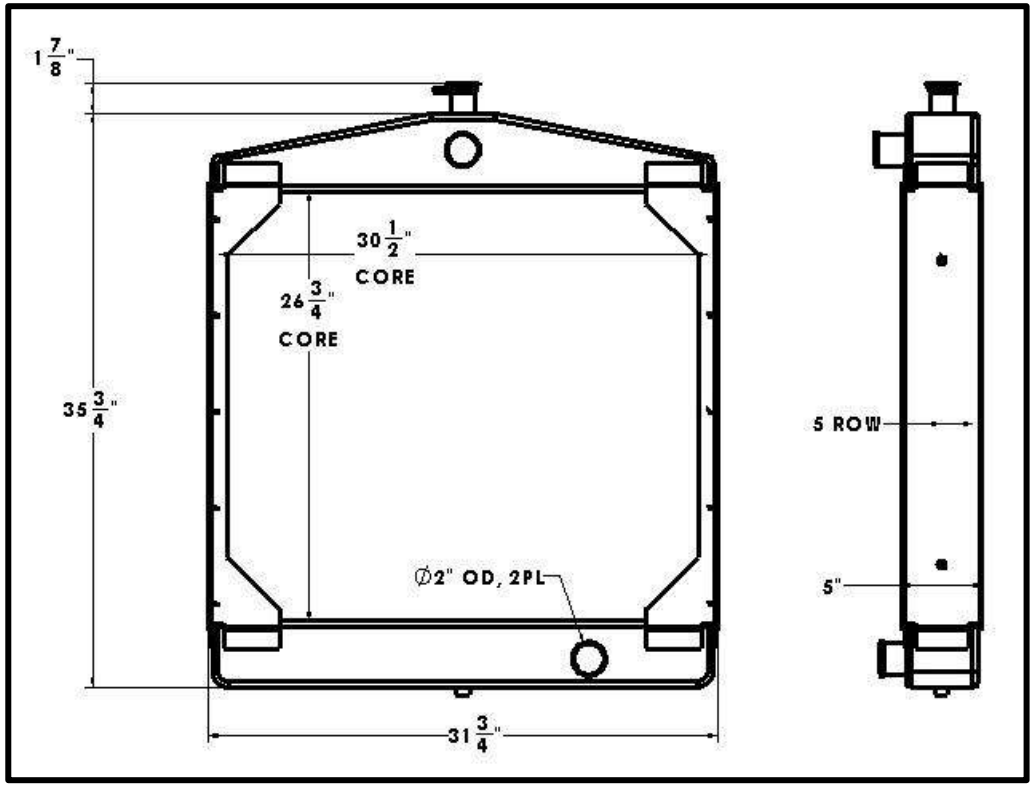

Overall Dimensions: 35-3/4” X 31-3/4” X 5”
Core: 26-3/4” X 30-1/2” X 5 Row
Inlet: 2” OD
Outlet: 2” OD

Listed dimensions may vary slightly from OE

BGR Part Number: ST-0101-5N-F
YOUNG

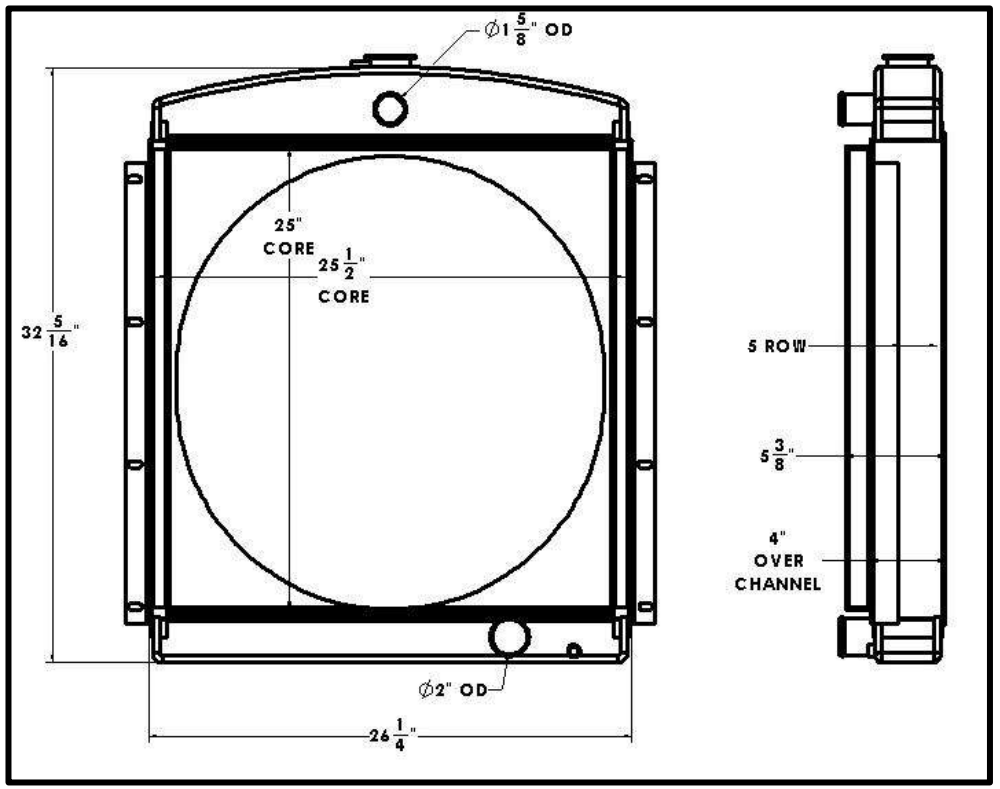

Overall Dimensions: 32-5/16” X 26-1/4” X 4”
Core: 25” X 25-1/2” X 5 ROW
Inlet: 1-5/8”OD
Outlet: 2” OD

Tel 1.800.774.2168
www.bgrradiator.com

BGR Part Number: ST-0102-5I-NC
Modine 1A15268, A273472

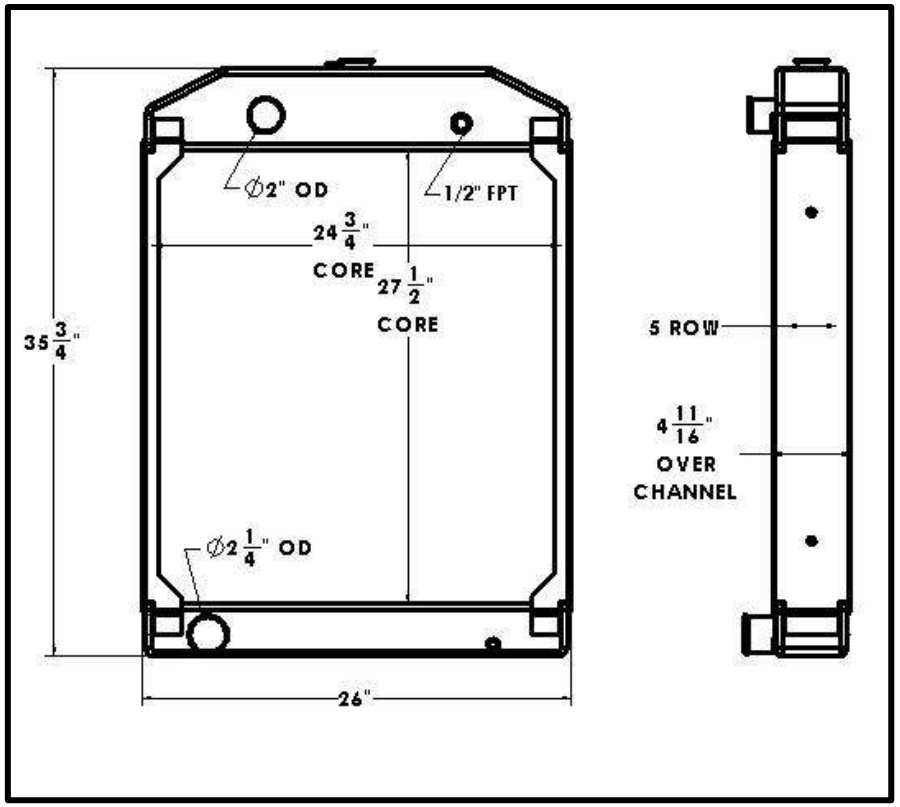

Overall Dimensions: 35-3/4” X 26” X 4-11/16”
Core: 27-1/2” X 24-3/4” X 5 Row
Inlet: 2” OD
Outlet: 2-1/4” OD

Listed dimensions may vary slightly from OE

BGR Part Number: ST-0103-3I-NC

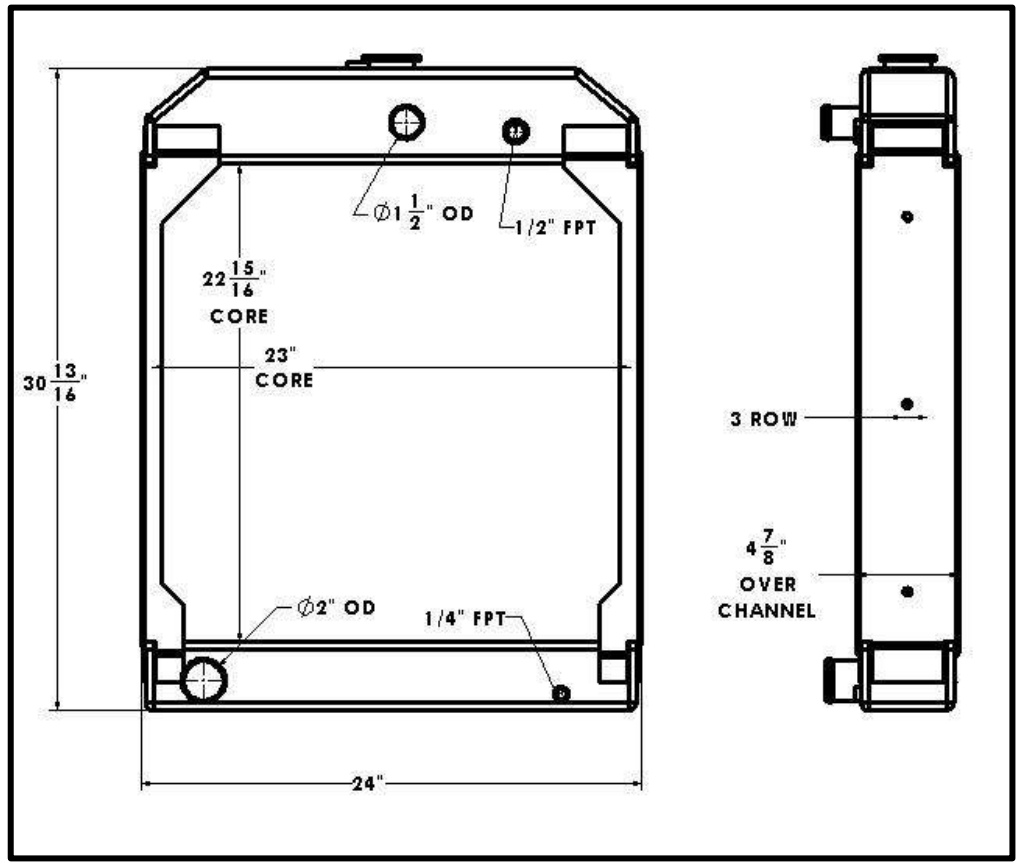

Overall Dimensions: 30-13/16” X 24” X 4-7/8”
Core: 22-15/16” X 23” X 3 ROW
Inlet: 1-1/2”OD
Outlet: 2” OD

Tel 1.800.774.2168
www.bgrradiator.com

BGR Part Number: ST-0104-5I-F
KOHLER A-291407

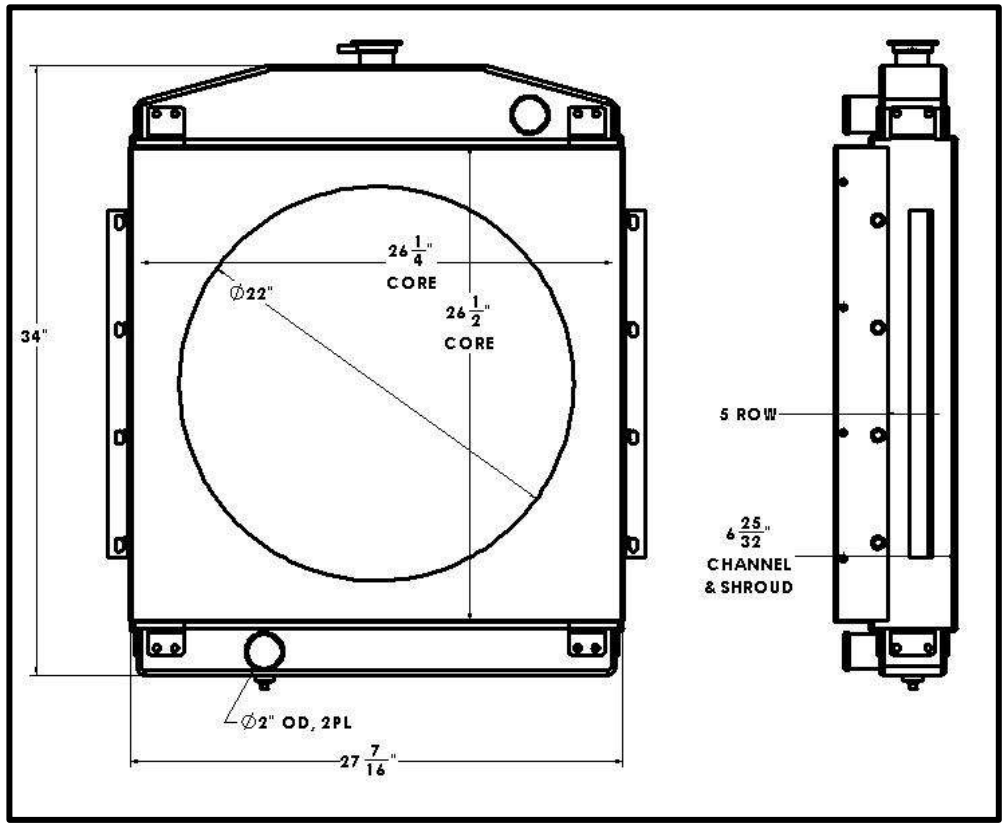

Overall Dimensions: 34” X 27-7/16” X 6-25/32”
Core: 26-1/2” X 26-1/4” X 5 ROW
Inlet: 2”OD
Outlet: 2”OD

Listed dimensions may vary slightly from OE

BGR Part Number: ST-0105-5I-NC
ONAN PART NUMBER: 130-2522, 22-4648

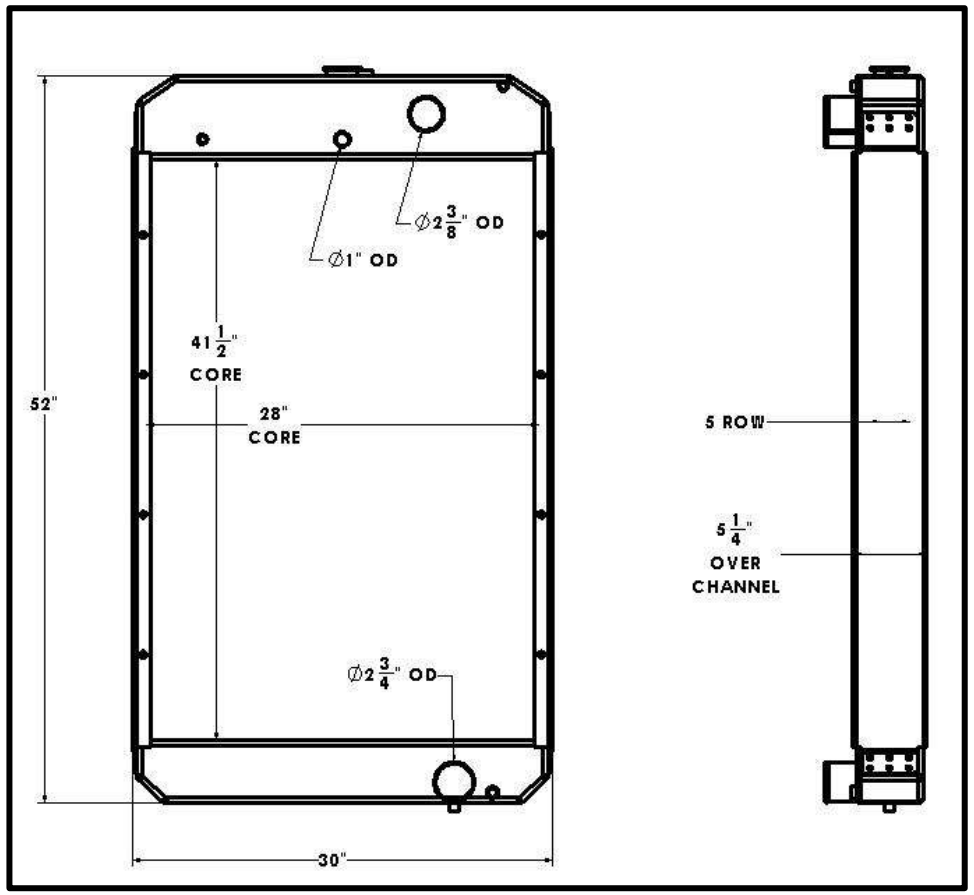

Overall Dimensions: 52” X 30” X 5-1/4”
Core: 41-1/2” X 28” X 5 ROW
Inlet: 2-3/8”OD
Outlet: 2-3/4”OD

Tel 1.800.774.2168
www.bgrradiator.com

BGR Part Number: ST-0106-5I-B
MODINE 10958, 030782,WHITE D3300T

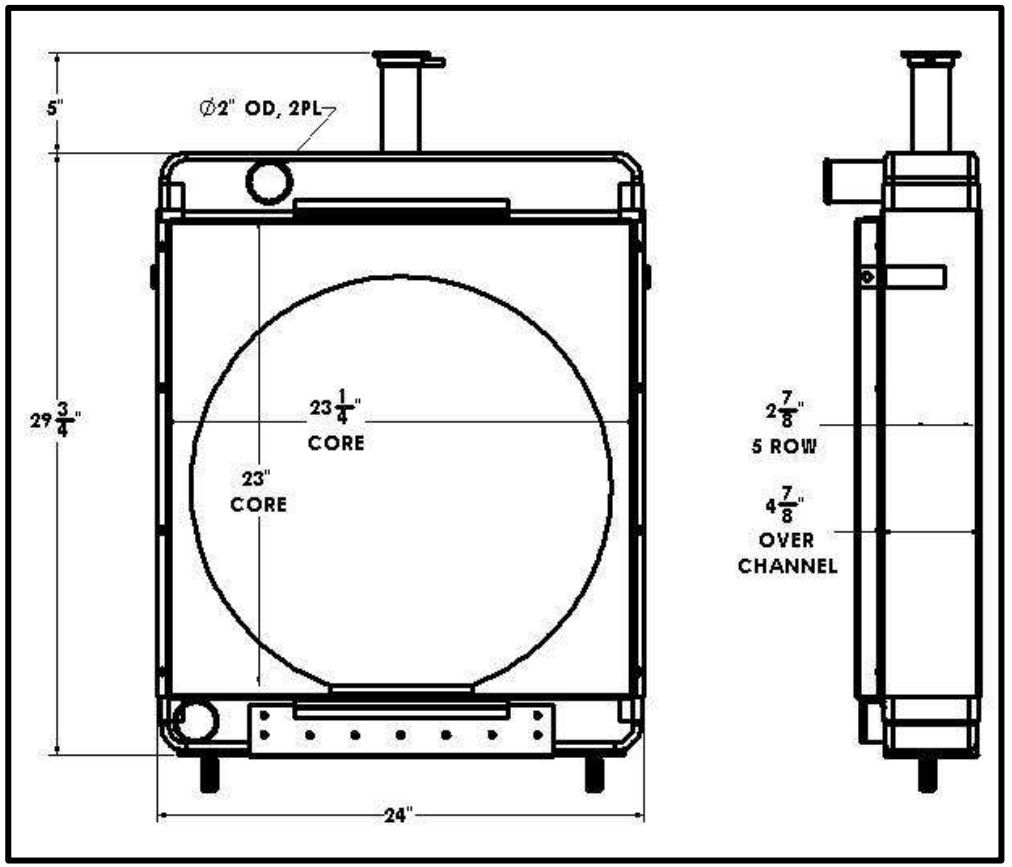

Overall Dimensions: 29-3/4” X 24” X 4-7/8”
Core: 23” X 23-1/4” X 5 ROW
Inlet: 2”OD
Outlet: 2”OD
NOTE: ST-0086-4R-B IS 4 ROW VERSION

Listed dimensions may vary slightly from OE

BGR Part Number: ST-0107-5T-EF
8036502 , 056,05c272,0020884000

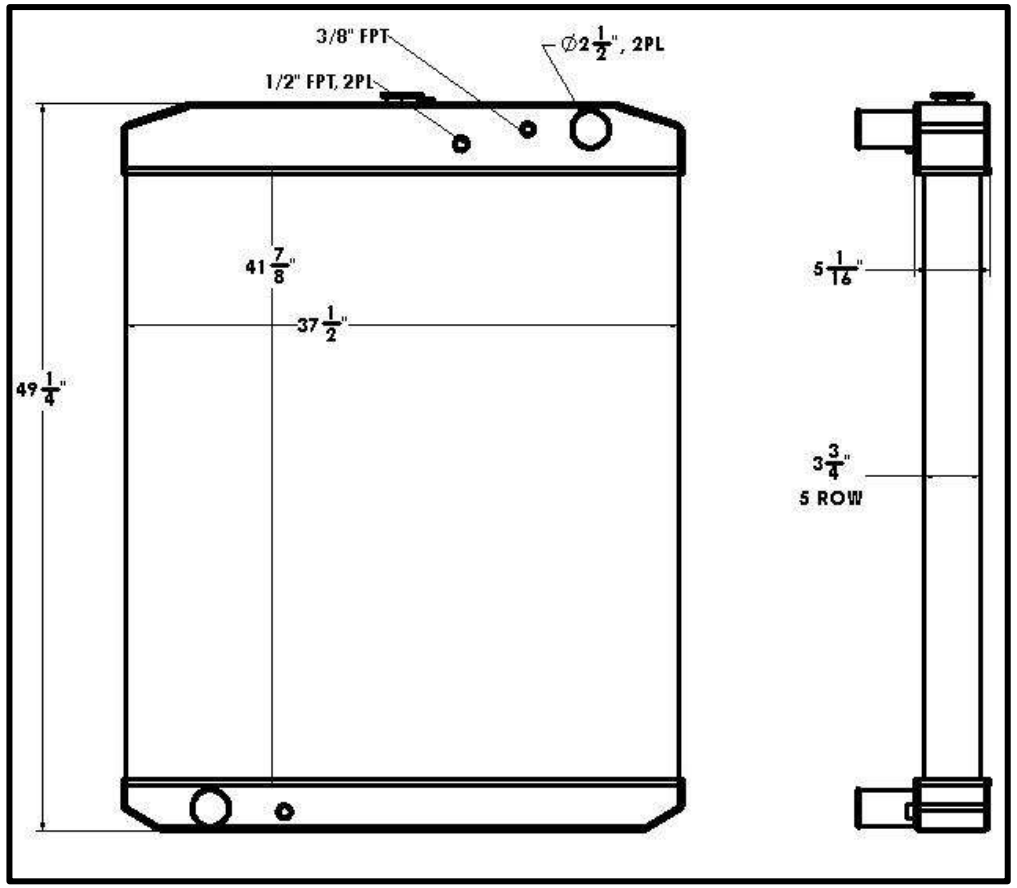

Overall Dimensions: 49-1/4” X 38” X 5-1/16”
Core: 41-7/8” X 37-1/2” X 5 ROW
Inlet: 2-1/2”OD
Outlet: 2-1/2”OD

Tel 1.800.774.2168
www.bgrradiator.com

BGR Part Number: ST-0108-5M-F
4-71 DETROIT

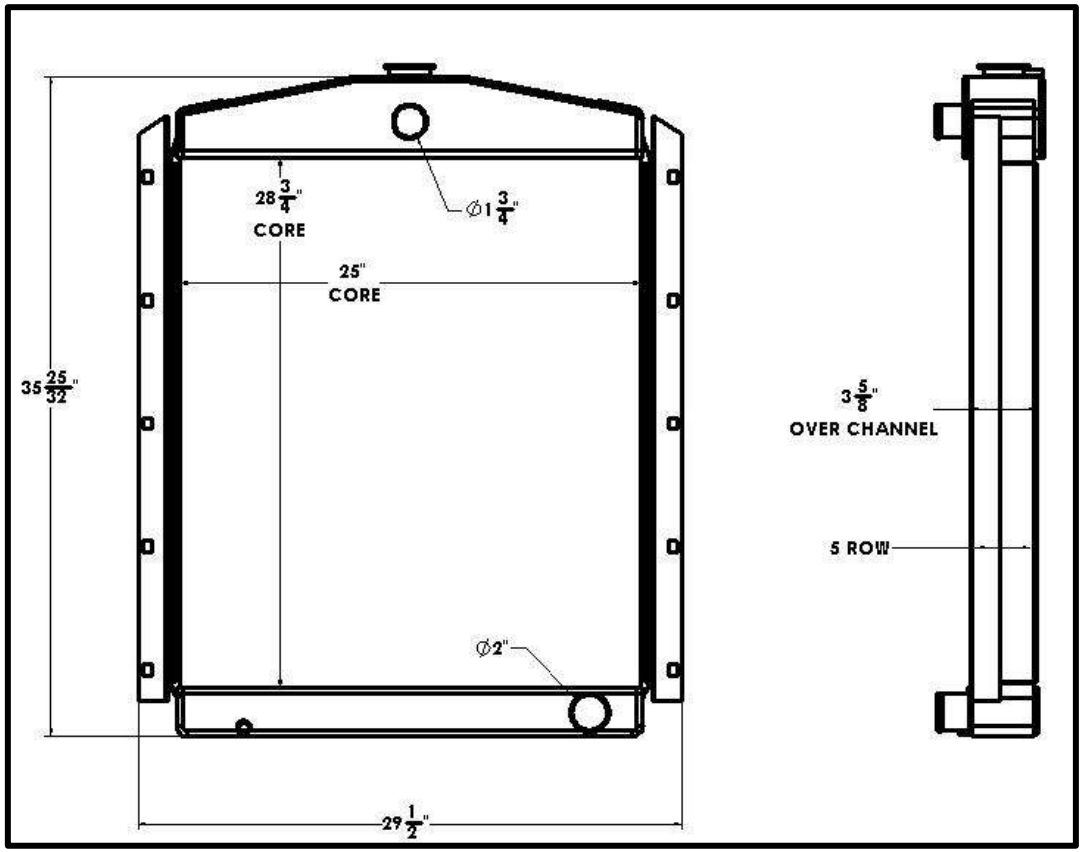

Overall Dimensions: 35-25/32” X 29-1/2” X 3-5/8”
Core: 28-3/4” X 25” X 5 ROW
Inlet: 1-3/4”OD
Outlet: 2”OD

Listed dimensions may vary slightly from OE

BGR Part Number: ST-0109-5I-F
ONAN PART NUMBER 130-4596-01 & 02

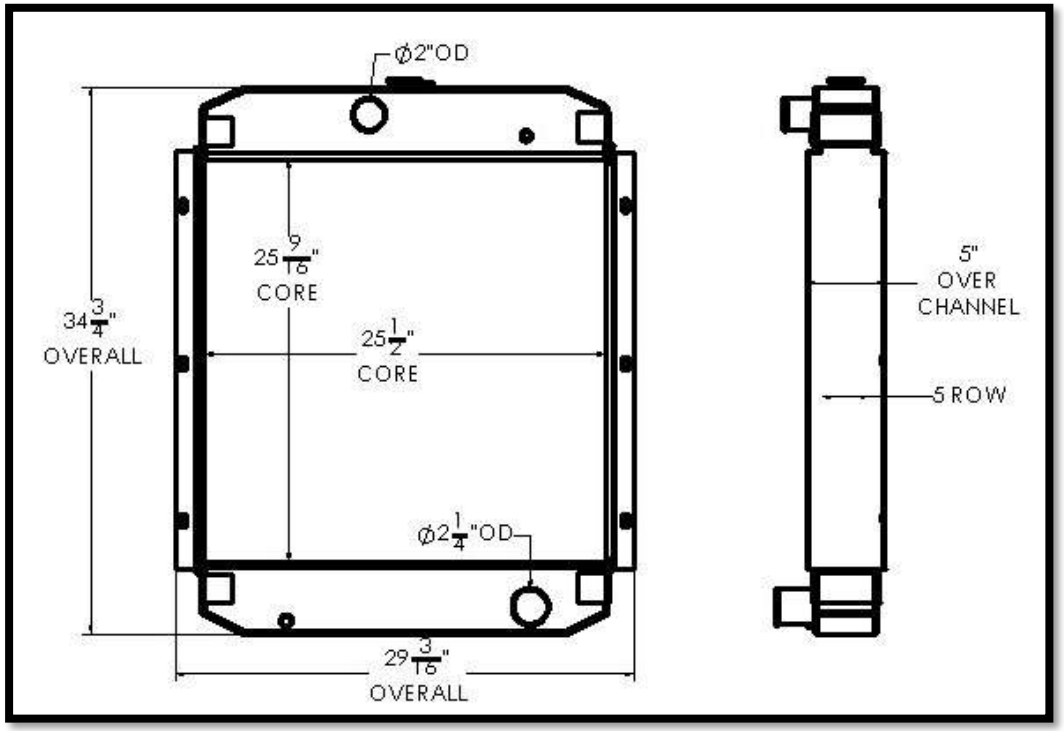

Overall Dimensions: 34-3/4” X 29-3/16” X 5”
Core: 25-9/16” X 25-1/2” X 5 ROW
Inlet: 2”OD
Outlet: 2-1/4”OD

Tel 1.800.774.2168
www.bgrradiator.com

BGR Part Number: ST-0110-5R-NC
KOHLER 80RZ282 SPEC 187334-82N

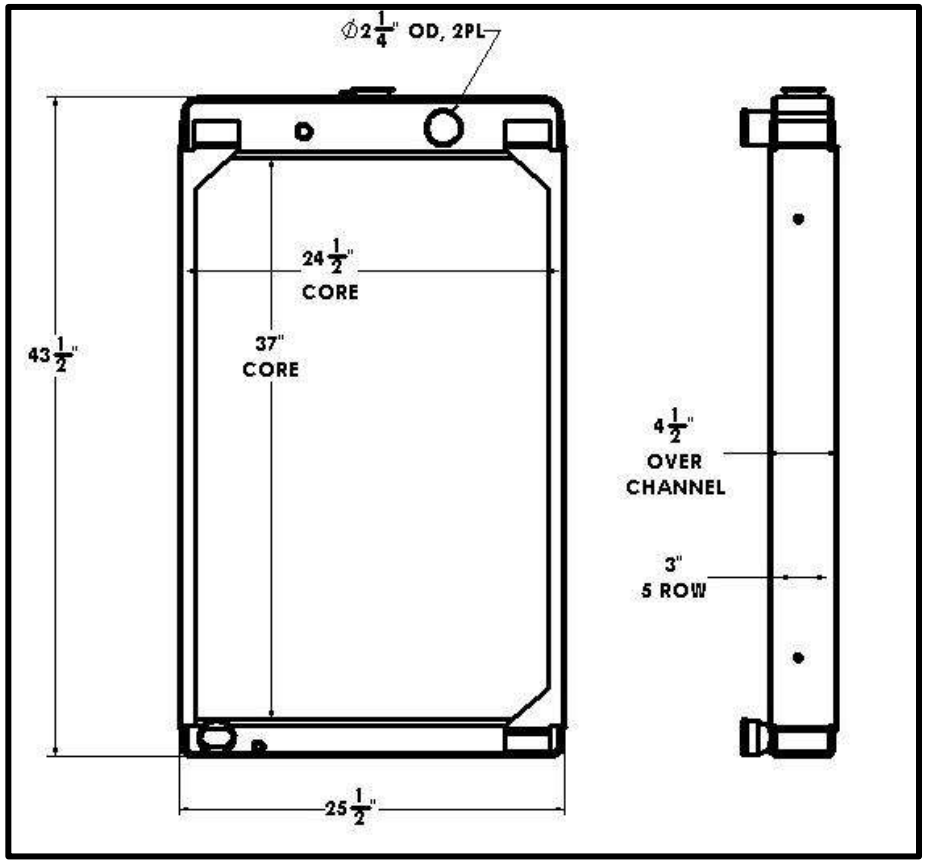

Overall Dimensions: 43-1/2” X 25-1/2” X 4-1/2”
Core: 37” X 24-1/2” X 5 ROW
Inlet: 2-1/4”OD
Outlet: 2-1/4”OD

Listed dimensions may vary slightly from OE

BGR Part Number: ST-0111-5R-F
GENERAC OG1933, 10000-39194

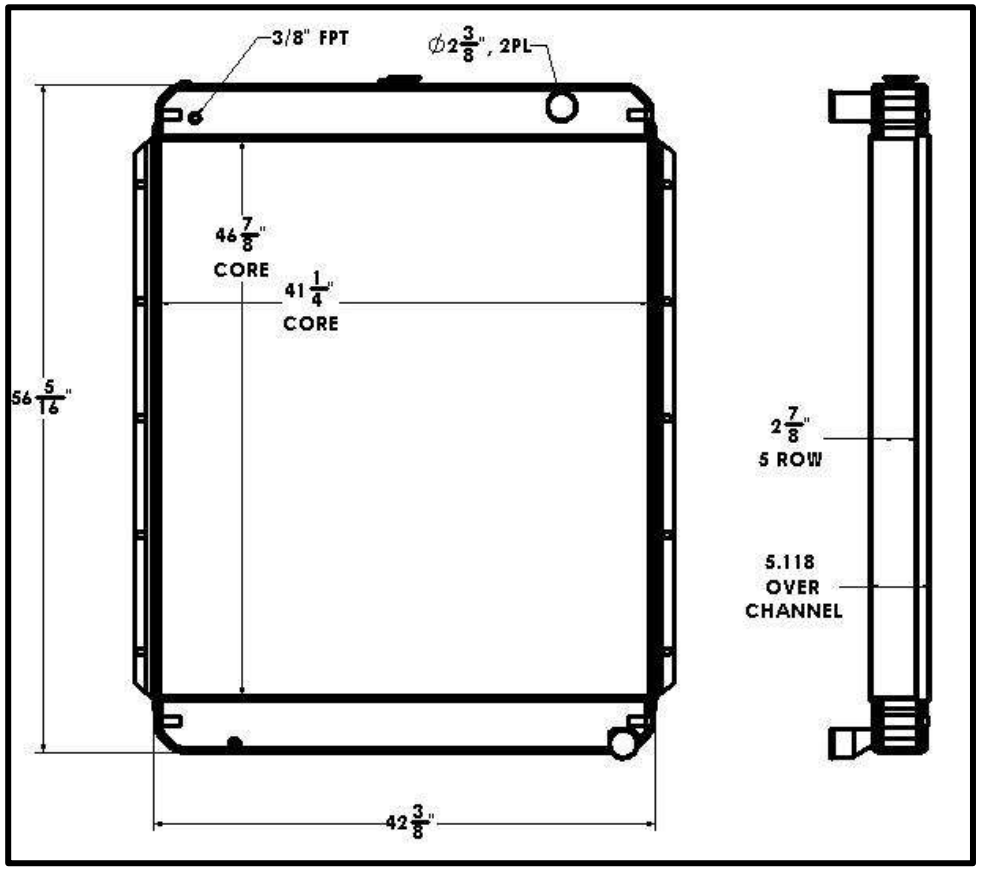

Overall Dimensions: 56-5/16” X 42-3/8” X 5-3/16”
Core: 46-7/8” X 41-1/4” X 5 ROW
Inlet: 2-3/8”OD
Outlet: 2-3/8”OD

Tel 1.800.774.2168
www.bgrradiator.com

BGR Part Number: ST-0112-3I-F
KOHLER 80RZ282 SPEC 187334-82N

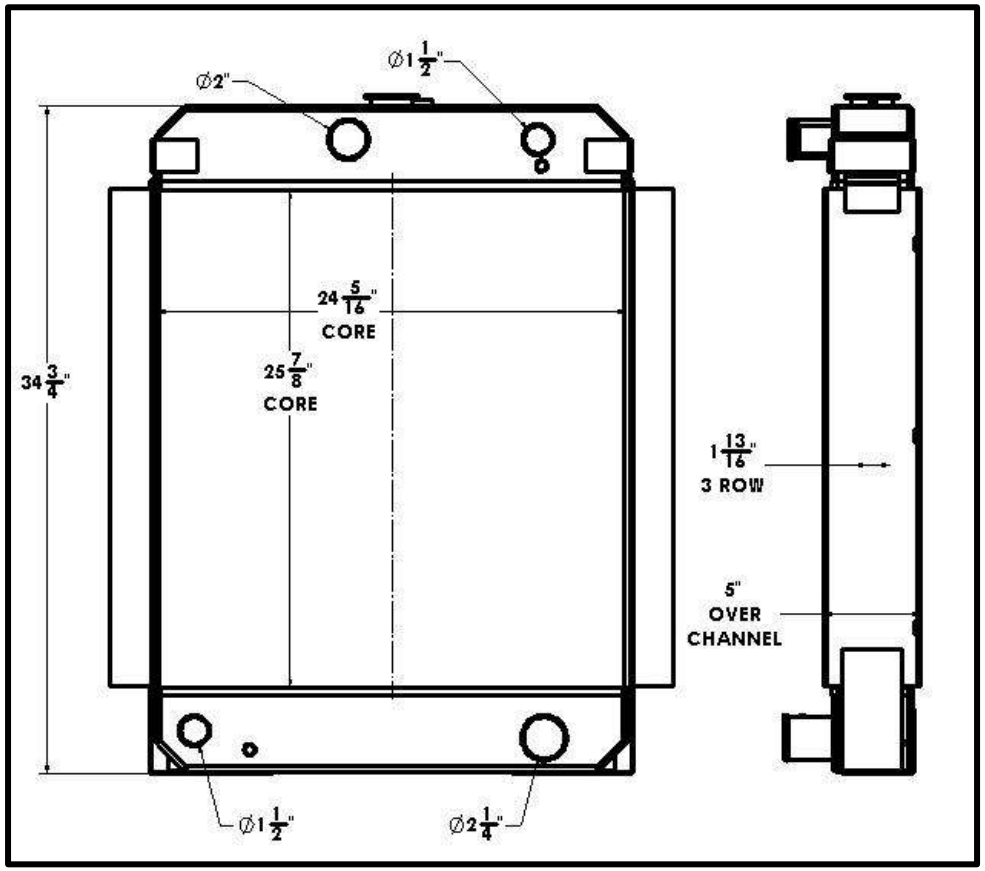

Overall Dimensions: 34-3/4” X 29-1/4” X 5”
Core: 25-7/8” X 24-5/16” X 3 ROW
Inlet: 2”OD, 1-1/2” OD
Outlet: 1-1/2” OD, 2-1/4”OD

Listed dimensions may vary slightly from OE

BGR Part Number: ST-0113-3X-NC
ONAN PART NUMBER 130-2517

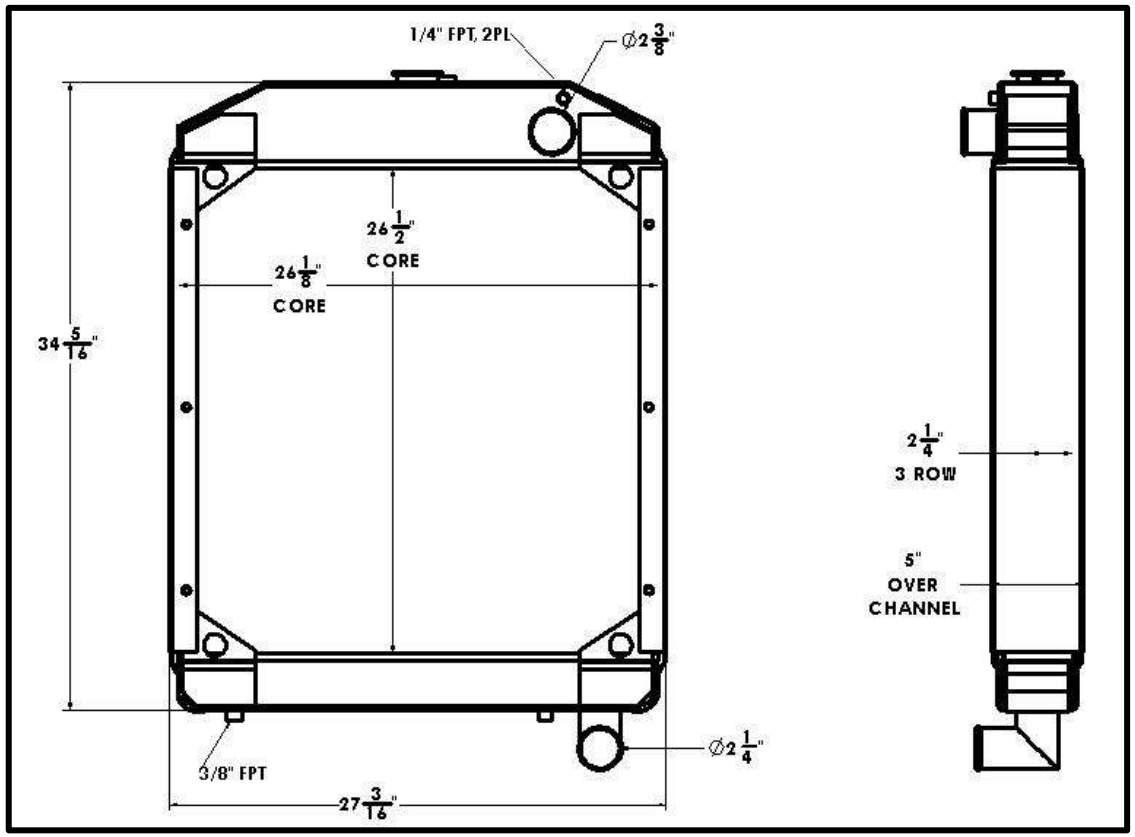

Overall Dimensions: 34-5/16” X 27-3/16” X 5”
Core: 26-1/2” X 26-1/8” X 3 ROW
Inlet: 2-3/8”OD
Outlet: 2-1/4”OD

Tel 1.800.774.2168
www.bgrradiator.com

BGR Part Number: ST-0114-5I-F
ONAN PART NUMBER 130-1161

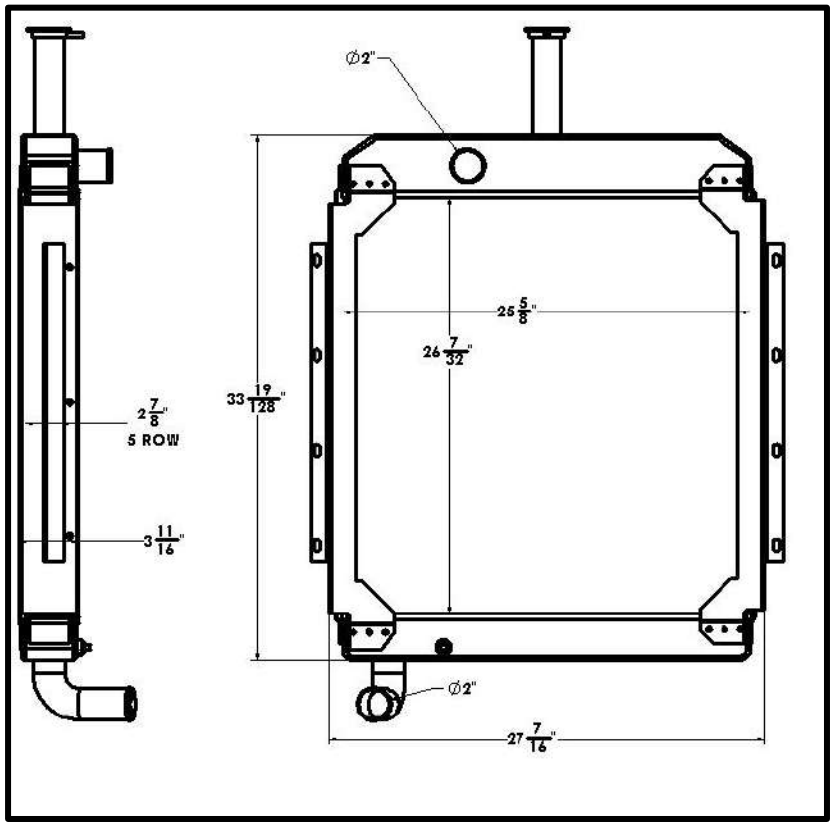

Overall Dimensions: 33-19/128” X 27-7/16” X 3-11/16”
Core: 26-7/32” X 25-5/8” X 5 ROW
Inlet: 2”OD
Outlet: 2” OD

Listed dimensions may vary slightly from OE

BGR Part Number: ST-0115-7R-NC
CUMMINS POWER PRODUCTS DR1245

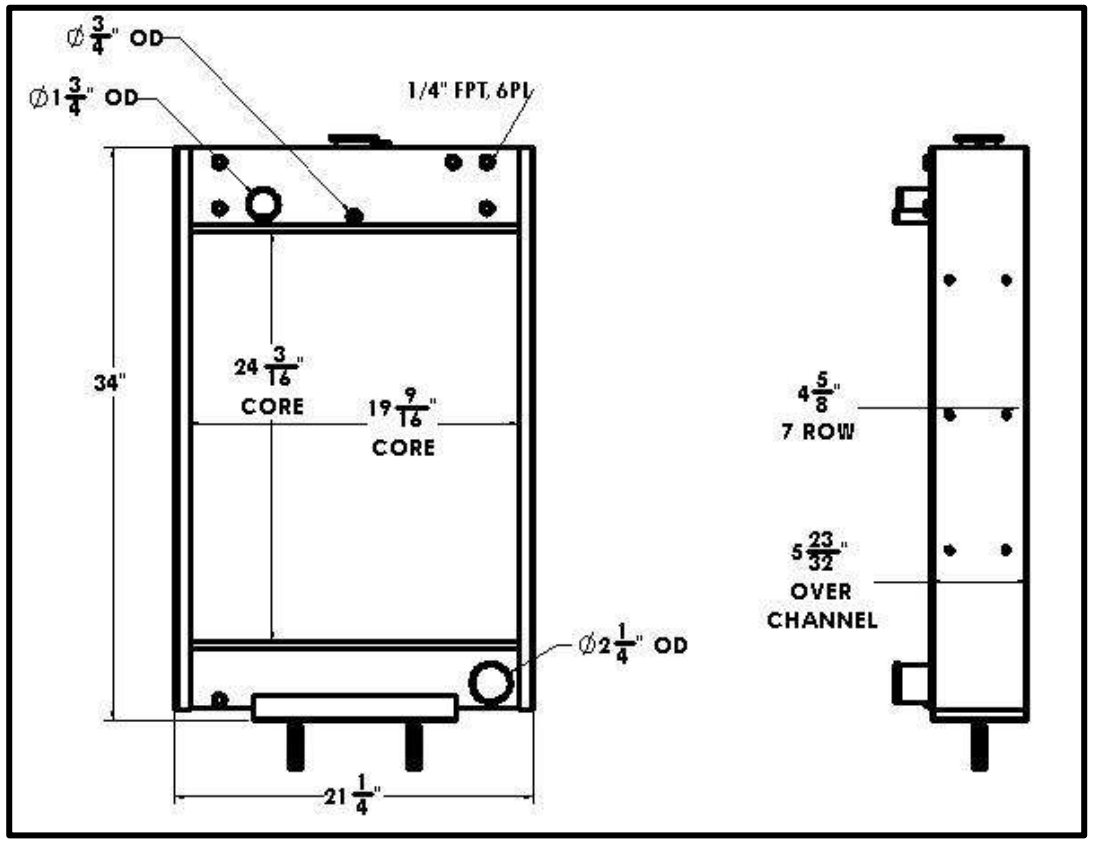

Overall Dimensions: 34” X 21-1/4” X 5-23/32”
Core: 24-3/16” X 19-9/16” X 7 ROW
Inlet: 1-3/4”OD
Outlet: 2-1/4”OD

Tel 1.800.774.2168
www.bgrradiator.com

BGR Part Number: ST-0116-5I-F
ONAN PART NUMBER 130-0430

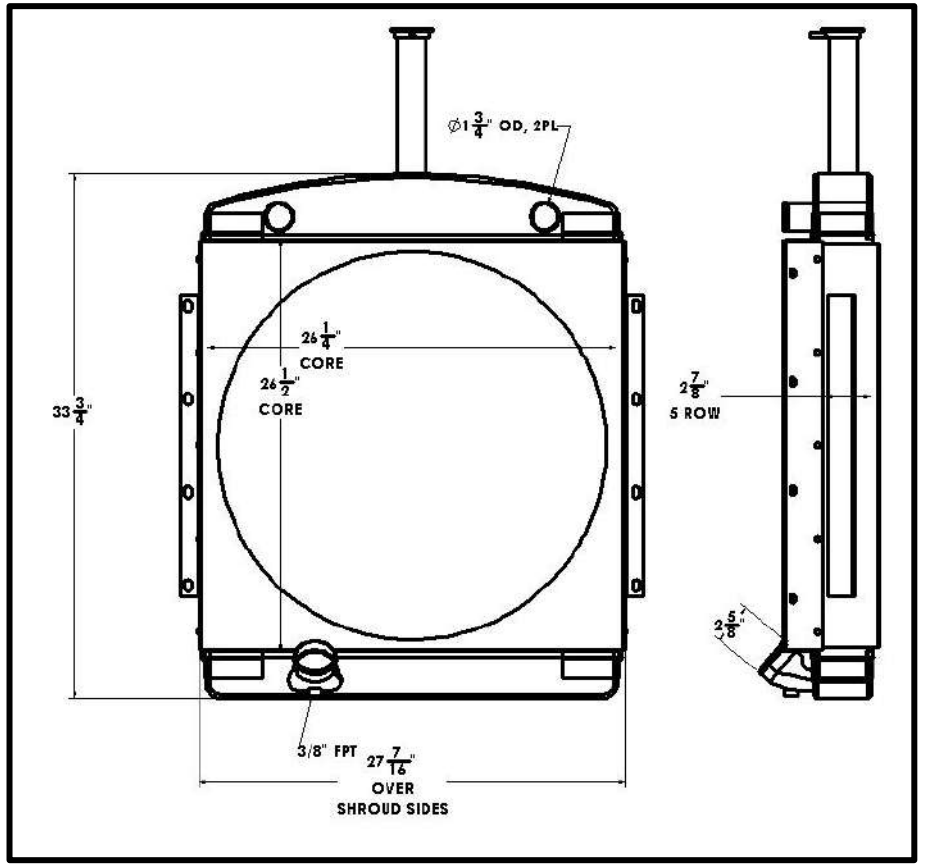

Overall Dimensions: 33-3/4” X 27-7/16”
Core: 26-1/2” X 26-1/4” X 5 ROW
Inlet: 1-34”OD 2PL
Outlet: 2-5/8” OD

Listed dimensions may vary slightly from OE

BGR Part Number: ST-0117-7I-NC
1A15308, ONAN 130-2982

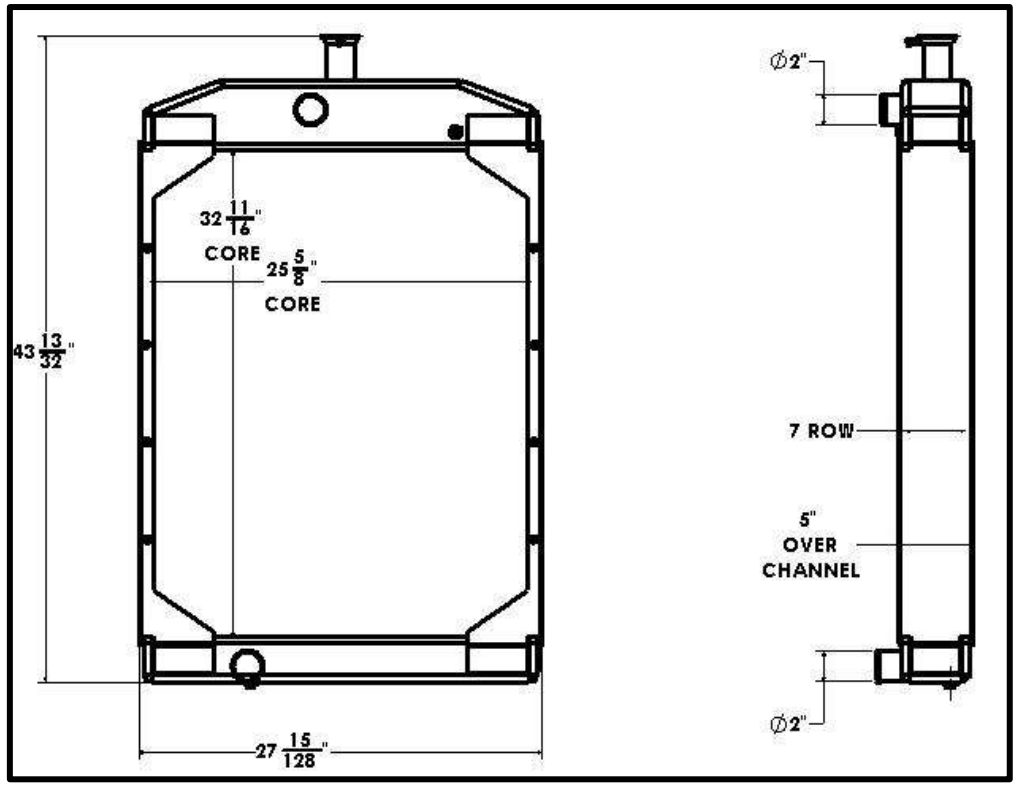

Overall Dimensions: 43-13/32” X 27-15/128” X 5”
Core: 32-11/16” X 25-5/8” X 7 ROW
Inlet: 2”OD
Outlet: 2”OD

Tel 1.800.774.2168
www.bgrradiator.com

BGR Part Number: ST-0118-4T-NC
KATOLIGHT

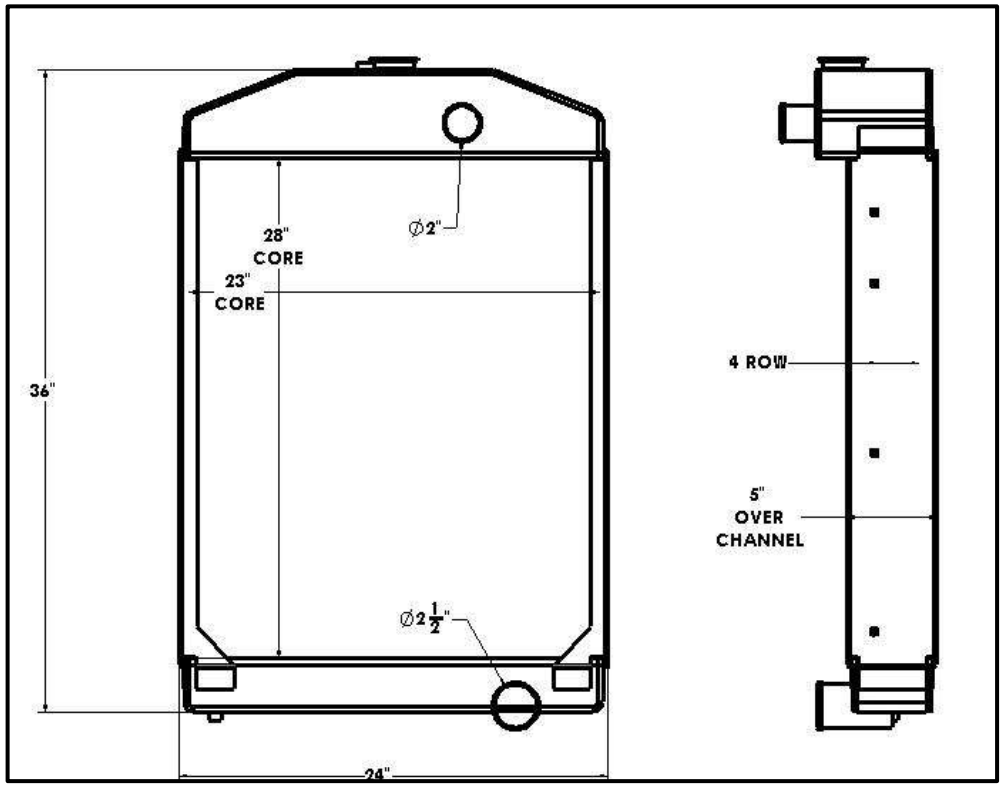

Overall Dimensions: 36” X 24” X 5”
Core: 28” X 23” X 4 ROW
Inlet: 2”OD 2PL
Outlet: 2-1/2” OD

Listed dimensions may vary slightly from OE

BGR Part Number: ST-0119-4T-NC
D333

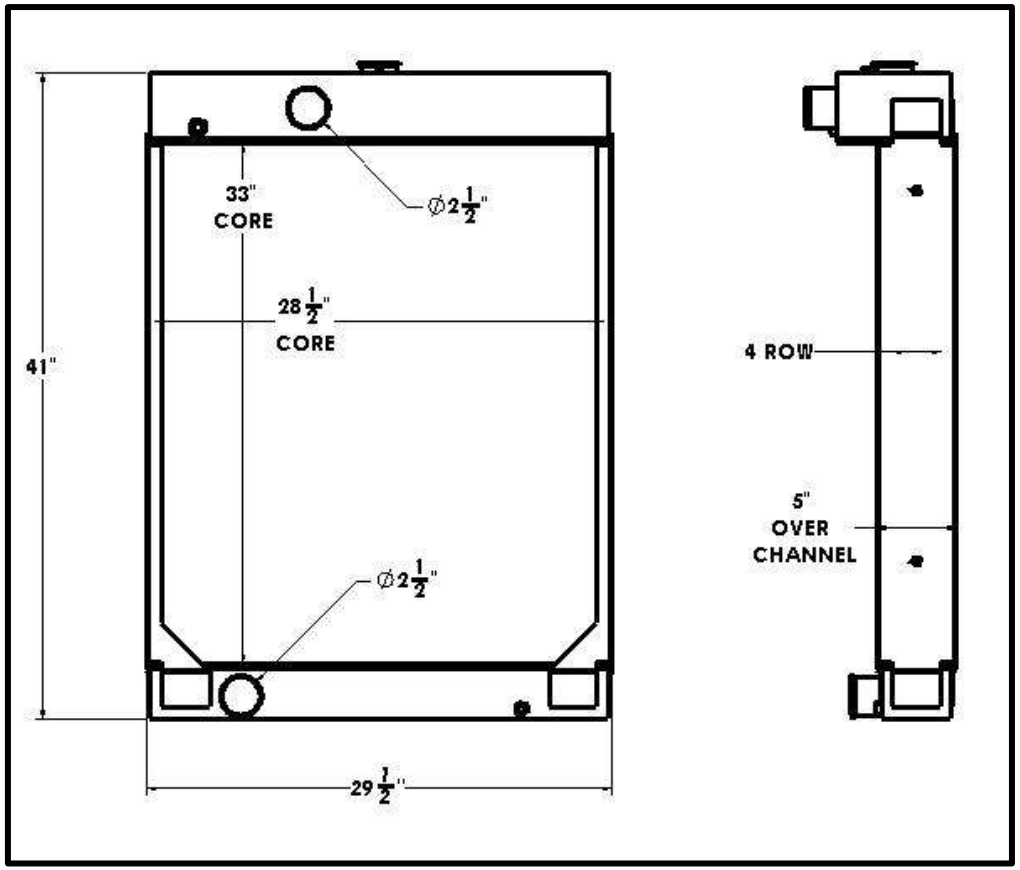

Overall Dimensions: 41” X 29-1/2” X 5”
Core: 33” X 28-1/2” X 4 ROW
Inlet: 2-1/2”OD
Outlet: 2-1/2”OD

Tel 1.800.774.2168
www.bgrradiator.com

BGR Part Number: ST-0120-5M-NC
RS-7276R

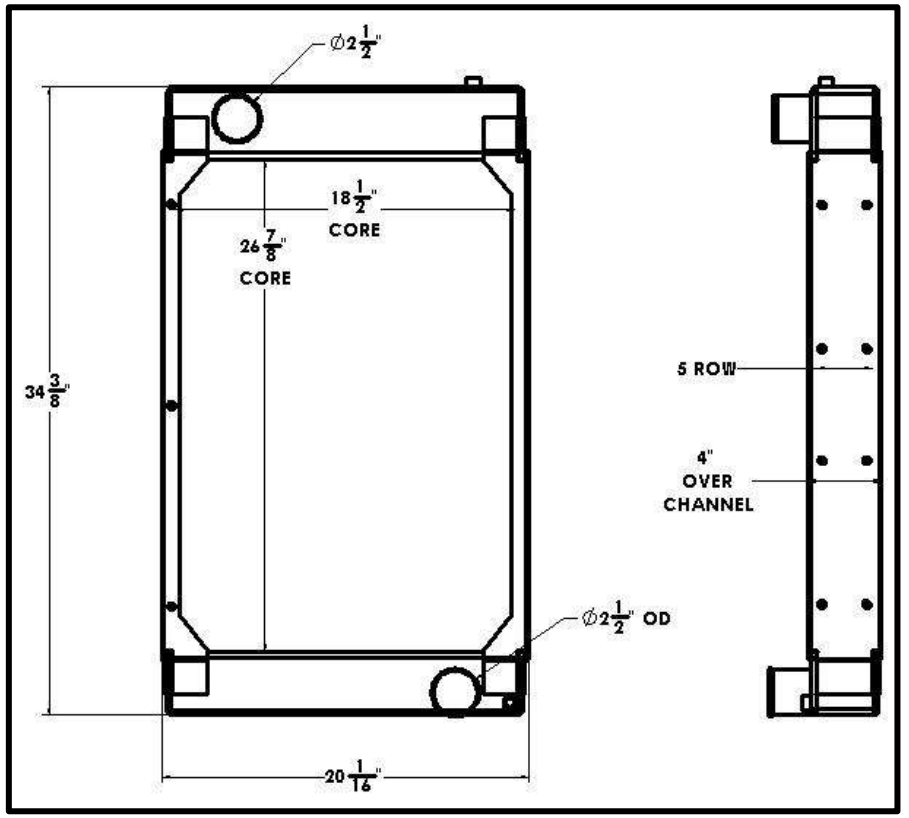

Overall Dimensions: 34-3/8” X 20-1/16” X 4”
Core: 26-7/8” X 18-1/2” X 5 ROW
Inlet: 2-1/2”OD
Outlet: 2-1/2” OD
NOTE: COPPER/BRASS VERSION OF OE

Listed dimensions may vary slightly from OE

BGR Part Number: ST-0121-5I-NC
KOHLER 50 RZ62, SPEC 187137-62L

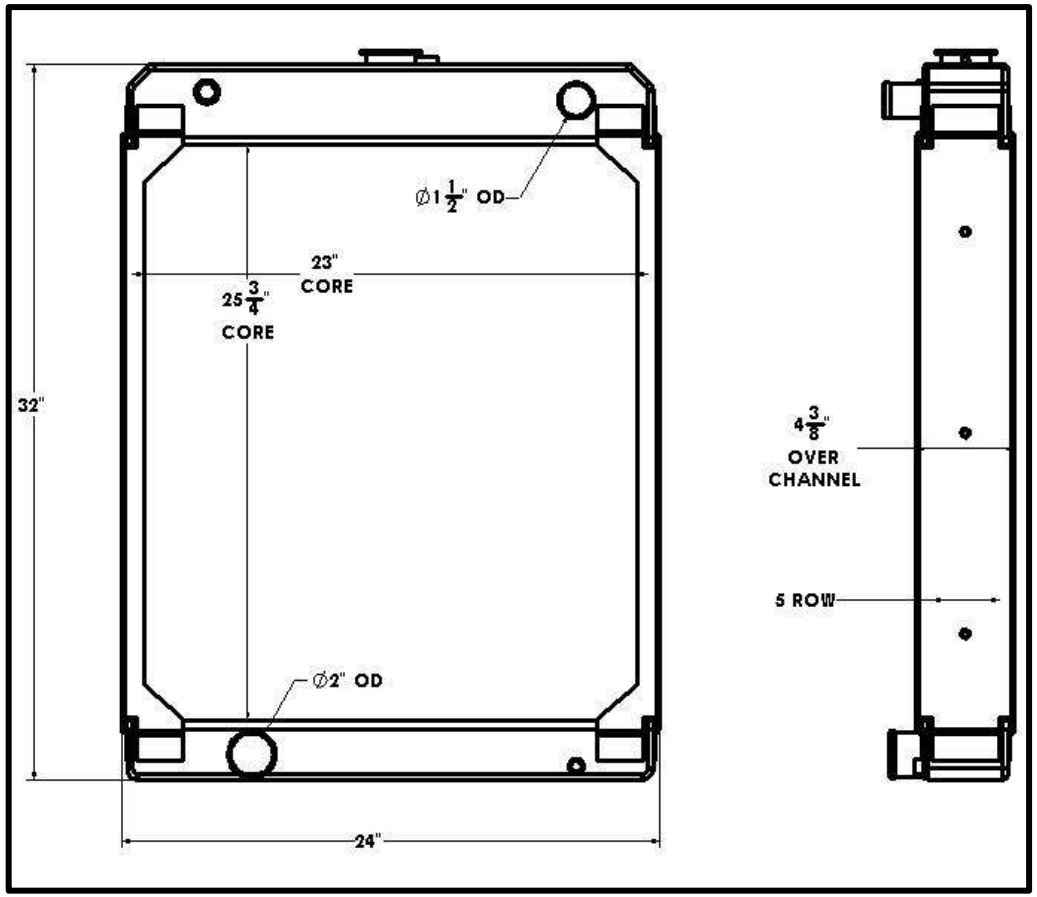

Overall Dimensions: 32” X 24” X 4-3/8”
Core: 25-3/4” X 23” X 5 ROW
Inlet: 1-1/2”OD
Outlet: 2”OD

Tel 1.800.774.2168
www.bgrradiator.com

BGR Part Number: ST-0122-5I-NC
CATERPILLAR SN-2913-09, B3341L0

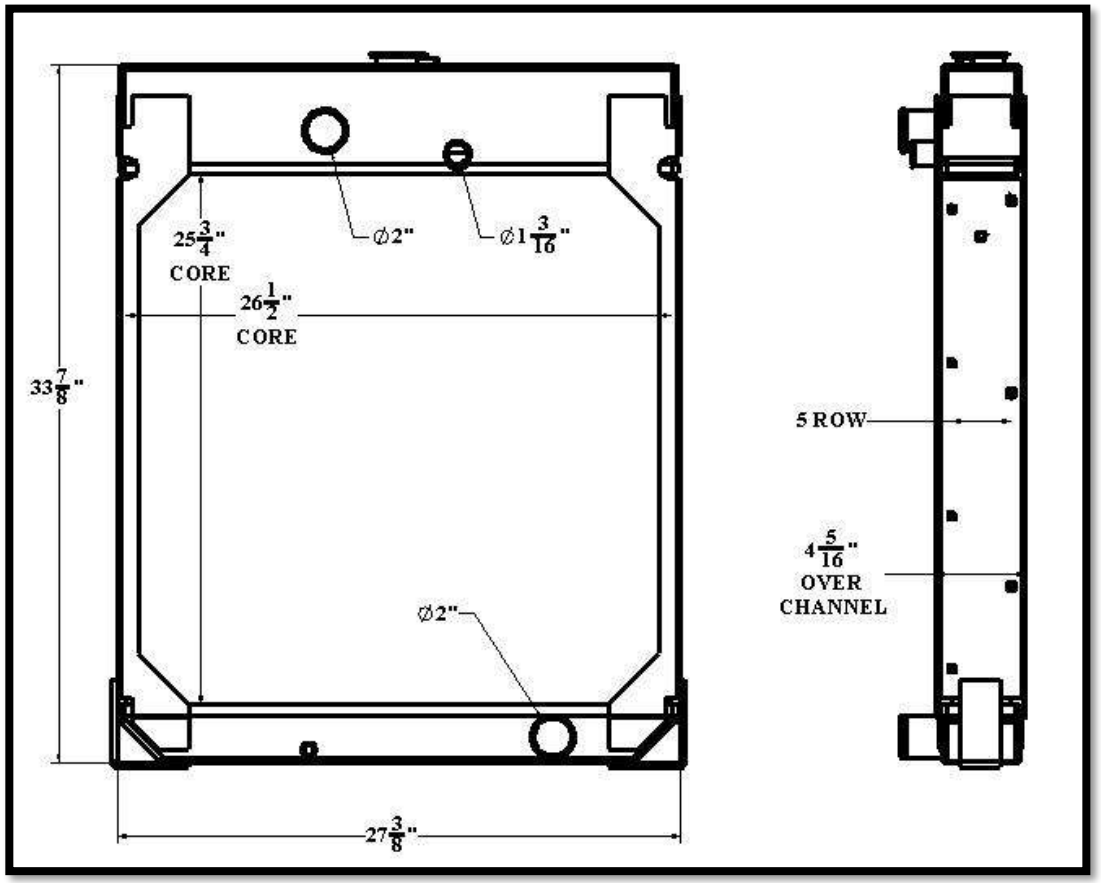

Overall Dimensions: 33-7/8” X 27-3/8” X 4-5/16”
Core: 25-3/4” X 26-1/2” X 5 ROW
Inlet: 2”OD
Outlet: 2” OD

Listed dimensions may vary slightly from OE

BGR Part Number: ST-0123-4T-NC
Modine 1A17682 A-3433177

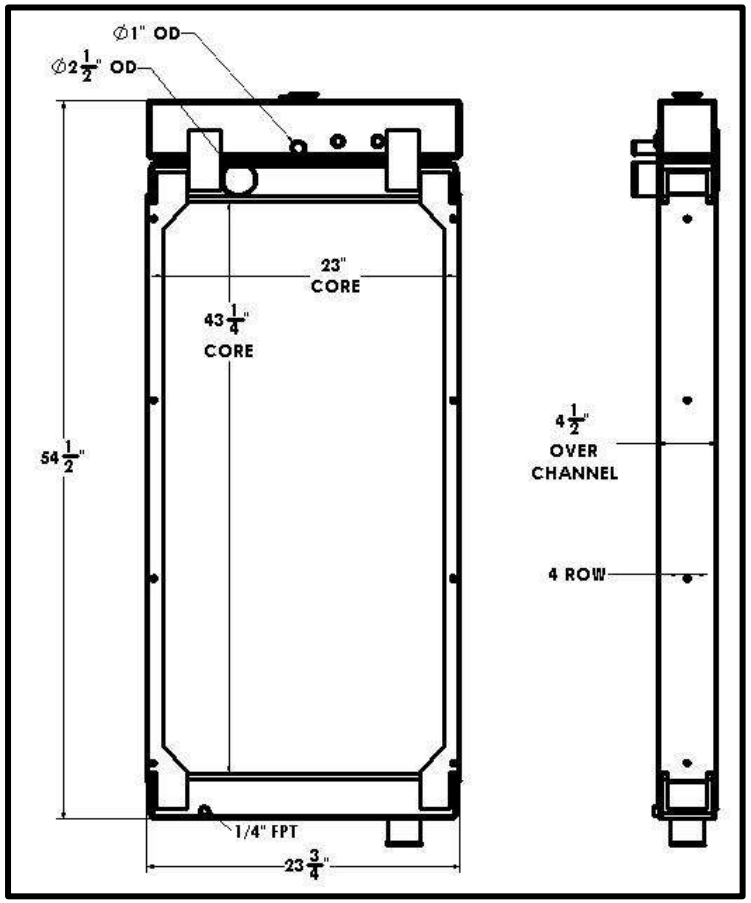

Overall Dimensions: 54-1/2” X 23-3/4” X 4-1/2”
Core: 43-1/4” X 23” X 4 ROW
Inlet: 2-1/2”OD
Outlet: 2-1/2”OD

Tel 1.800.774.2168
www.bgrradiator.com

BGR Part Number: ST-0124-3R-F
ONAN PART NUMBER 130-4691-01

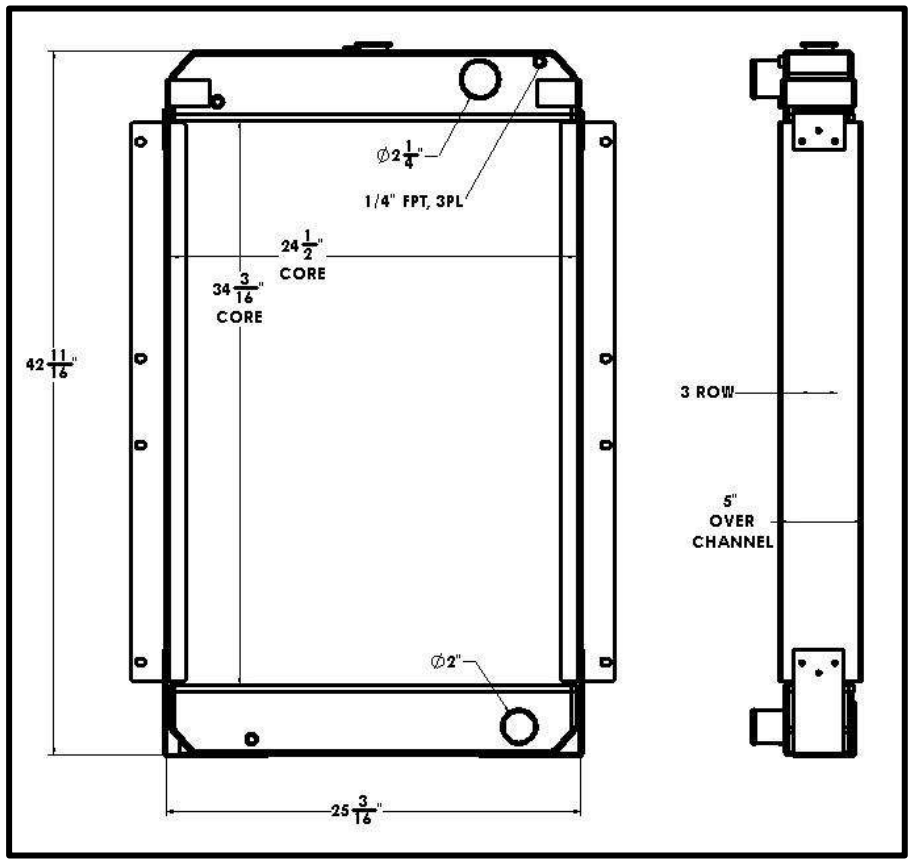

Overall Dimensions: 42-11/16” X 25-3/16” X 5”
Core: 34-3/16” X 24-1/2” X 3 ROW
Inlet: 2-1/4”OD
Outlet: 2” OD

Listed dimensions may vary slightly from OE

BGR Part Number: ST-0125-4R-F
ONAN PART NUMBER 130-4691-02

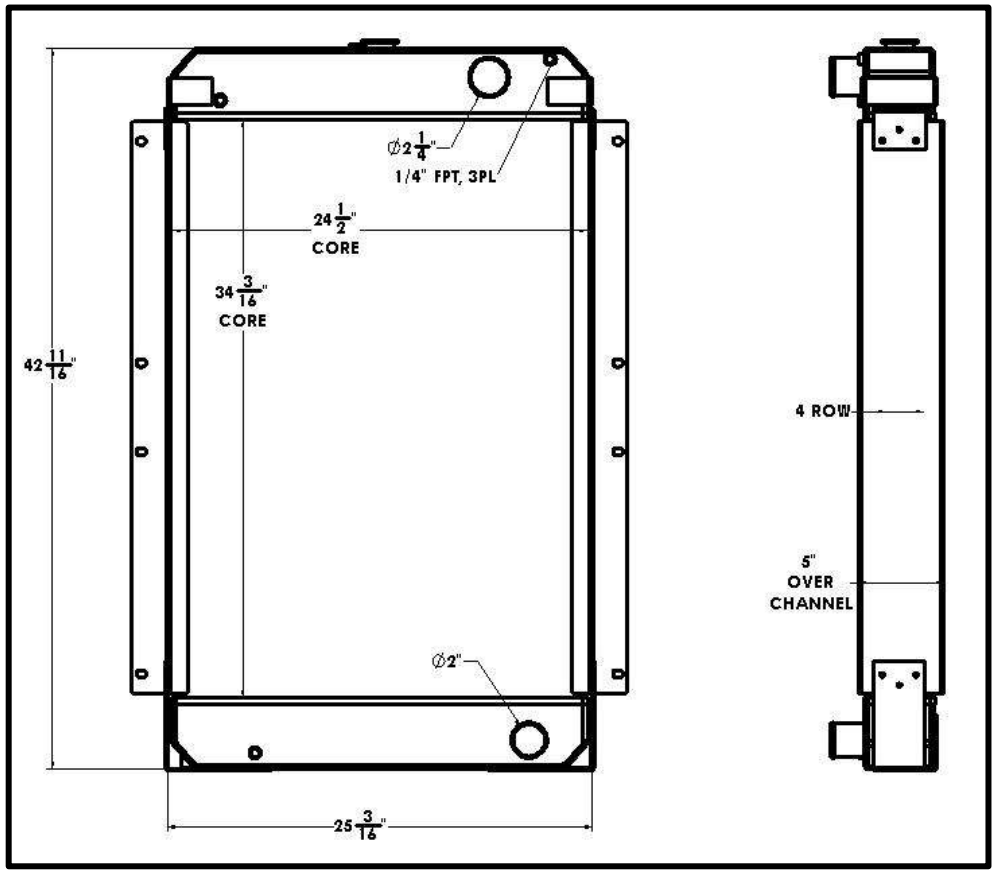

Overall Dimensions: 42-11/16” X 25-3/16” X 5”
Core: 34-3/16” X 24-1/2” X 4 ROW
Inlet: 2-1/4”OD
Outlet: 2”OD

Tel 1.800.774.2168
www.bgrradiator.com

BGR Part Number: ST-0126-3M-EF
Perkins PA 66 GI 30, 2485B267

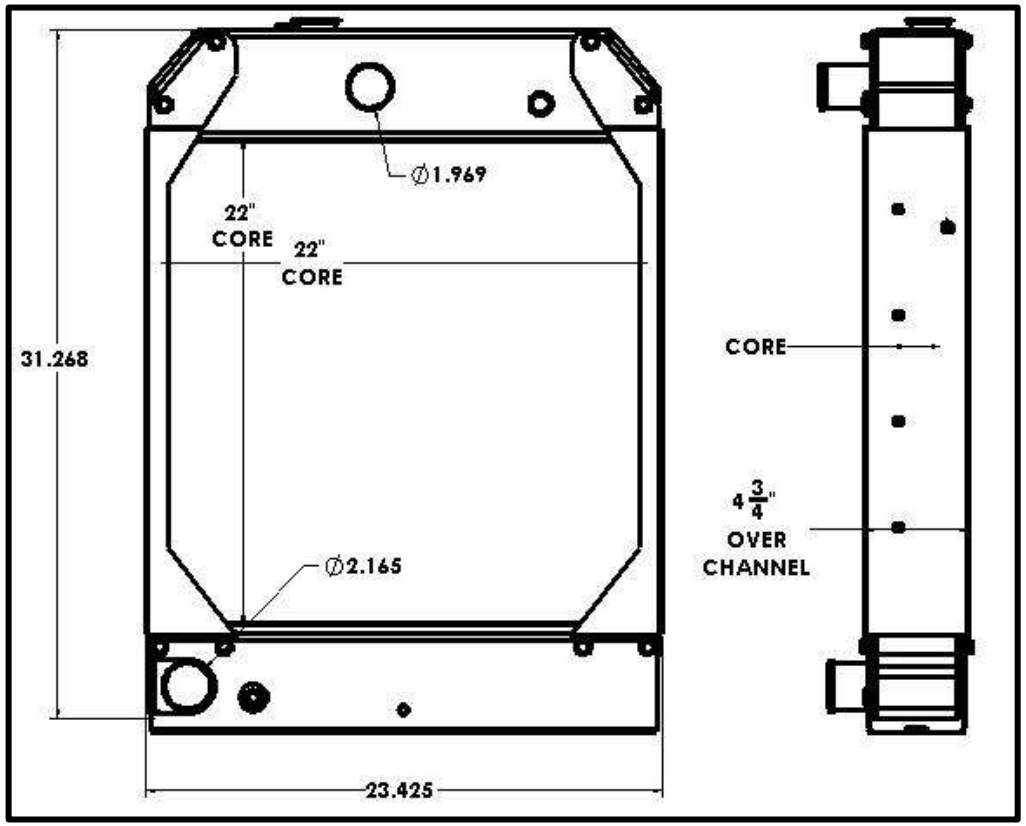

Overall Dimensions: 31-1/4” X 23-7/16” X 4-3/4”
Core: 22” X 22” X 4 ROW
Inlet: 1-15/16”OD
Outlet: 2-3/16”OD

Listed dimensions may vary slightly from OE

BGR Part Number: ST-0127-5M-NC
1277G08 IHT

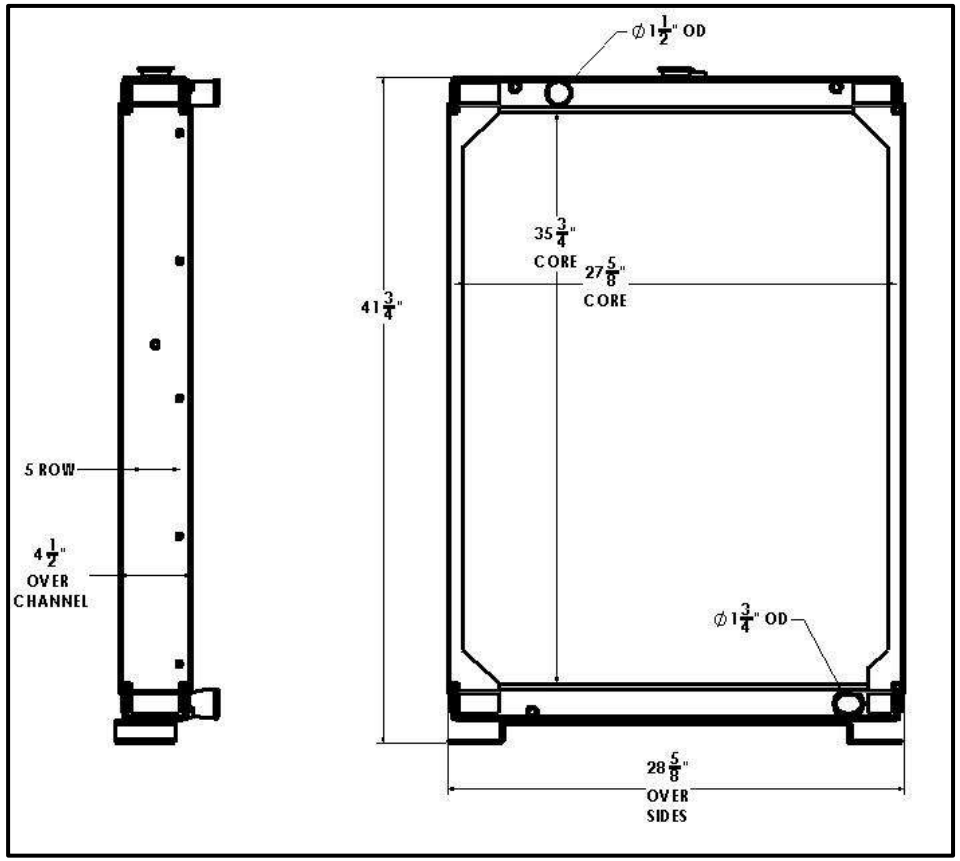

Overall Dimensions: 41-3/4” X 28-5/8” X 4-1/2”
Core: 35-3/4” X 27-5/8” X 5 ROW
Inlet: 1-1/2”OD
Outlet: 1-3/4”OD

Tel 1.800.774.2168
www.bgrradiator.com

BGR Part Number: ST-0128-2T-EF
Generac 097372C

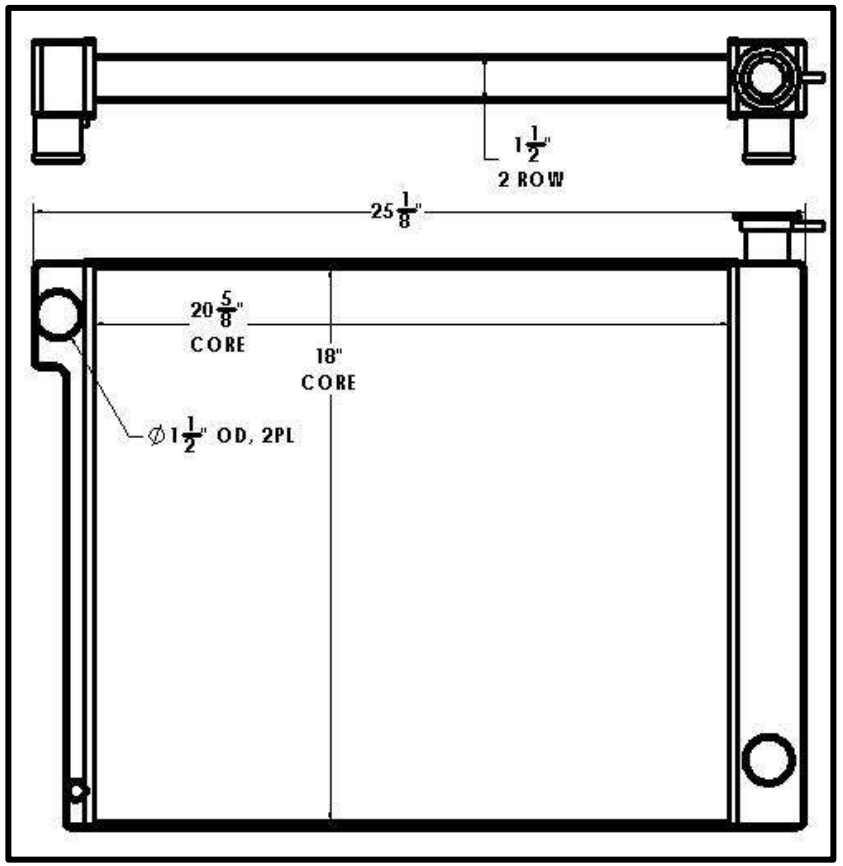

Overall Dimensions: 25-1/8” X 19” X 2-1/2”
Core: 20-5/8” X 18” X 2 ROW
Inlet: 1-1/2”OD
Outlet: 1-1/2”OD

Listed dimensions may vary slightly from OE

BGR Part Number: ST-0129-4T-NC
A-352191, 1A17556

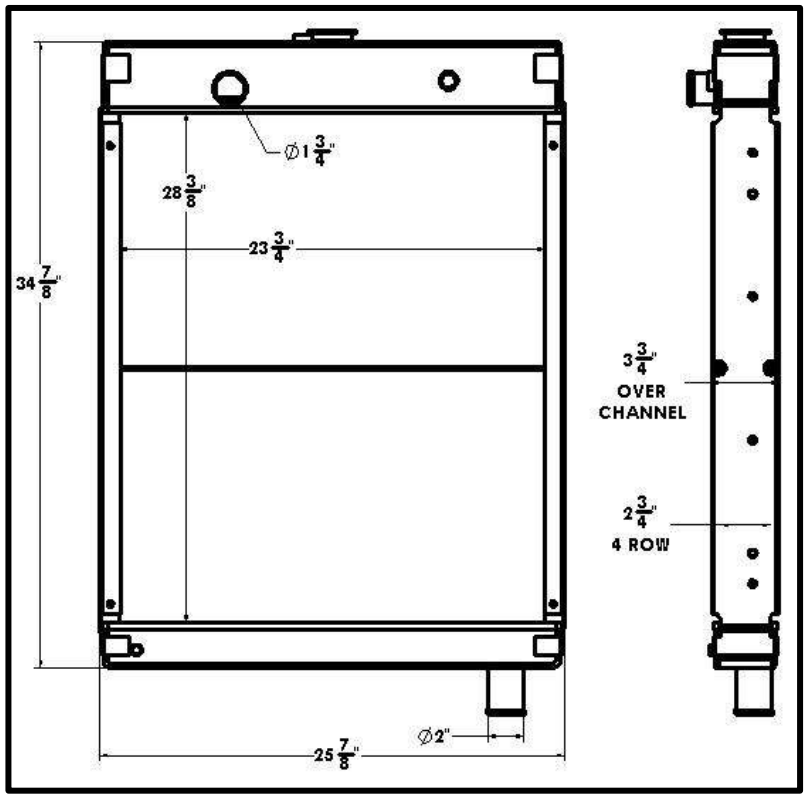

Overall Dimensions: 34-7/8” X 25-7/8” X 3-3/4”
Core: 28-3/8” X 23-3/4” X 4 ROW
Inlet: 1-3/4”OD
Outlet: 2”OD

Tel 1.800.774.2168
www.bgrradiator.com

BGR Part Number: ST-0130-5I-NC
ONAN PART NUMBER 130-2431,1A11934

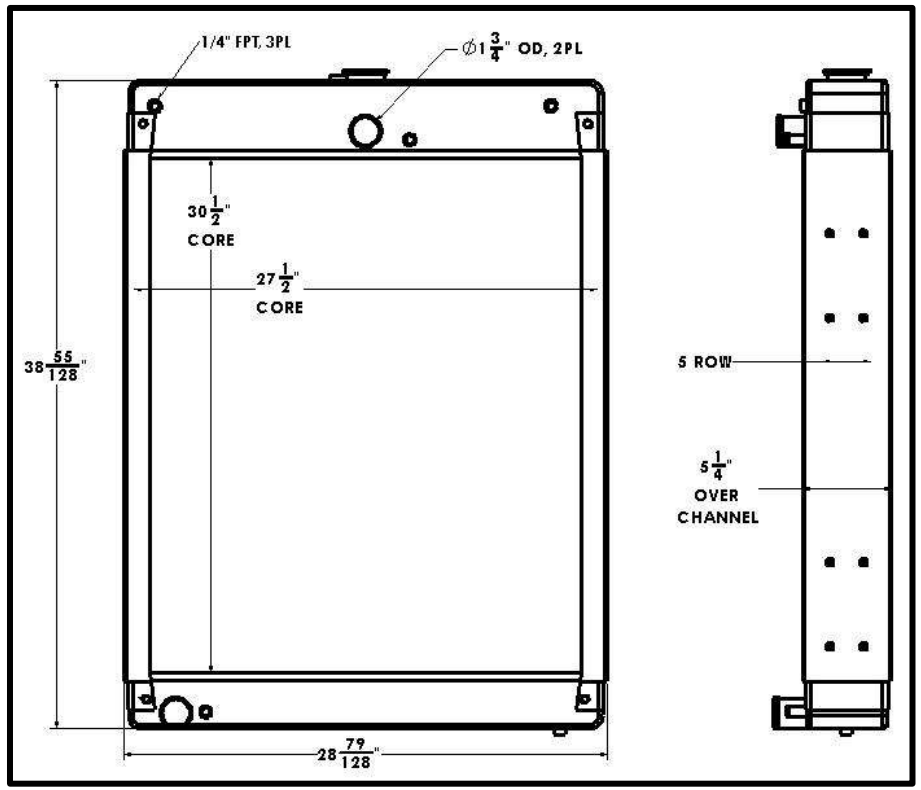

Overall Dimensions: 38-55/128” X 28-79/128” X 5-1/4”
Core: 30-1/2” X 27-1/2” X 5 ROW
Inlet: 1-3/4”OD
Outlet: 1-3/4”OD

Listed dimensions may vary slightly from OE

BGR Part Number: ST-0131-5M-EF
ONAN PART NUMBER 130-7161, 130-6930, 130-6815

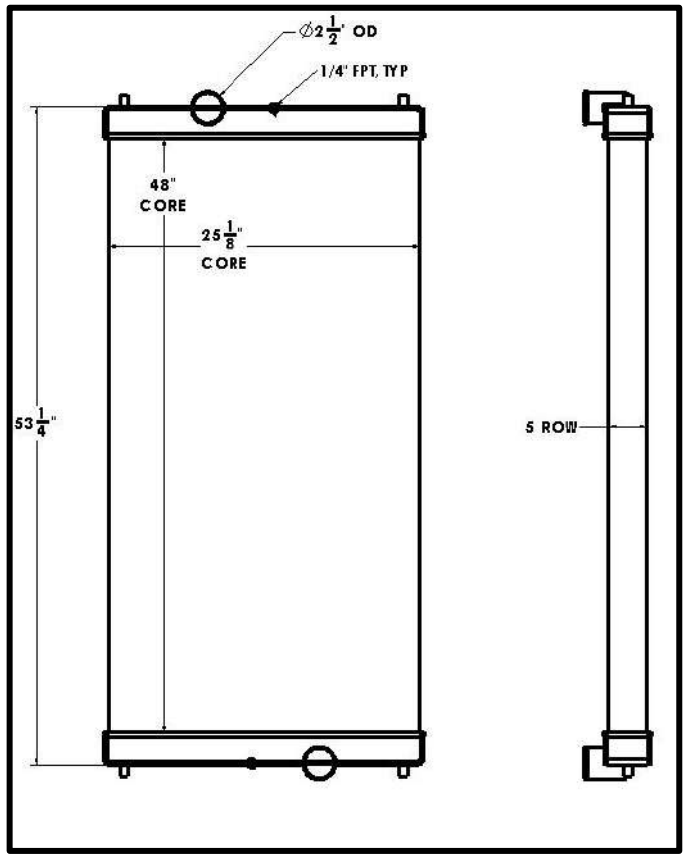

Overall Dimensions: 53-1/4” X 25-1/2” X 3-1/2”
Core: 48” X 25-1/8” X 5 ROW
Inlet: 2-1/2”OD
Outlet: 2-1/2”OD

Tel 1.800.774.2168
www.bgrradiator.com

BGR Part Number: ST-0132-4I-EF
VOLVO, 230050694, Kohler # GM27950

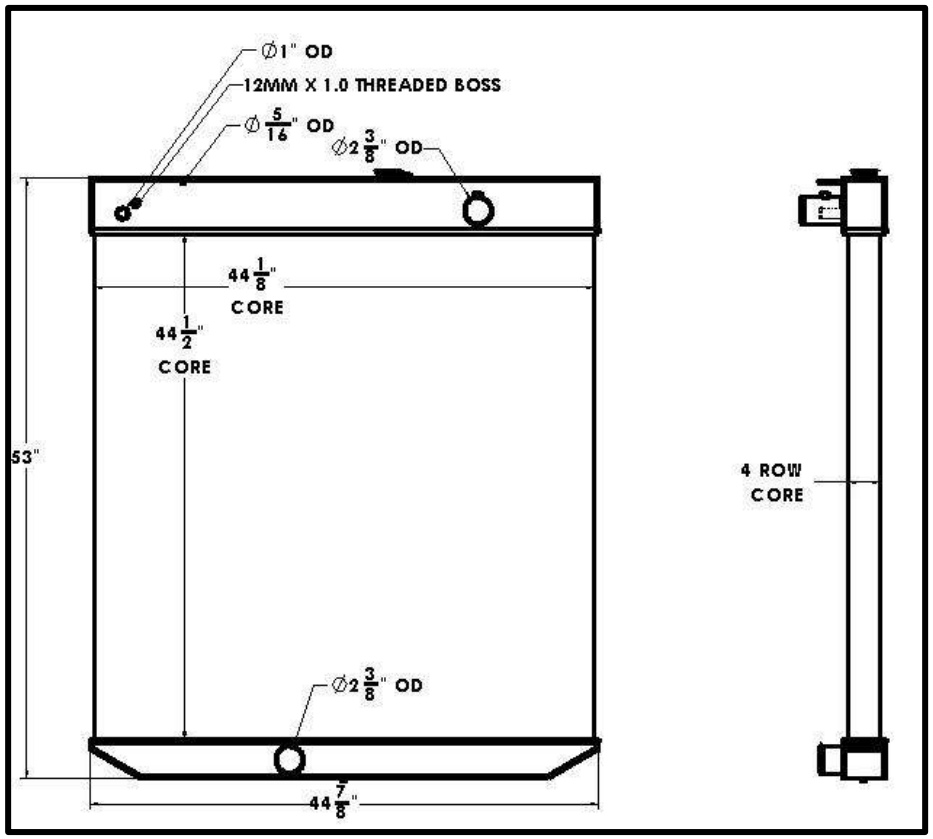

Overall Dimensions: 53” X 45” X 3-1/2”
Core: 44-1/2” X 44-1/8” X 4 ROW
Inlet: 2-3/8”OD
Outlet: 2-3/8”OD

Listed dimensions may vary slightly from OE

BGR Part Number: ST-0133-5M-TT
DMT 100 KW

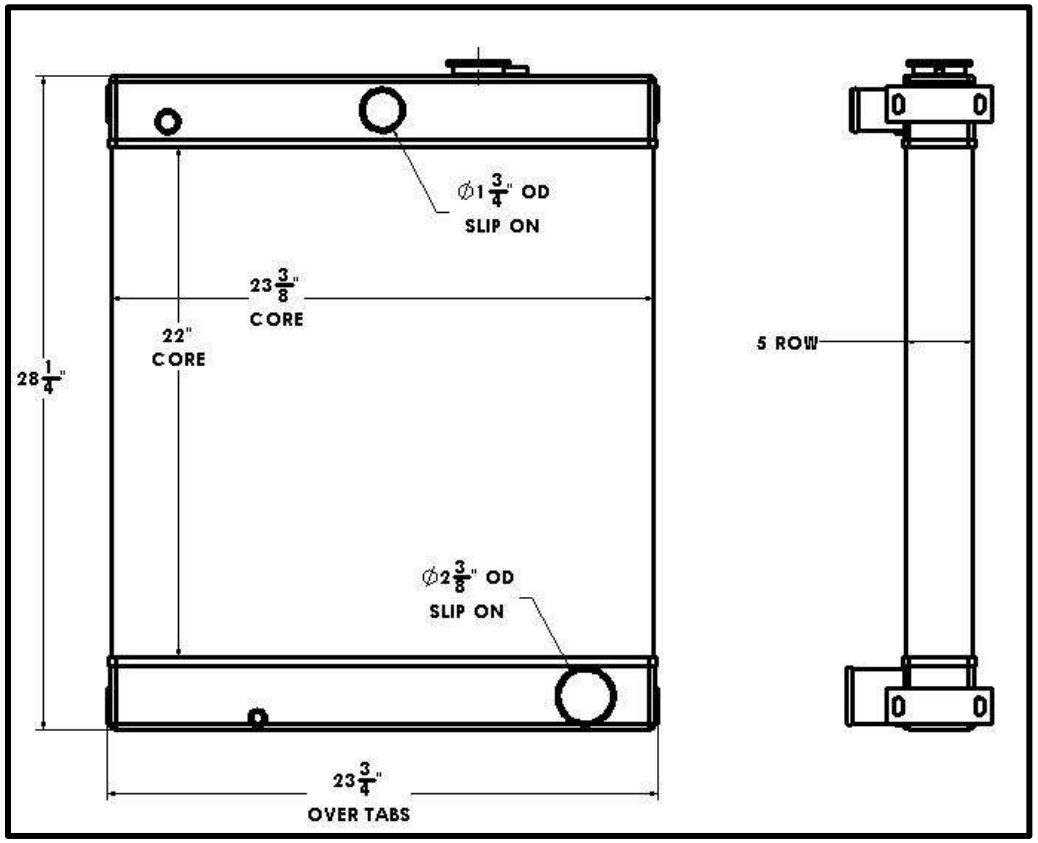

Overall Dimensions: 28-1/4” X 23-1/2” X 3-1/2”
Core: 22” X 23-3/8” X 5 ROW
Inlet: 1-3/4”OD
Outlet: 2-3/8”OD

Tel 1.800.774.2168
www.bgrradiator.com

BGR Part Number: ST-0134-4M-EF
Kohler 2420790100, RPN68.06101-71 Daehung RAD

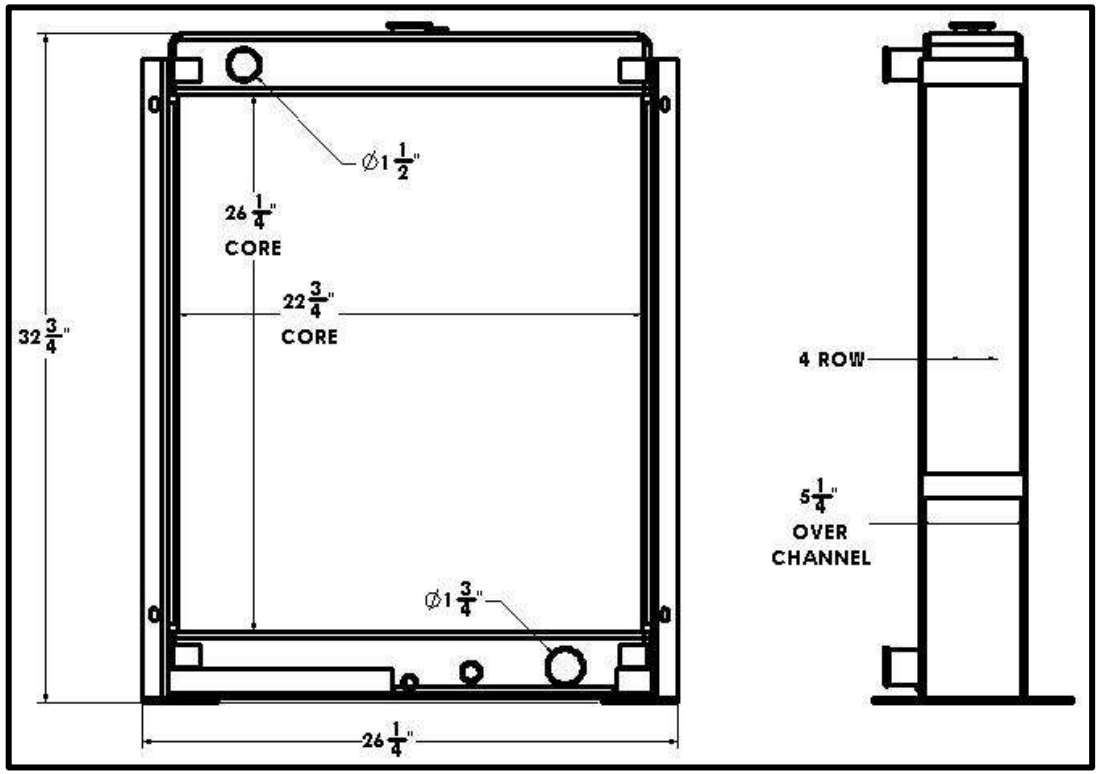

Overall Dimensions: 32-3/4” X 26-1/4” X 5-1/4”
Core: 26-1/4” X 22-3/4” X 4 ROW
Inlet: 1-1/2”OD
Outlet: 1-3/4”OD

Listed dimensions may vary slightly from OE

BGR Part Number: ST-0135-4T-NC
Rad Spec A-255604 Kohler 80ROZ281

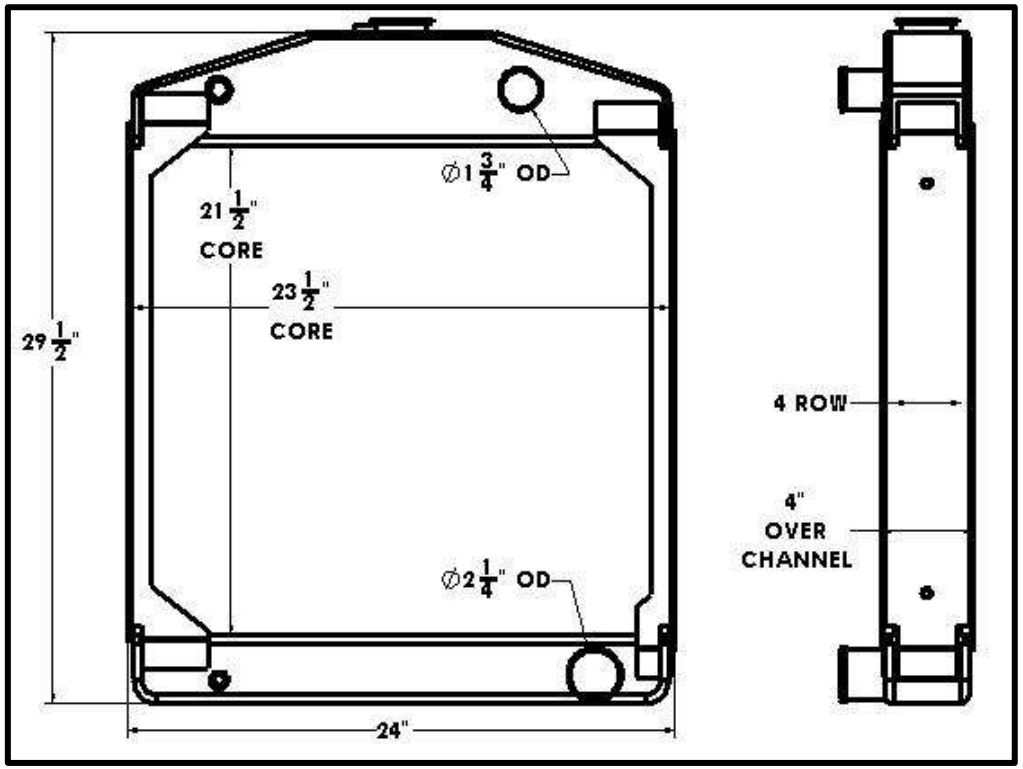

Overall Dimensions: 29-1/2” X 24” X 4”
Core: 21-1/2” X 23-1/2” X 4 ROW
Inlet: 1-3/4”OD
Outlet: 2-1/4”OD

Tel 1.800.774.2168
www.bgrradiator.com

BGR Part Number: ST-0136-5I-F
A-279028

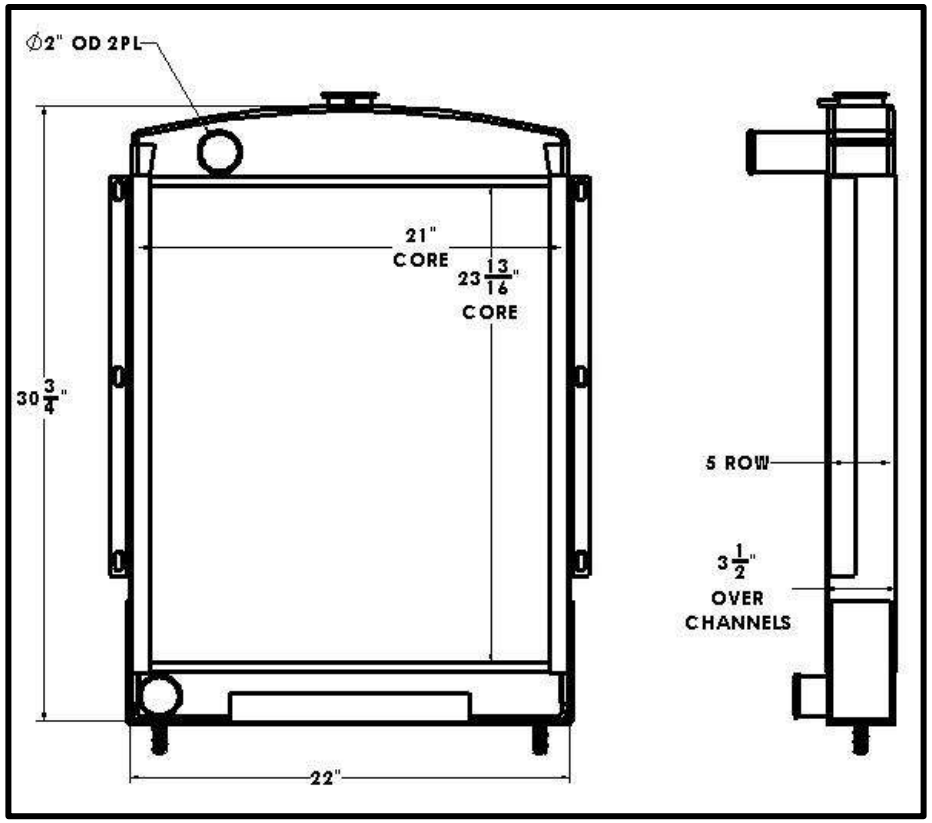

Overall Dimensions: 30-3/4” X 22” X 3-1/2”
Core: 23-13/16” X 21” X 5 ROW
Inlet: 2”OD
Outlet: 2”OD

Listed dimensions may vary slightly from OE

BGR Part Number: ST-0137-5I-EF
KOHLER GM84763

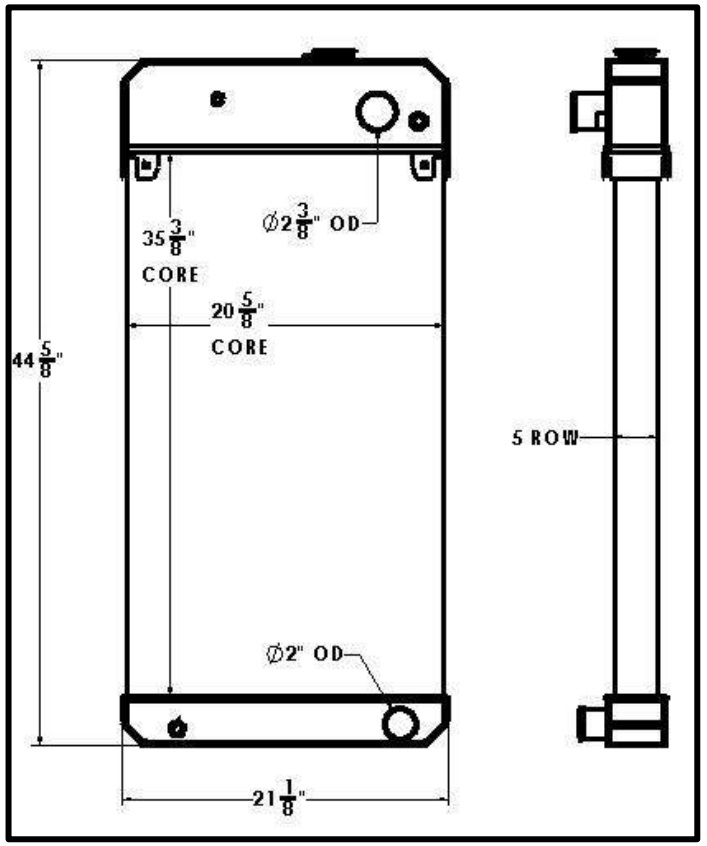

Overall Dimensions: 44-5/8” X 21” X 4-1/4”
Core: 35-3/8” X 20-5/8” X 5 ROW
Inlet: 2-3/8”OD
Outlet: 2”OD

Tel 1.800.774.2168
www.bgrradiator.com

BGR Part Number: ST-0138-3M-NC

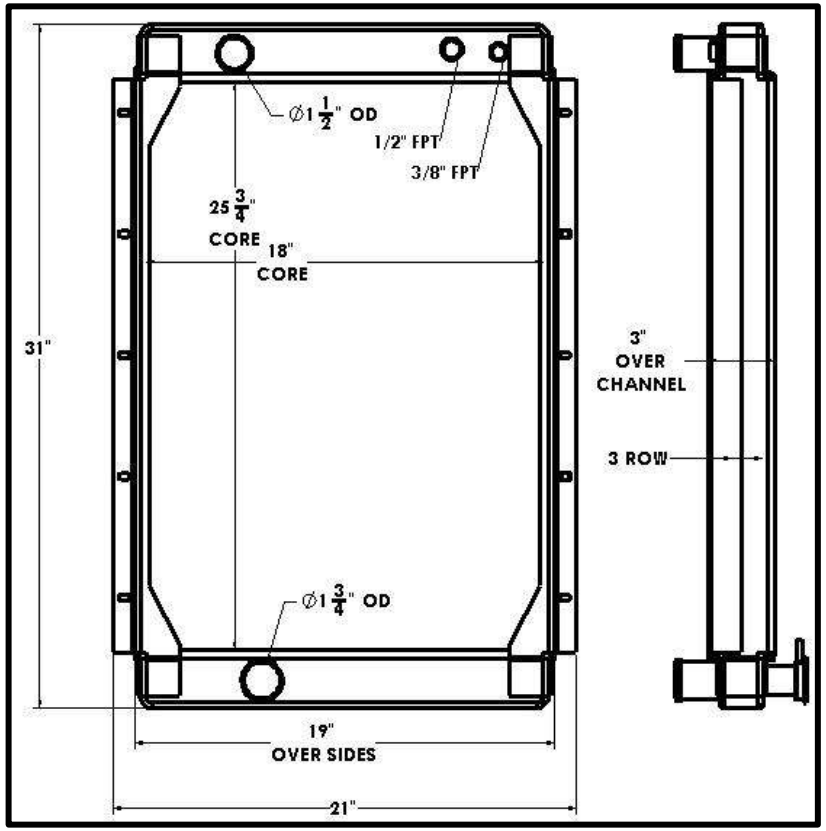

Overall Dimensions: 31” X 19” X 3”
Core: 25-3/4” X 18” X 3 ROW
Inlet: 1-1/2”OD
Outlet: 1-3/4”OD

Listed dimensions may vary slightly from OE

BGR Part Number: ST-0139-4T-NC
12927B10

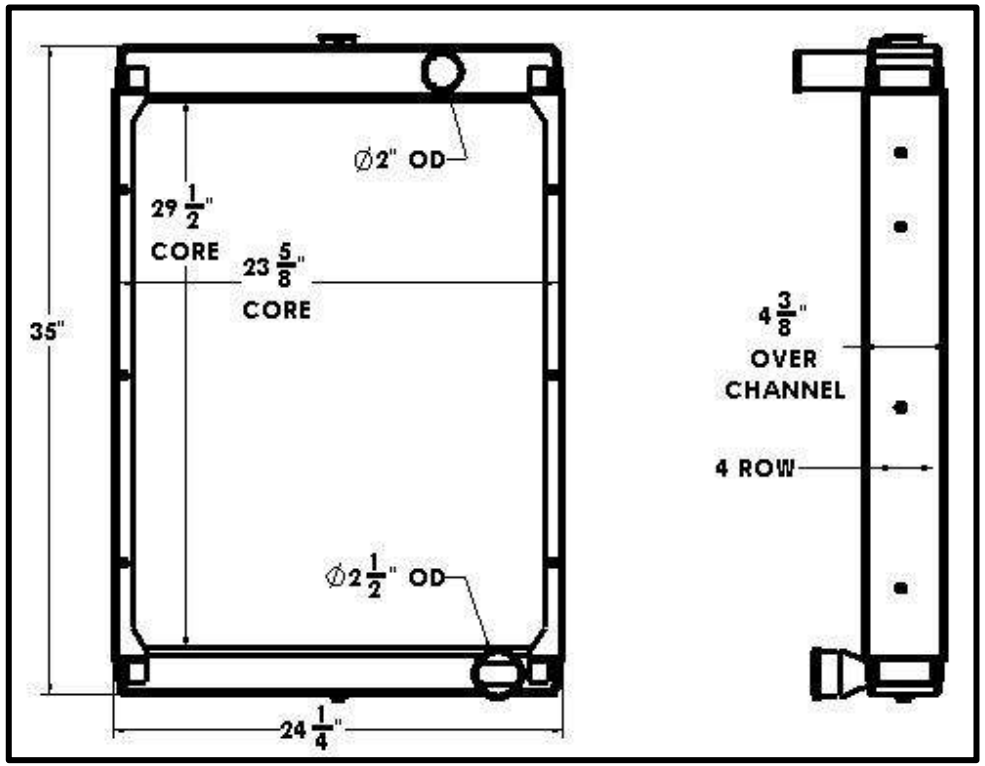

Overall Dimensions: 35” X 24-1/4” X 4-3/8”
Core: 29-1/2” X 23-5/8” X 4 ROW
Inlet: 2”OD
Outlet: 2-1/2”OD

Tel 1.800.774.2168
www.bgrradiator.com

BGR Part Number: ST-0140-4I-F
MODINE 1A14487

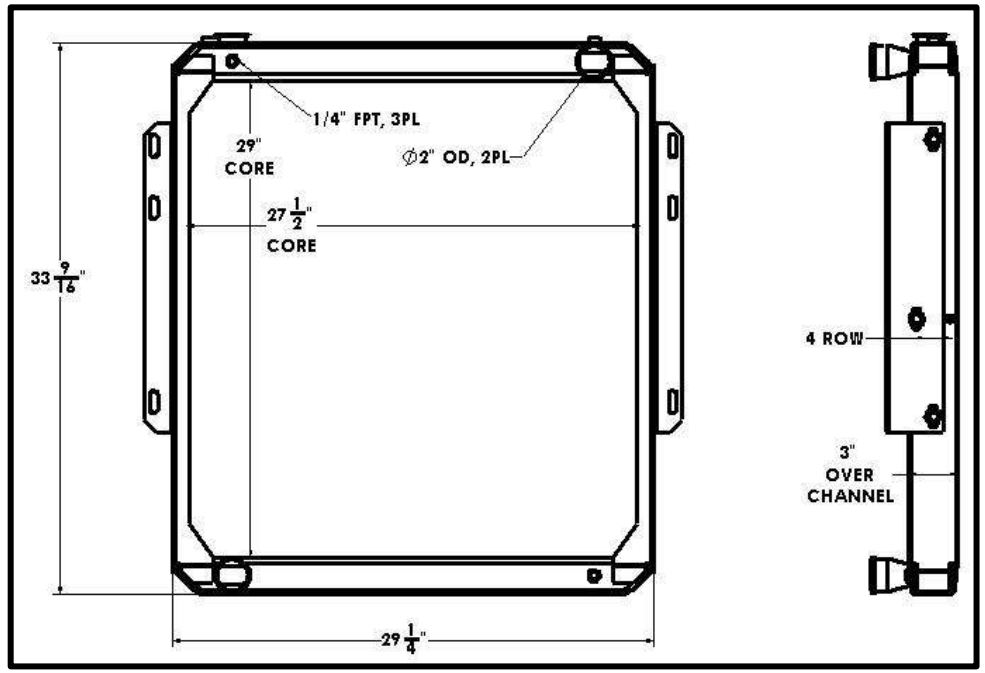

Overall Dimensions: 33-9/16” X 29-1/4” X 3”
Core: 29” X 27-1/2” X 4 ROW
Inlet: 2”OD
Outlet: 2”OD

Listed dimensions may vary slightly from OE

BGR Part Number: ST-0141-7I-F
ONAN PART NUMBER 130-1996

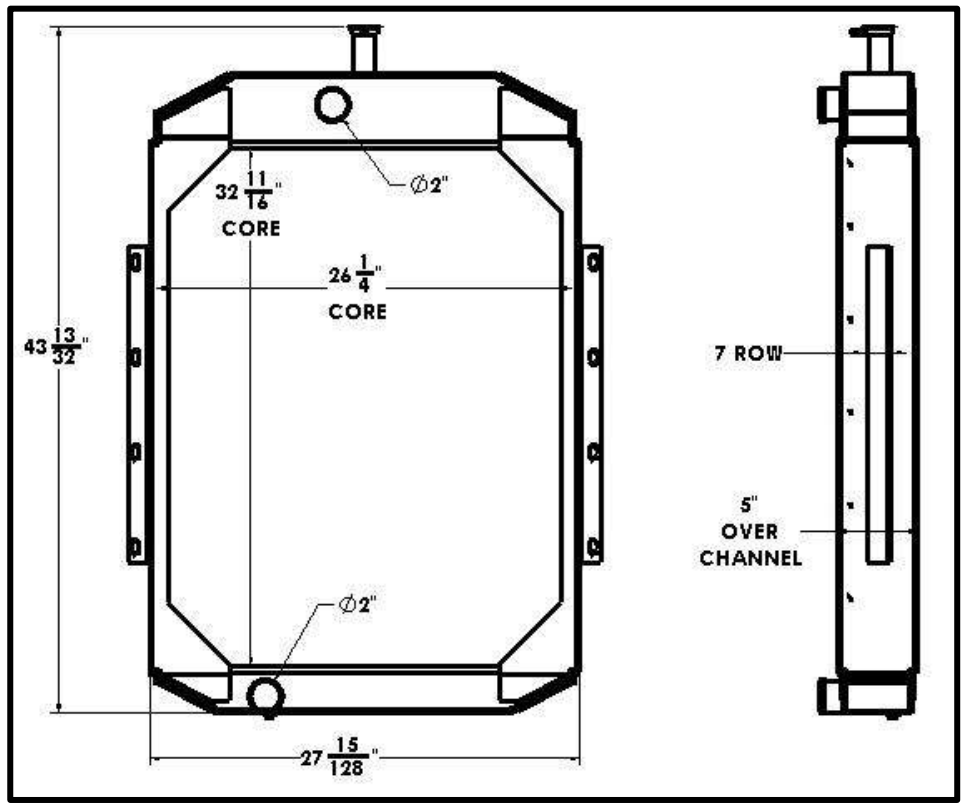

Overall Dimensions: 43-13/32” X 27-15/128” X 5”
Core: 32-11/16” X 26-1/4” X 7 ROW
Inlet: 2”OD
Outlet: 2”OD

Tel 1.800.774.2168
www.bgrradiator.com

BGR Part Number: ST-0142-5I-F
ONAN PART NUMBER 130-1238

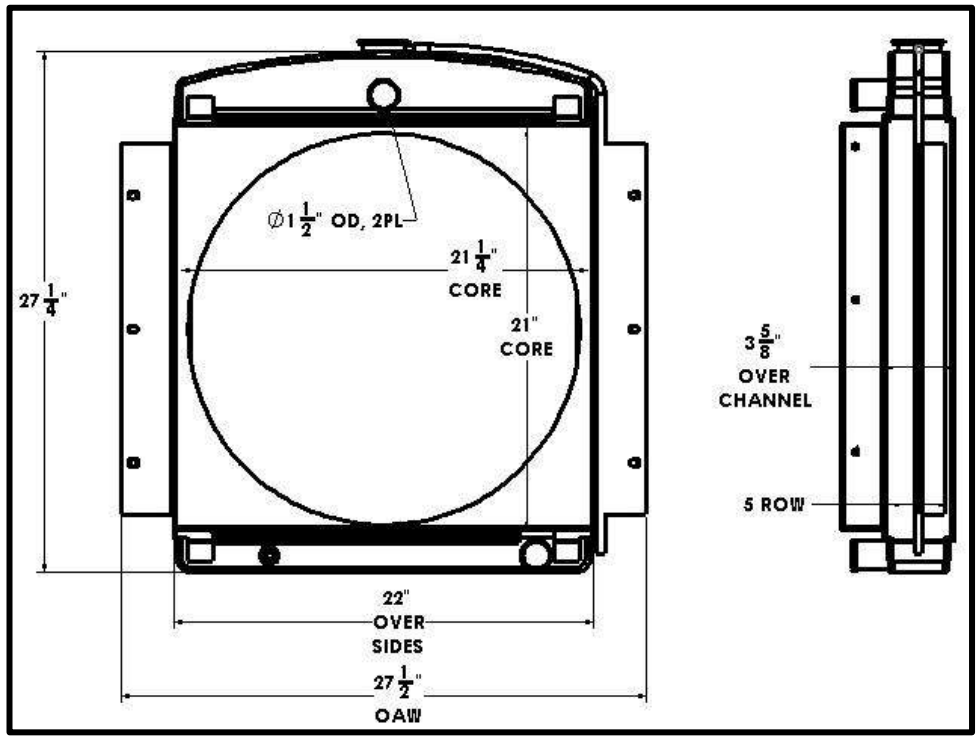

Overall Dimensions: 27-1/4” X 22” X 3-5/8”
Core: 21” X 21-1/4” X 5 ROW
Inlet: 1-1/2”OD
Outlet: 1-1/2”OD

Listed dimensions may vary slightly from OE

BGR Part Number: ST-0143-2VTU-EF
130-4722 ONAN QUIET COOL 12.5KW

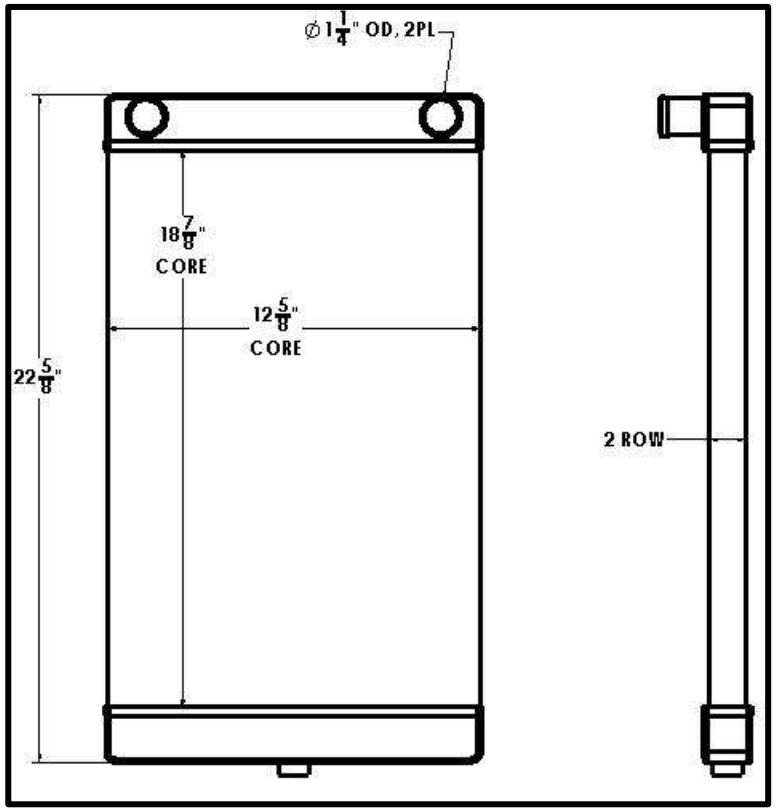

Overall Dimensions: 22-5/8” X 13” X 2-1/4”
Core: 18-7/8” X 12-5/8” X 2 ROW
Inlet: 1-1/4”OD
Outlet: 1-1/4”OD

Tel 1.800.774.2168
www.bgrradiator.com

BGR Part Number: ST-0144-5T-NC
MODINE 3A49104,26 06052,AT210996 JD 700

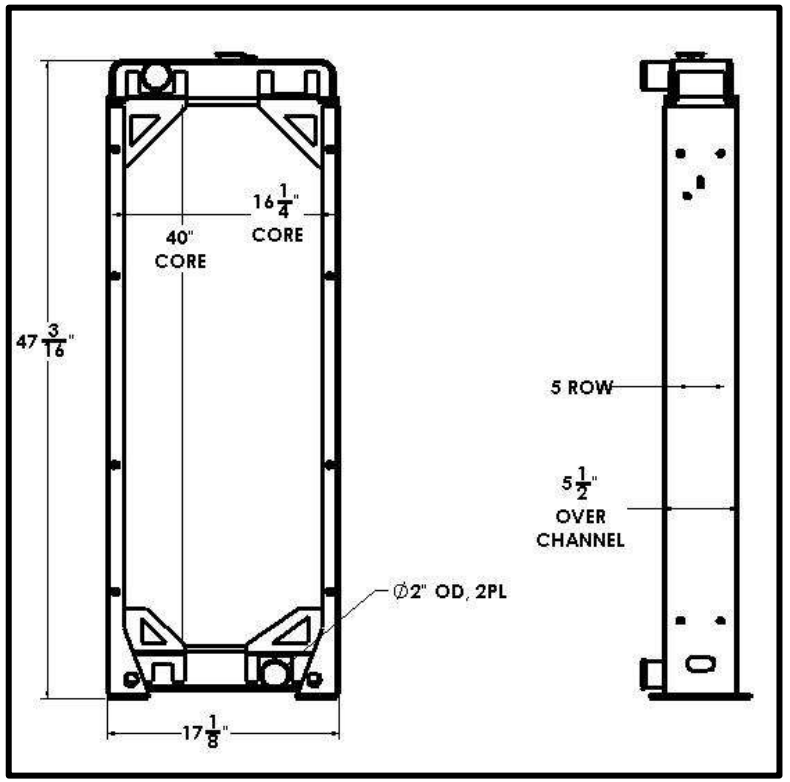

Overall Dimensions: 47-3/16” X 17-1/8” X 5-1/2”
Core: 40” X 16-1/4” X 5 ROW
Inlet: 2”OD
Outlet: 2”OD

Listed dimensions may vary slightly from OE

BGR Part Number: ST-0145-6M-F
Caterpillar 6308 F8

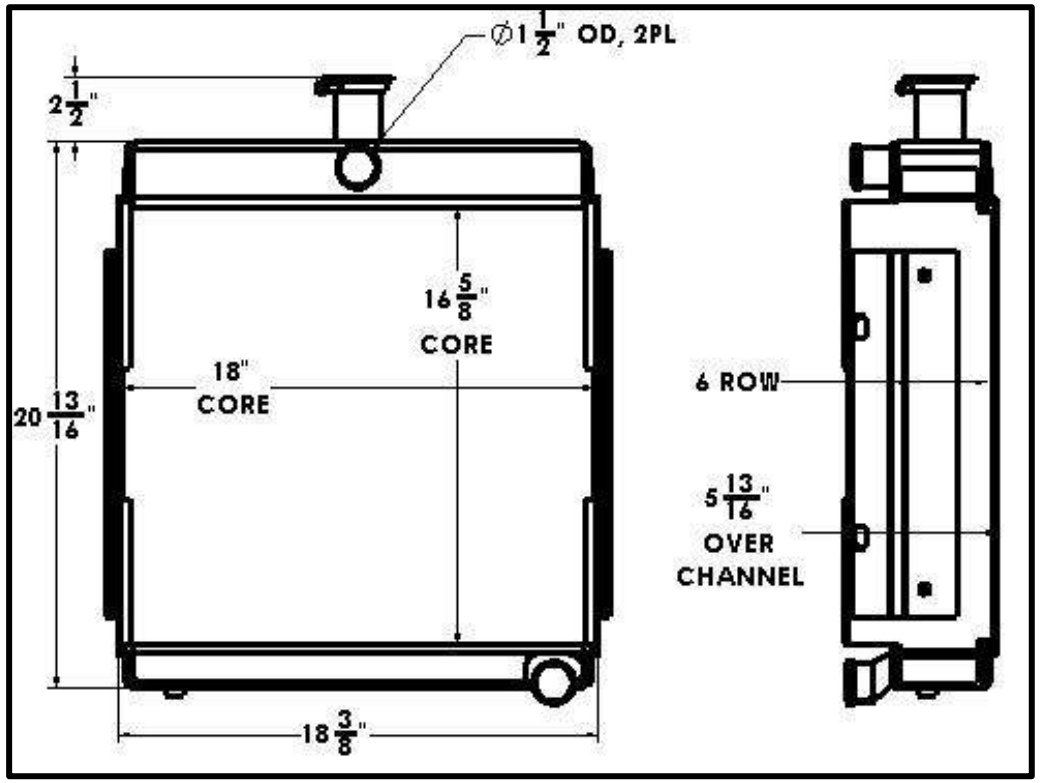

Overall Dimensions: 20-13/16” X 18-3/8” X 5-13/16”
Core: 16-5/8” X 18” X 6 ROW
Inlet: 1-1/2”OD
Outlet: 1-1/2”OD

Tel 1.800.774.2168
www.bgrradiator.com

BGR Part Number: ST-0146-5N-NC
KOHLER 80ROFJ, A-360907

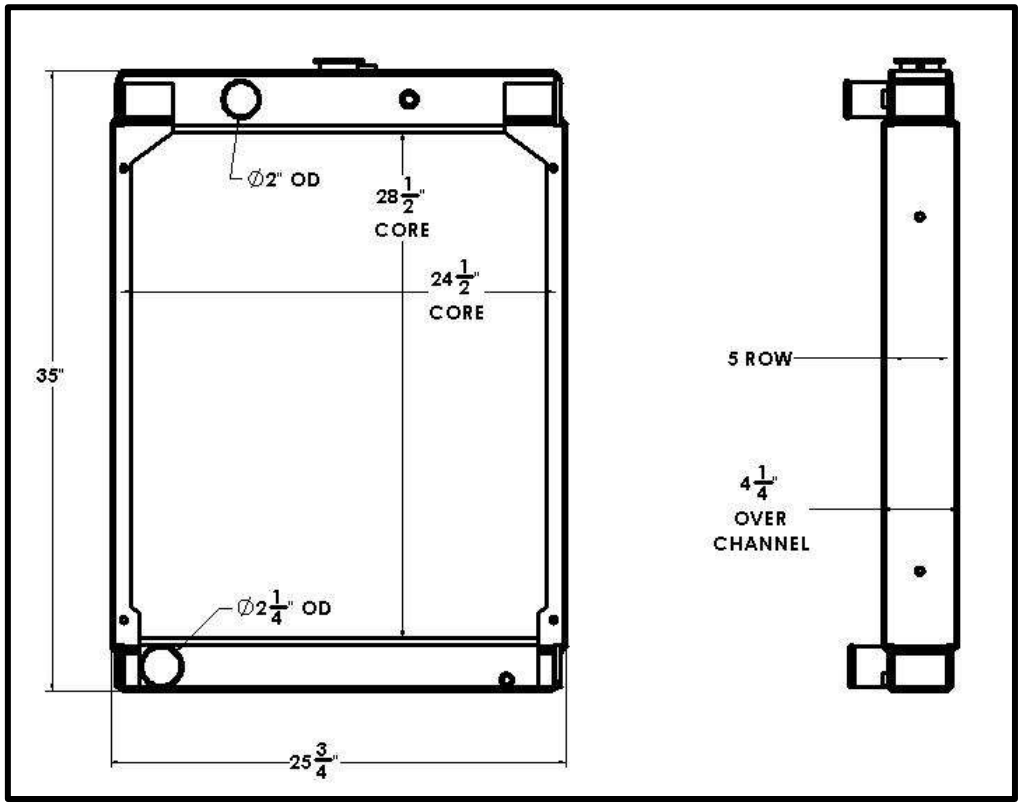

Overall Dimensions: 34-3/4” X 26” X 4-1/4”
Core: 28-1/4” X 23-13/16” X 5 ROW
Inlet: 2”OD
Outlet: 2-1/4”OD

Listed dimensions may vary slightly from OE

BGR Part Number: ST-0147-6M-TT
GENERAC PN OL3105A-1301005

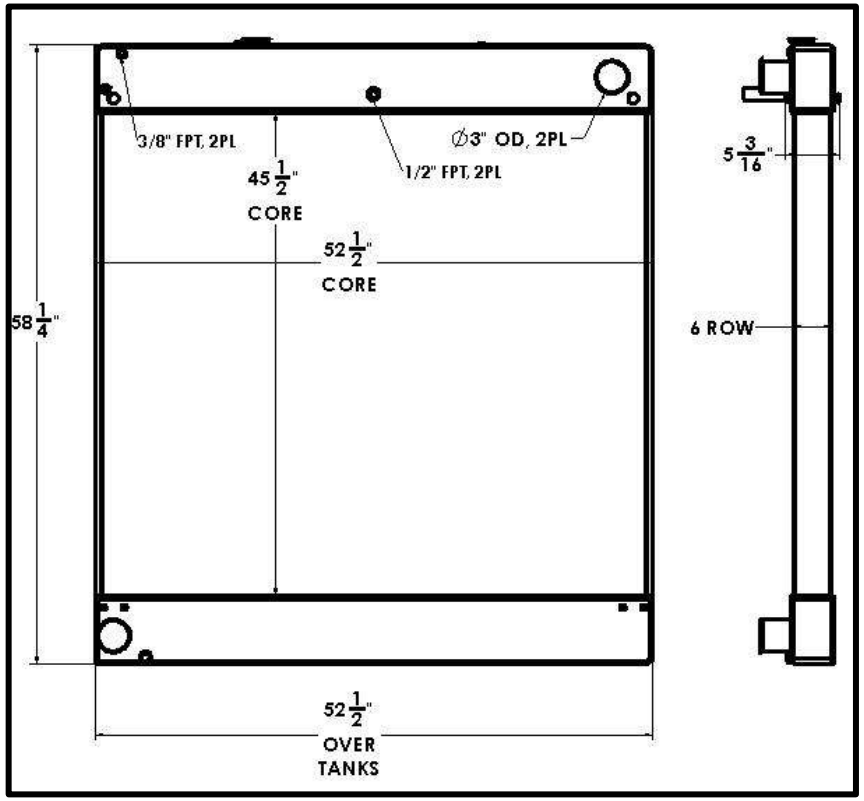

Overall Dimensions: 58-1/4” X 52-1/2” X 5”
Core: 45-1/2” X 52-1/2” X 6 ROW
Inlet: 3”OD
Outlet: 3”OD

Tel 1.800.774.2168
www.bgrradiator.com

BGR Part Number: ST-0148-5N-B
Modine 1A17130, 0398071

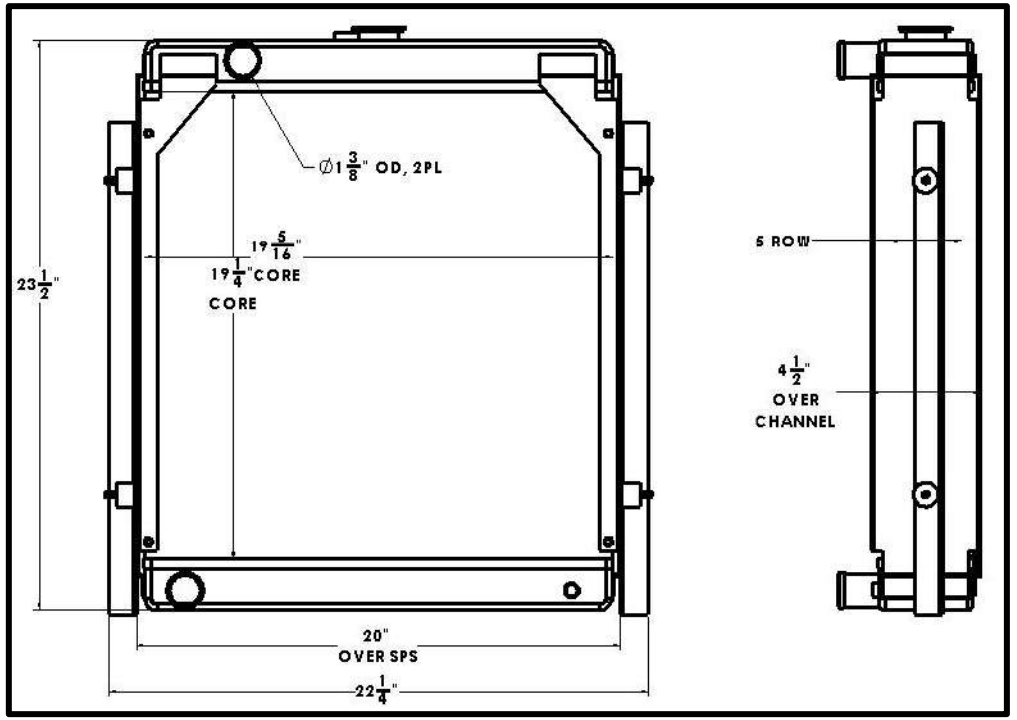

Overall Dimensions: 23-1/2” X 20” X 4-1/2”
Core: 19-1/4” X 19-5/16” X 5 ROW
Inlet: 1-3/8”OD
Outlet: 1-3/8”OD

Listed dimensions may vary slightly from OE

BGR Part Number: ST-0149-8N-EF
MARSTON PA 66 GF 30

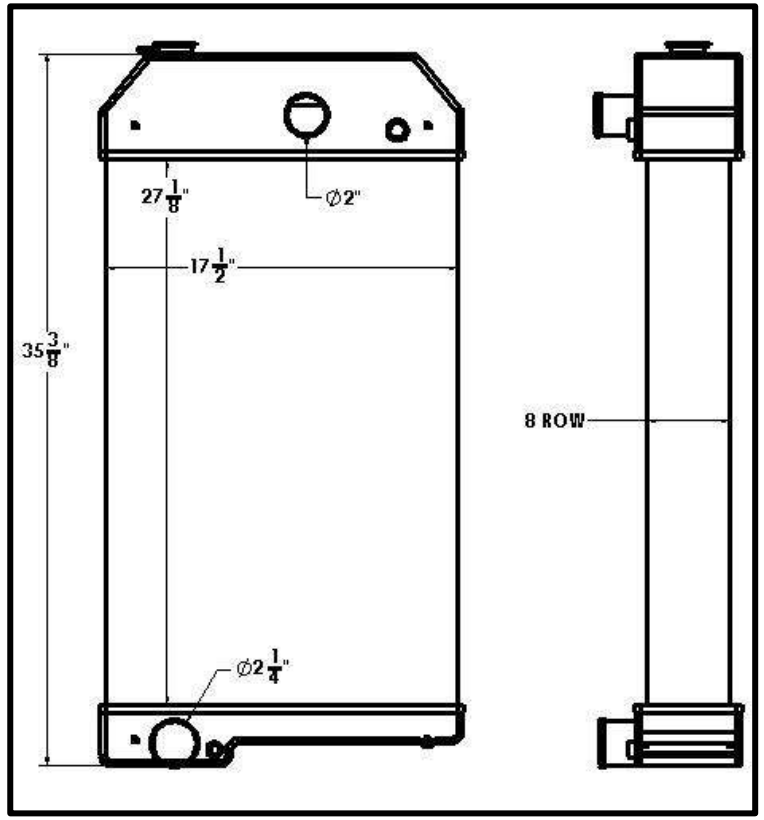

Overall Dimensions: 35-3/8” X 18” X 5”
Core: 27-1/8” X 17-1/2” X 8 ROW
Inlet: 2”OD
Outlet: 2-1/4”OD

Tel 1.800.774.2168
www.bgrradiator.com

BGR Part Number: ST-0150-6H-EF

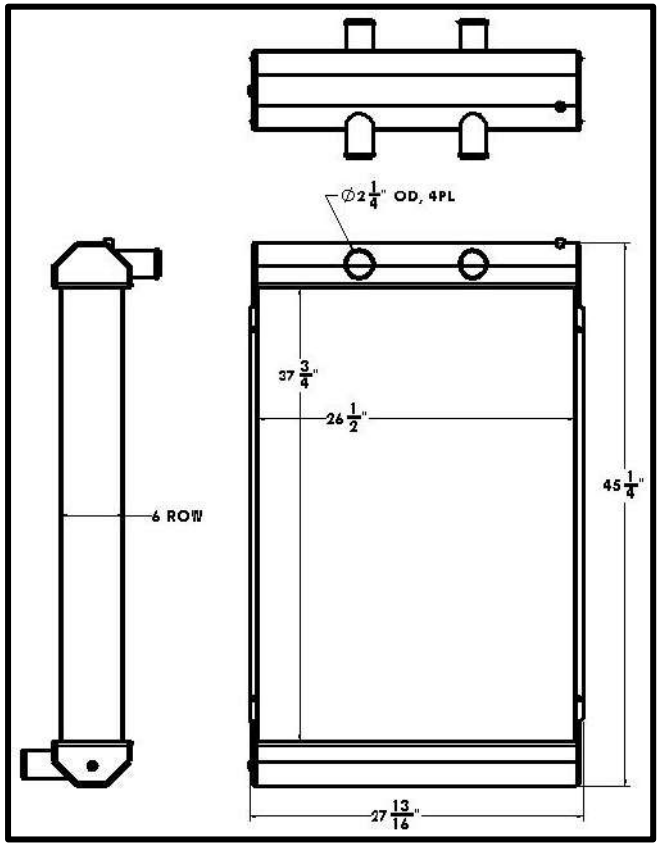

Overall Dimensions: 45-1/4” X 27-13/16” X 6-1/2”
Core: 37-3/4” X 26-1/2” X 6 ROW
Inlet: 2-1/4”OD
Outlet: 2-1/4”OD

Listed dimensions may vary slightly from OE

BGR Part Number: ST-0151-4N-NC
ONAN 130-4222-02

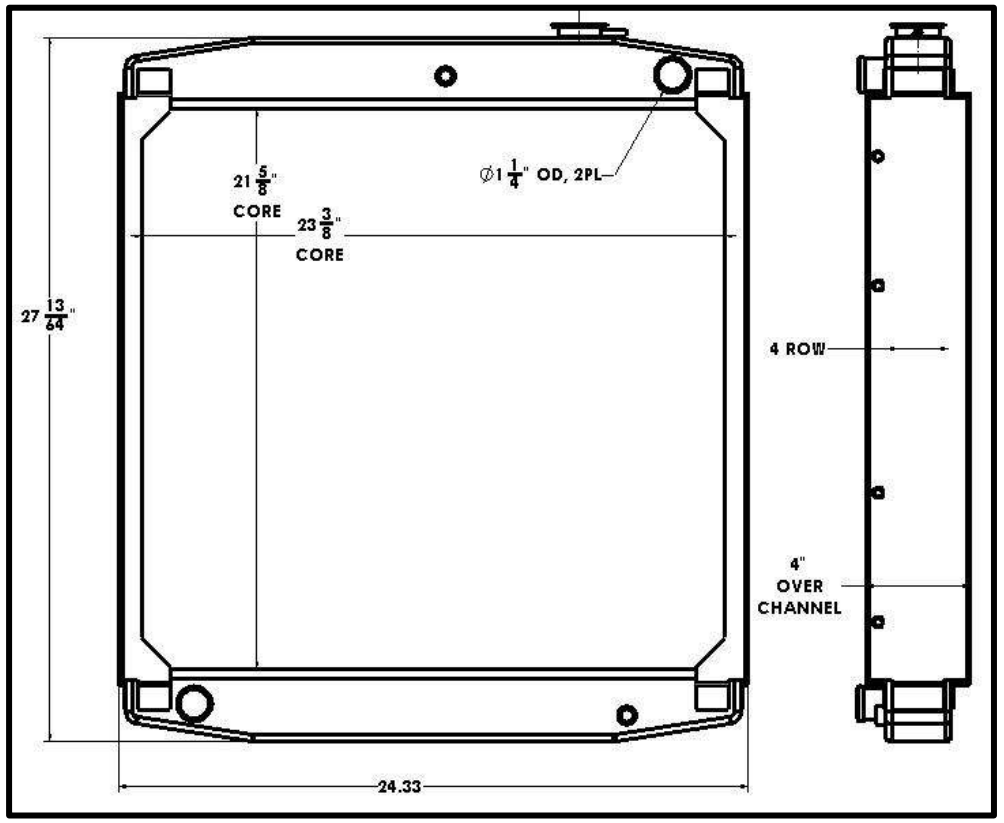

Overall Dimensions: 27-13/64” X 24-5/16” X 4”
Core: 21-5/8” X 23-3/8” X 4 ROW
Inlet: 1-1/4”OD
Outlet: 1-1/4”OD

Tel 1.800.774.2168
www.bgrradiator.com

BGR Part Number: ST-0152-3N-NC
ONAN 130-4222-01

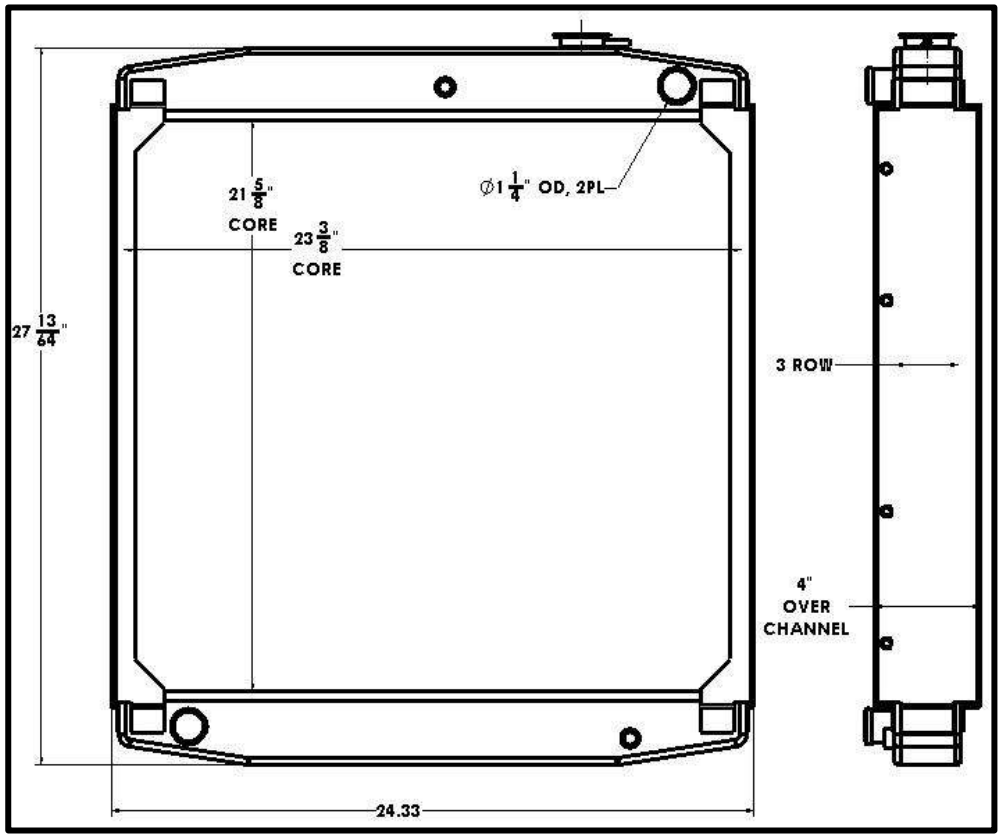

Overall Dimensions: 27-13/64” X 24-5/16” X 4”
Core: 21-5/8” X 23-3/8” X 4 ROW
Inlet: 1-1/4”OD
Outlet: 1-1/4”OD

Listed dimensions may vary slightly from OE

BGR Part Number: ST-0153-6I-NC
Cat 7C8627 6 ROW VERION

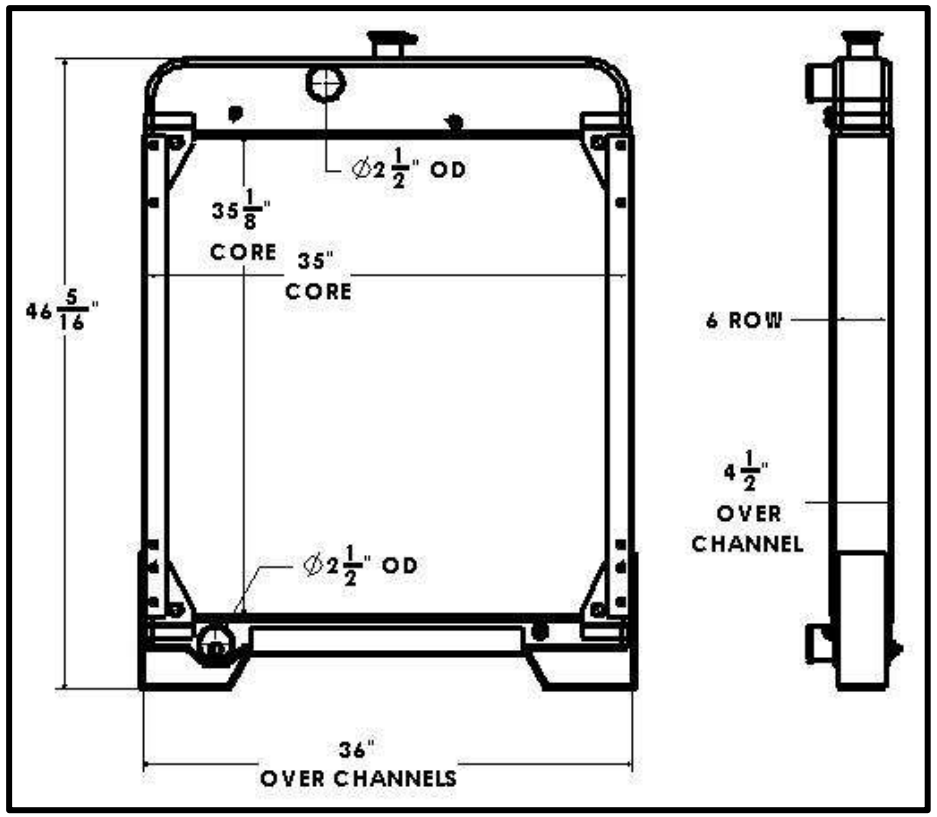

Overall Dimensions: 46-5/16” X 36” X 4-1/2”
Core: 35-1/8” X 35” X 6 ROW
Inlet: 2-1/2”OD
Outlet: 2-1/2”OD

Tel 1.800.774.2168
www.bgrradiator.com

BGR Part Number: ST-0154-4I-B
DR 1091

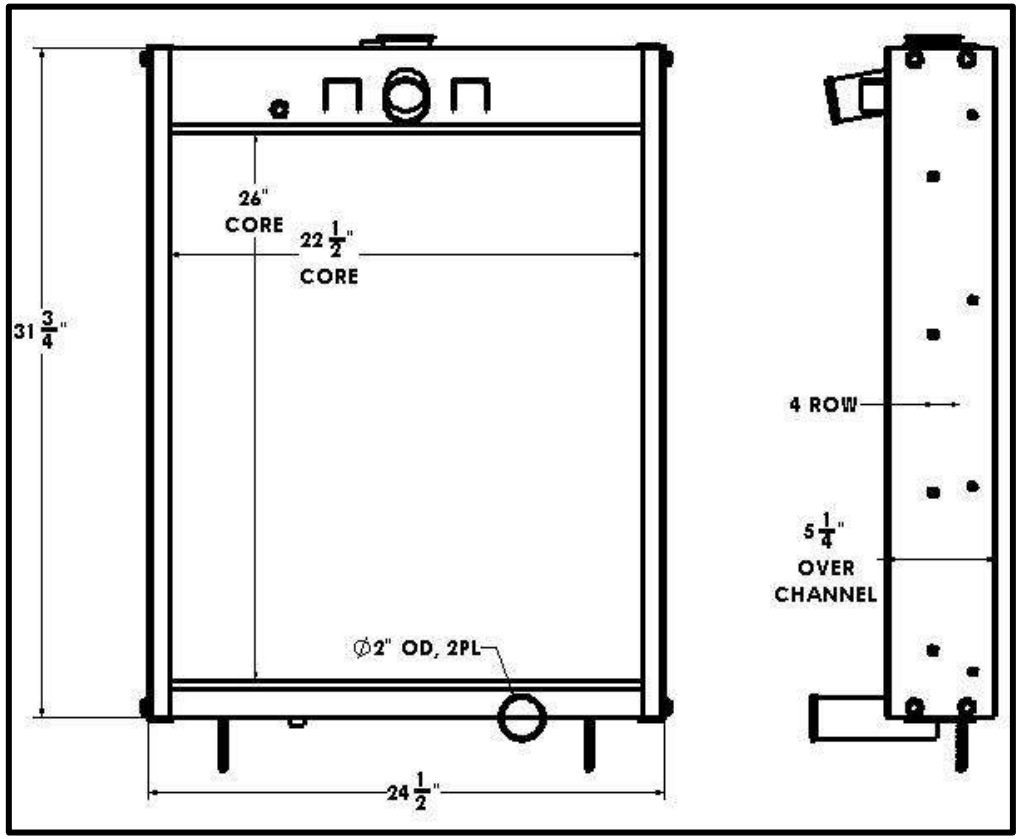

Overall Dimensions: 31-3/4” X 24-1/2” X 5-1/4”
Core: 26” X 22-1/8” X 4 ROW
Inlet: 2”OD
Outlet: 2”OD

Listed dimensions may vary slightly from OE

BGR Part Number: ST-0155-5N-NC

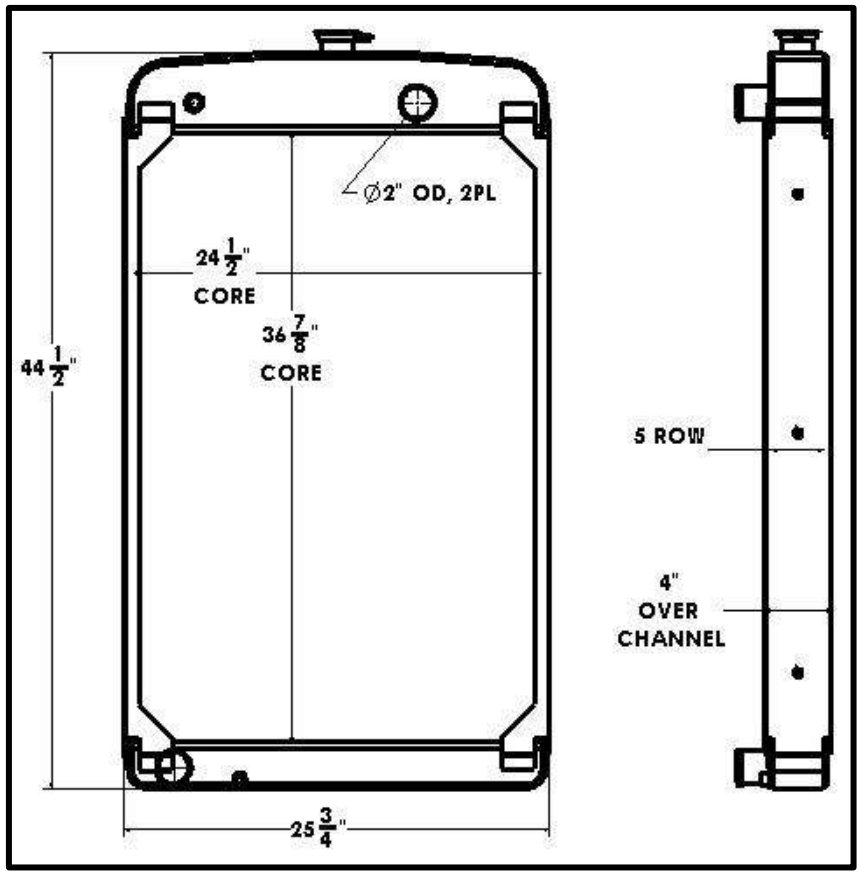

Overall Dimensions: 44-1/2” X 25-3/4” X 4”
Core: 36-7/8” X 24-1/2” X 5 ROW
Inlet: 2”OD
Outlet: 2”OD

Tel 1.800.774.2168
www.bgrradiator.com

BGR Part Number: ST-0156-4H-F

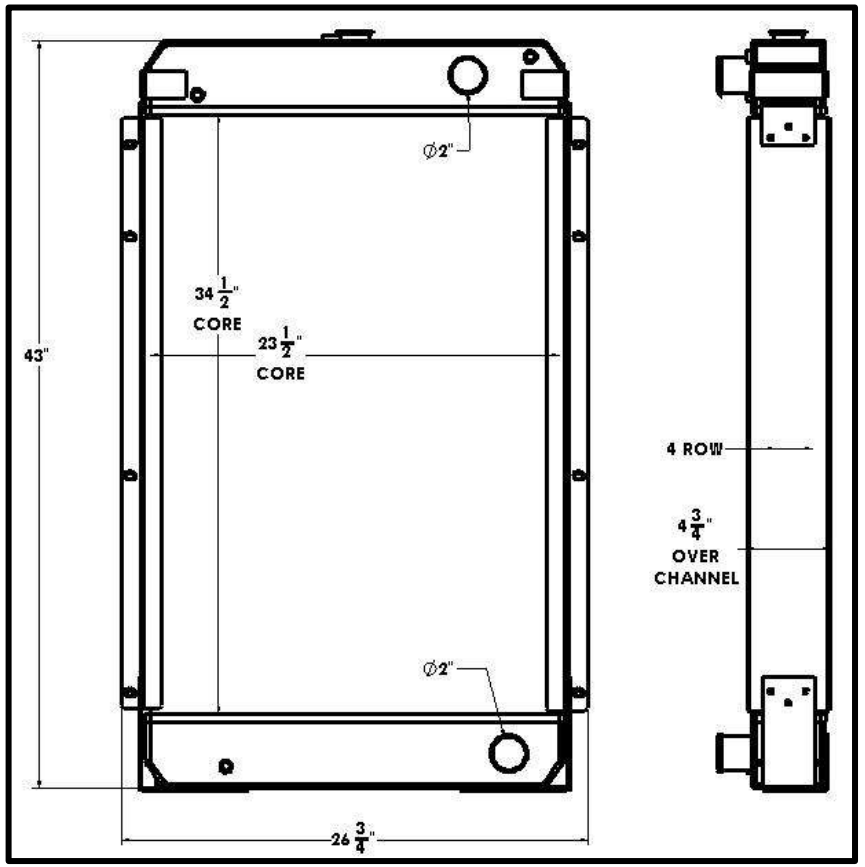

Overall Dimensions: 43” X 26-3/4” X 4-3/4”
Core: 34-1/2” X 23-1/2” X 4 ROW
Inlet: 2”OD
Outlet: 2”OD

Listed dimensions may vary slightly from OE

BGR Part Number: ST-0157-4N-B

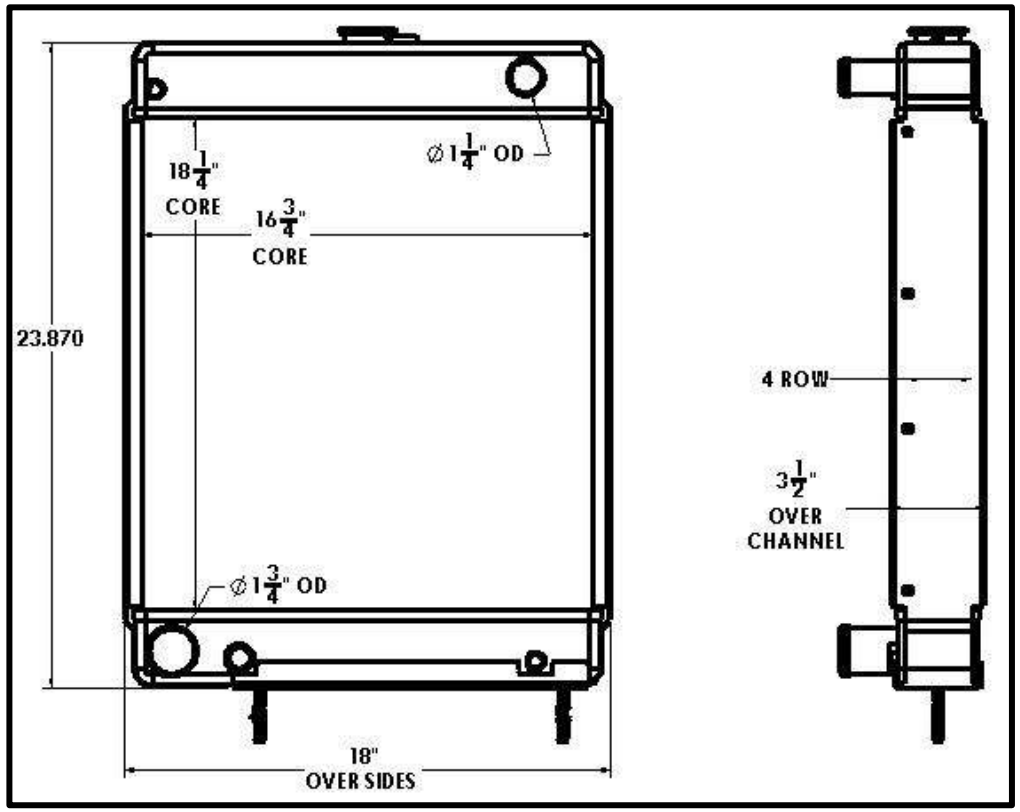

Overall Dimensions: 23-7/8” X 18” X 3-1/2”
Core: 18-1/4” X 16-3/4” X 4 ROW
Inlet: 1-1/4”OD
Outlet: 1-3/4”OD

Tel 1.800.774.2168
www.bgrradiator.com

BGR Part Number: ST-0158-6Z-F
Gen Therm Dyn 1463C

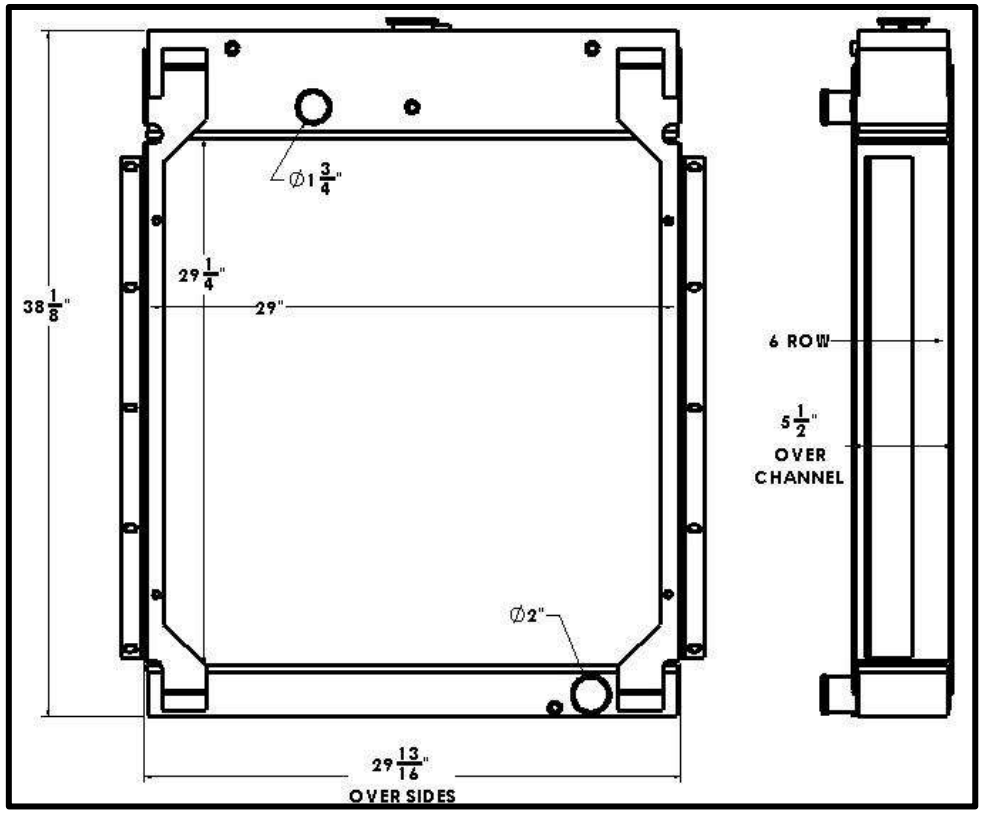

Overall Dimensions: 38-1/8” X 29-13/16” X 5-1/2”
Core: 29-1/4” X 29” X 6 ROW
Inlet: 1-3/4”OD
Outlet: 2”OD

Listed dimensions may vary slightly from OE

BGR Part Number: ST-0159-4I-B

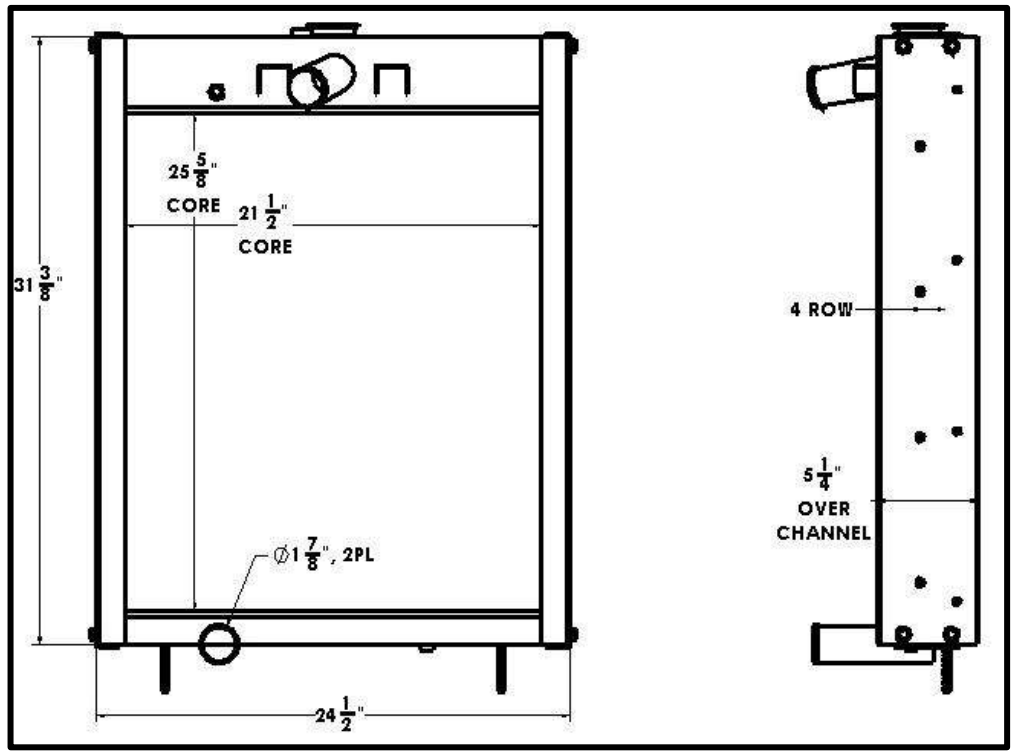

Overall Dimensions: 31-3/8” X 24-1/2” X 5-1/4”
Core: 25-5/8” X 21-1/2” X 4 ROW
Inlet: 1-7/8”OD
Outlet: 1-7/8”OD

Tel 1.800.774.2168
www.bgrradiator.com

BGR Part Number: ST-0160-5I-NC
RS6474, 050190100036, 050190100021

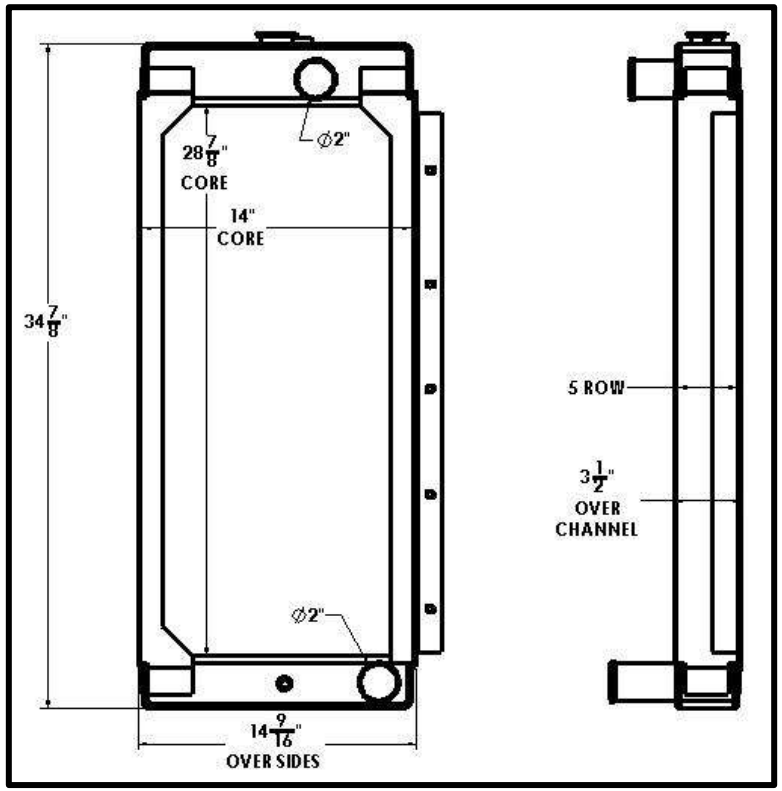

Overall Dimensions: 34-7/8” X 14-9/16” X 3-1/2”
Core: 28-7/8” X 14” X 5 ROW
Inlet: 2”OD
Outlet: 2”OD

ST159

Listed dimensions may vary slightly from OE

ST160

BGR Part Number: ST-0161-4N-NC
Onan Part Number 130-4683

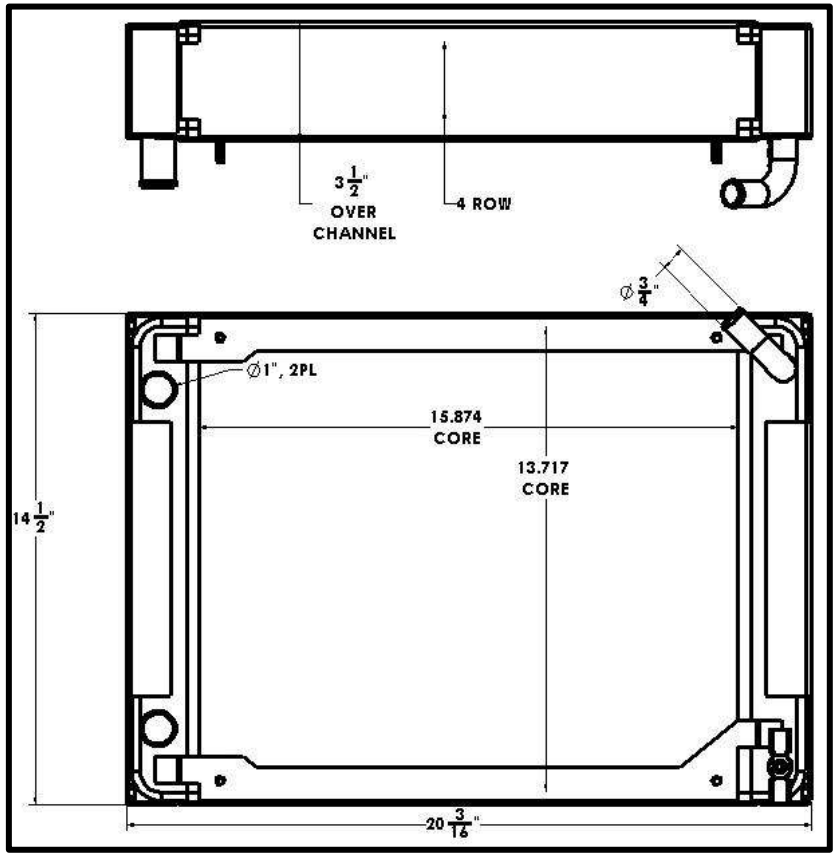

Overall Dimensions: 20-3/16” X 14-1/2” X 3-1/2”
Core: 15-7/8” X 13-3/4” X 4 ROW
Inlet: 1”OD
Outlet: 1”OD

Tel 1.800.774.2168
www.bgrradiator.com

BGR Part Number: ST-0162-7N-NC
Kohler A-290952, Modine 1A10156

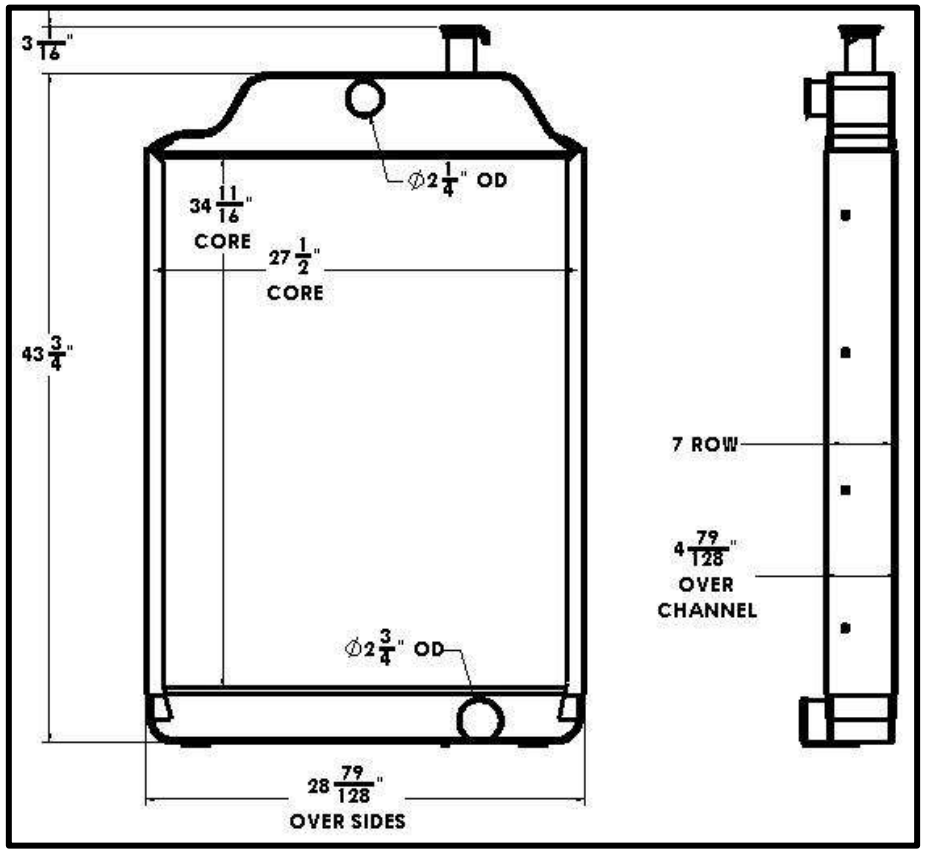

Overall Dimensions: 43-3/4” X 28-79/128” X 4-79/128”
Core: 34-11/16” X 27-1/2” X 7 ROW
Inlet: 2-1/4”OD
Outlet: 2-3/4”OD

ST161

Listed dimensions may vary slightly from OE

ST162

BGR Part Number: ST-0163-6H-NC
SD-2156

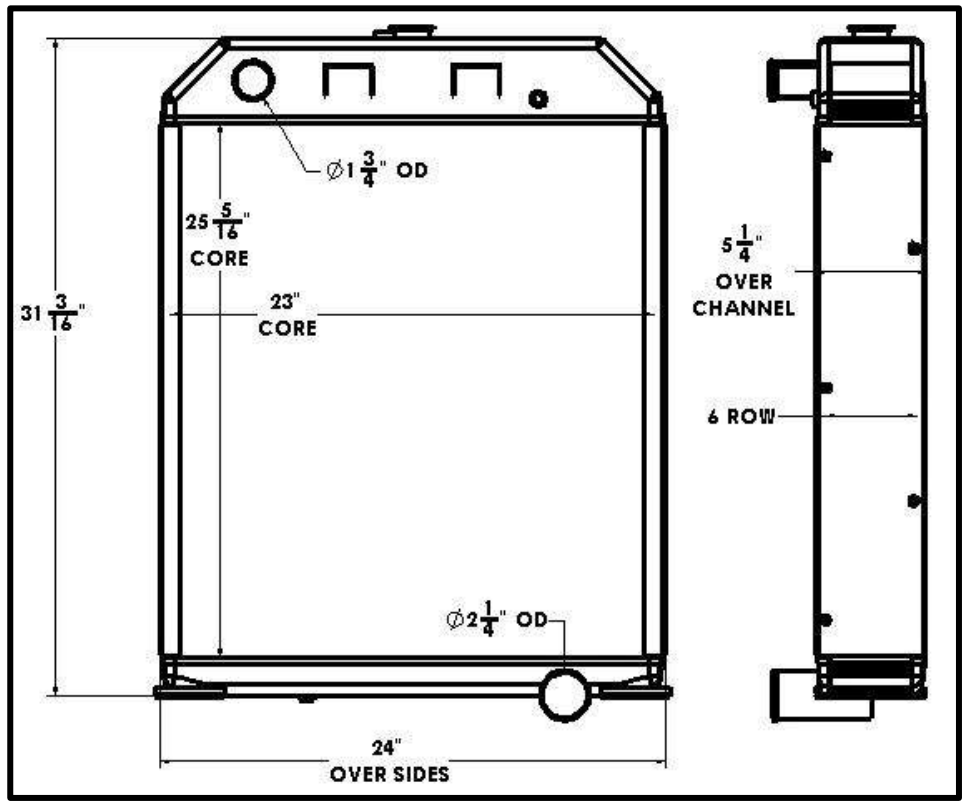

Overall Dimensions: 31-3/16” X 24” X 5-1/4”
Core: 25-5/16” X 23” X 6 ROW
Inlet: 1-3/4”OD
Outlet: 2-1/4”OD

Tel 1.800.774.2168
www.bgrradiator.com

BGR Part Number: ST-0164-5N-NC
Case 387 Loader, 131230A1, 16734

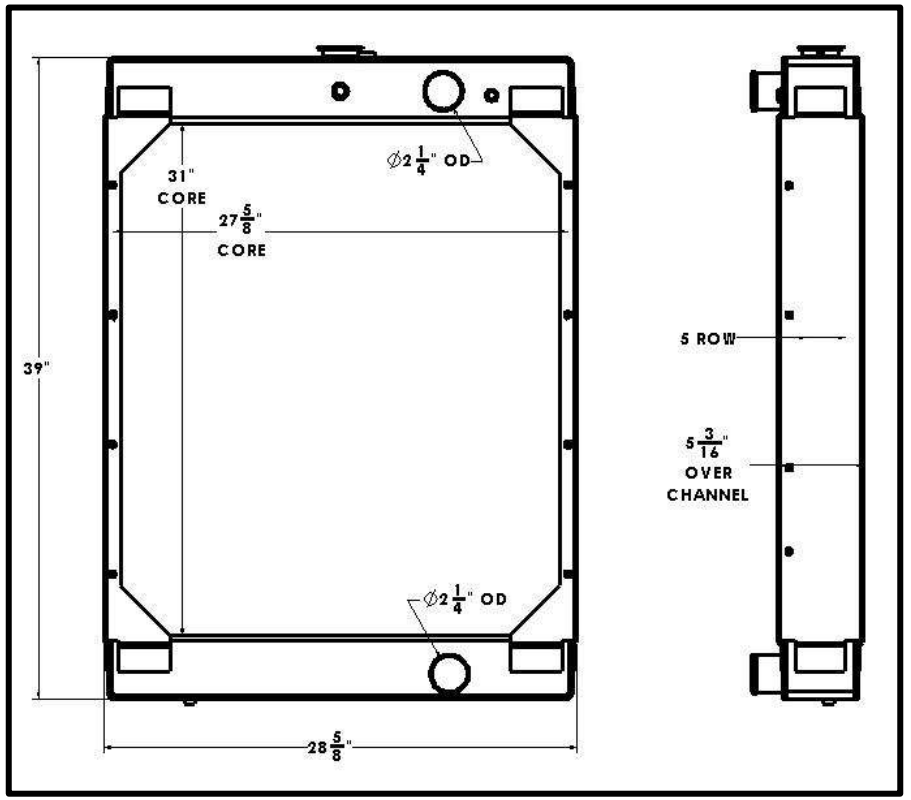

Overall Dimensions: 39” X 28-5/8” X 5-3/16”
Core:31” X 27-5/8” X 5 ROW
Inlet: 2-1/4”OD
Outlet: 2-1/4”OD

Listed dimensions may vary slightly from OE

BGR Part Number: ST-0165-4M-NC
Kohler A-276471

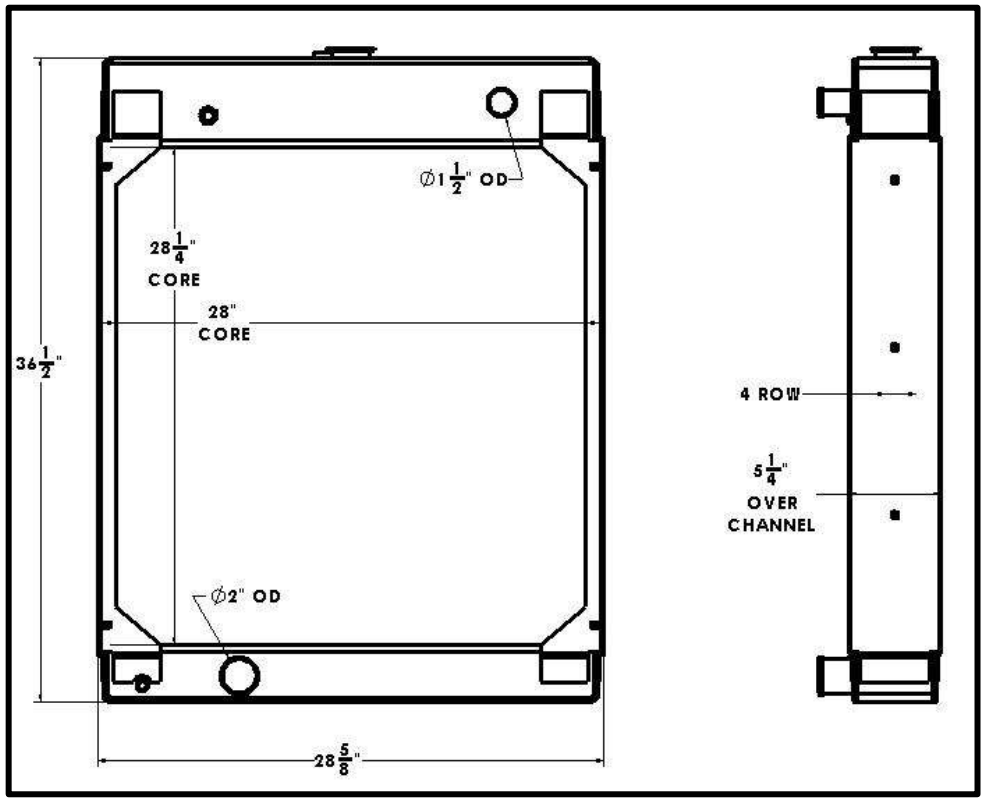

Overall Dimensions: 36-1/2” X 28-5/8” X 5-1/4”
Core: 28-1/4” X 28” X 4 ROW
Inlet: 1-1/2”OD
Outlet: 2”OD

Tel 1.800.774.2168
www.bgrradiator.com

BGR Part Number: ST-0166-4M-NC
Kohler A-336663, 1A19017, 1A17485

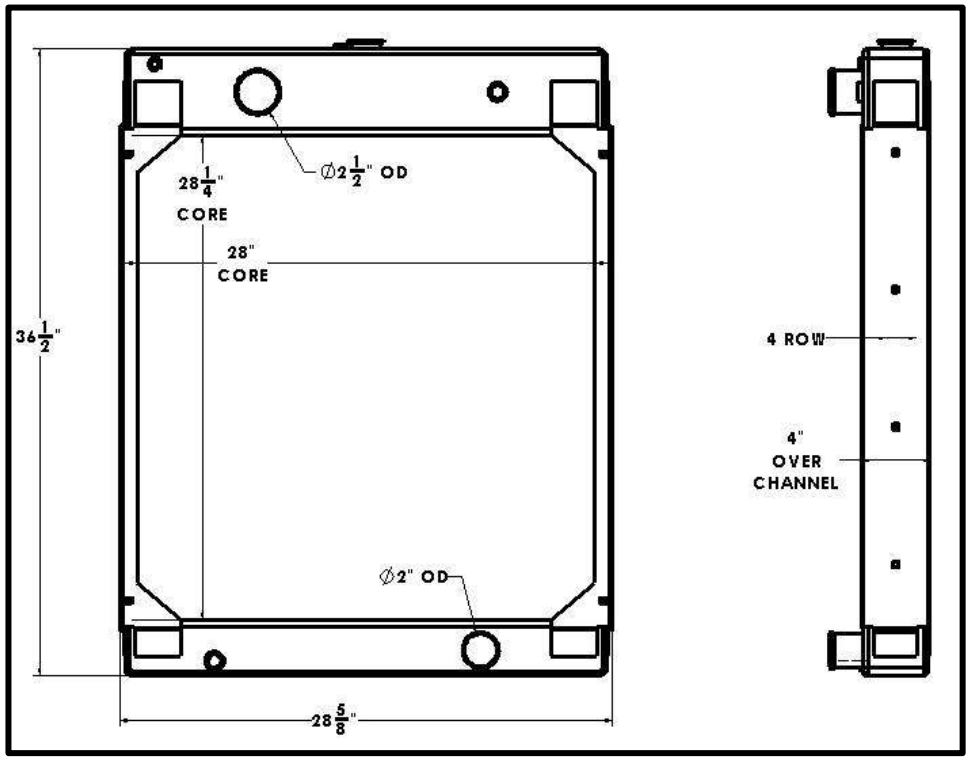

Overall Dimensions: 36-1/2” X 28-5/8” X 4”
Core: 28-1/4” X 28” X 4 ROW
Inlet: 2-1/2”OD
Outlet: 2”OD

Listed dimensions may vary slightly from OE

BGR Part Number: ST-0167-3T-NC
RAD SPEC RS5384, '07BRUSHBANDIT 200XT

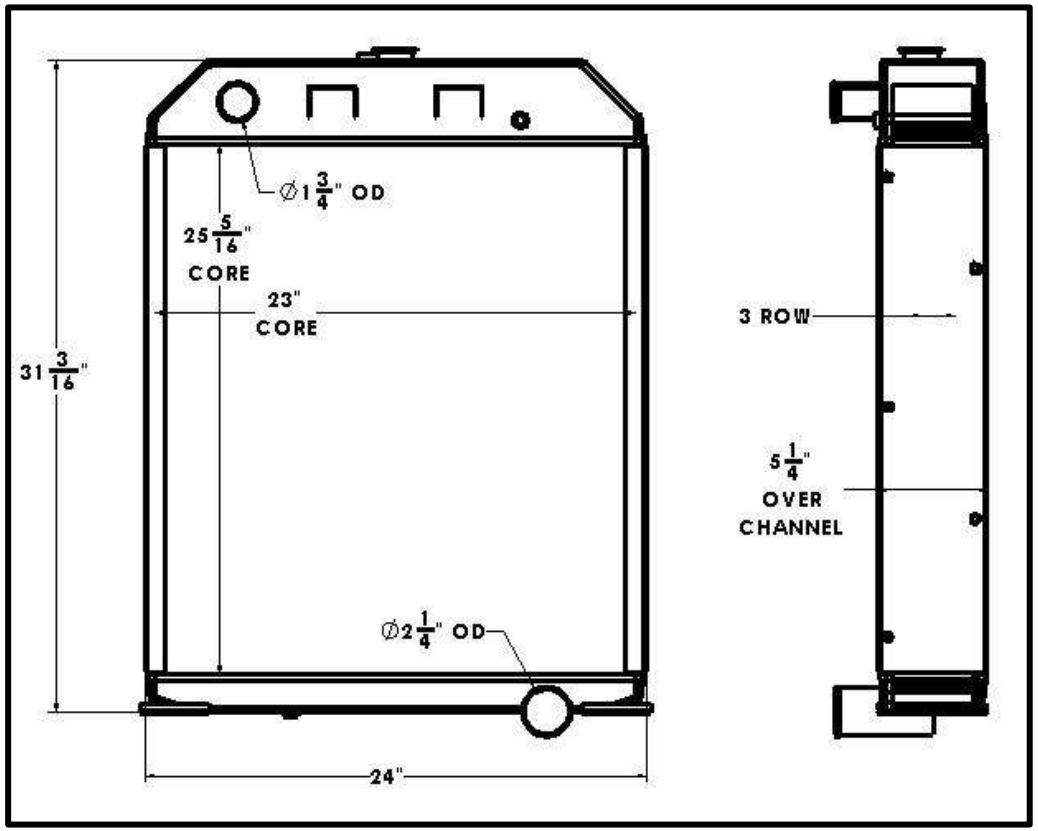

Overall Dimensions: 31-3/16” X 24” X 5-1/4”
Core: 25-5/16” X 24” X 3 ROW
Inlet: 1-3/4”OD
Outlet: 2-1/4”OD

Tel 1.800.774.2168
www.bgrradiator.com

BGR Part Number: ST-0168-4VT-NC
KOHLER GM35307 (GM29698)

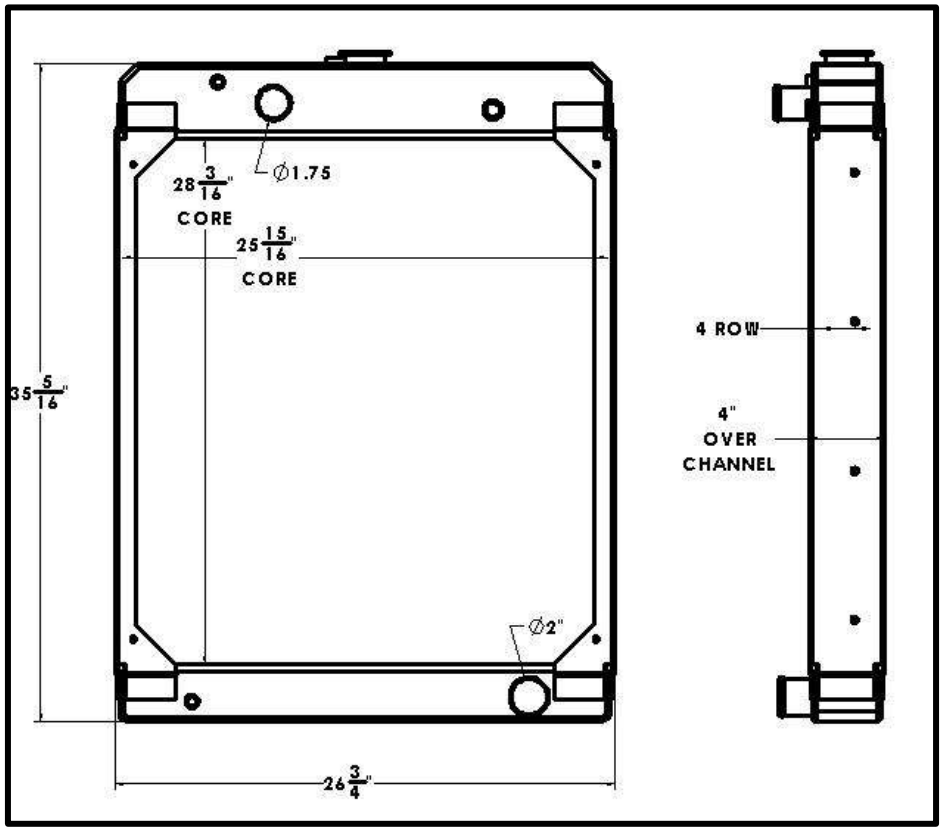

Overall Dimensions: 35-5/16” X 26-3/4” X 4”
Core: 28-3/16” X 25-15/16” X 4 ROW
Inlet: 1-3/4”OD
Outlet: 2”OD

ST167

Listed dimensions may vary slightly from OE

ST168

BGR Part Number: ST-0169-3VT-NC
KOHLER GM29697

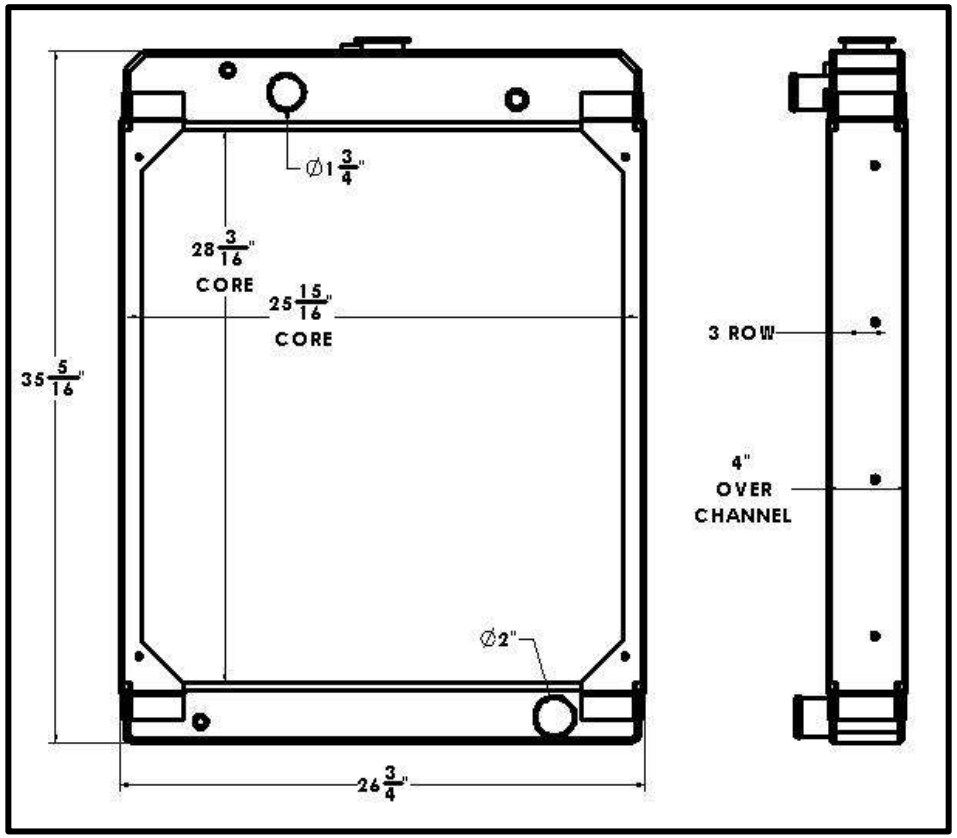

Overall Dimensions: 35-5/16” X 26-3/4” X 4”
Core: 28-3/16” X 25-15/16” X 3 ROW
Inlet: 1-3/4”OD
Outlet: 2”OD

Tel 1.800.774.2168
www.bgrradiator.com

BGR Part Number: ST-0170-2VT-NC
KOHLER GM29696

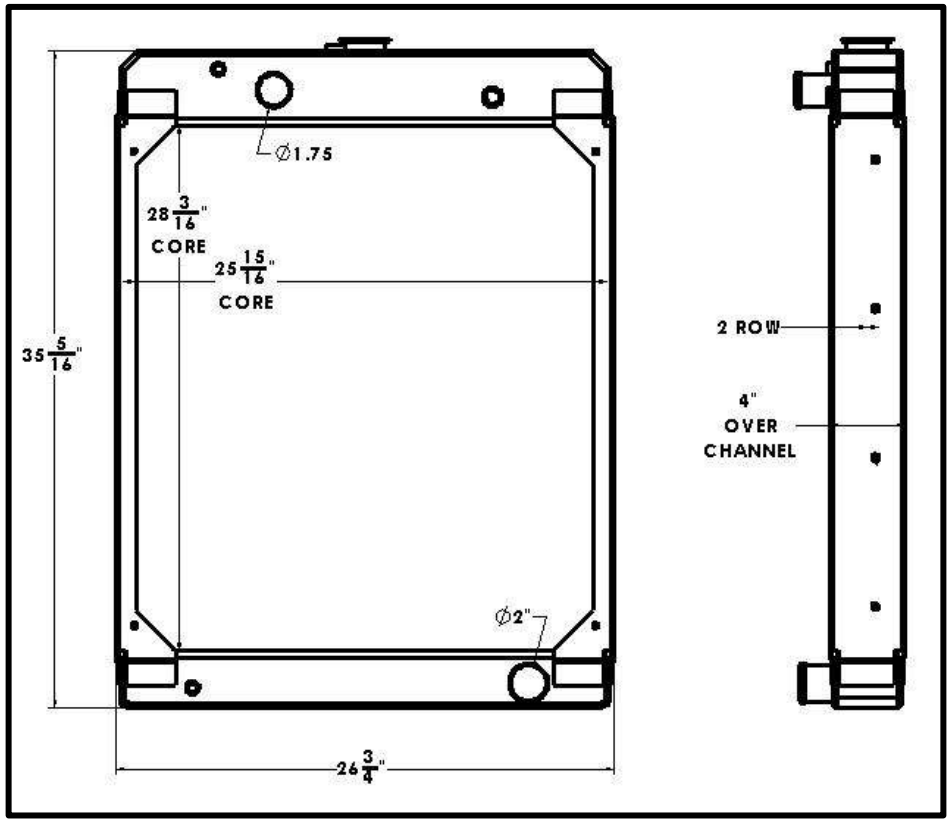

Overall Dimensions: 35-5/16” X 26-3/4” X 4”
Core: 28-3/16” X 25-15/16” X 2 ROW
Inlet: 1-3/4”OD
Outlet: 2”OD

ST169

Listed dimensions may vary slightly from OE

ST170

BGR Part Number: ST-0171-2VT-F
ONAN PART NUMBER 130-6171

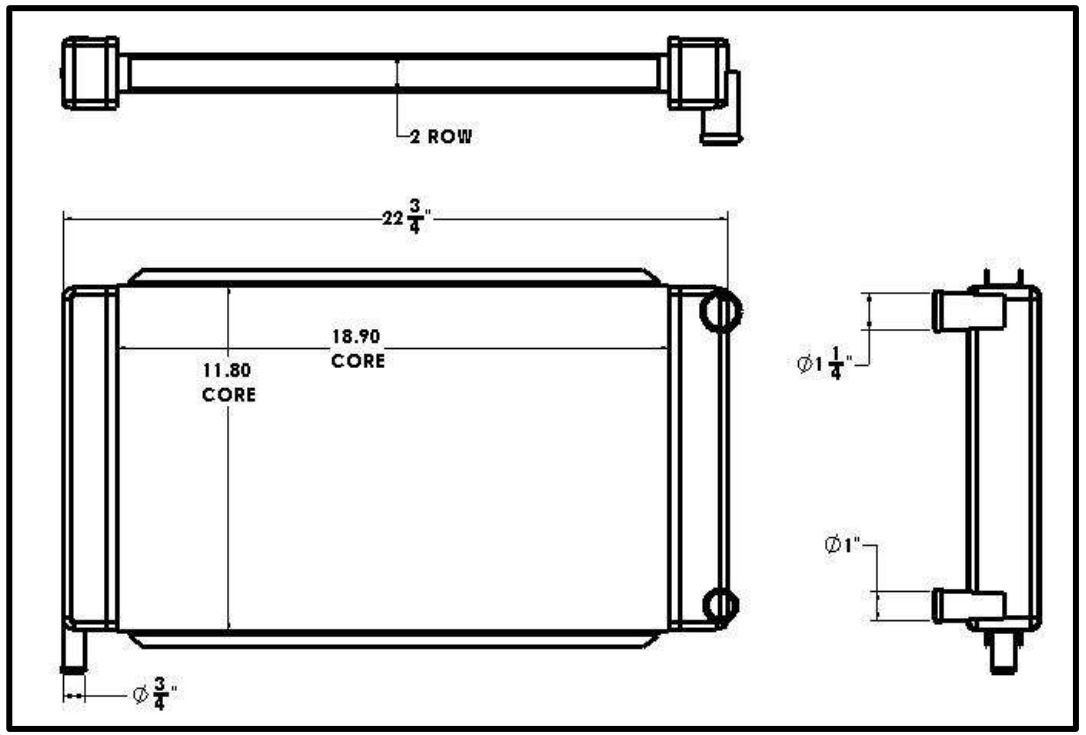

Overall Dimensions: 22-3/4” X 13” X 2-7/16”
Core: 19” X 12” X 2 ROW
Inlet: 1-3/4”OD
Outlet: 1”OD

Tel 1.800.774.2168
www.bgrradiator.com

BGR Part Number: ST-0172-5M-NC
RADIATOR SPEC 26305-C/B VERSION

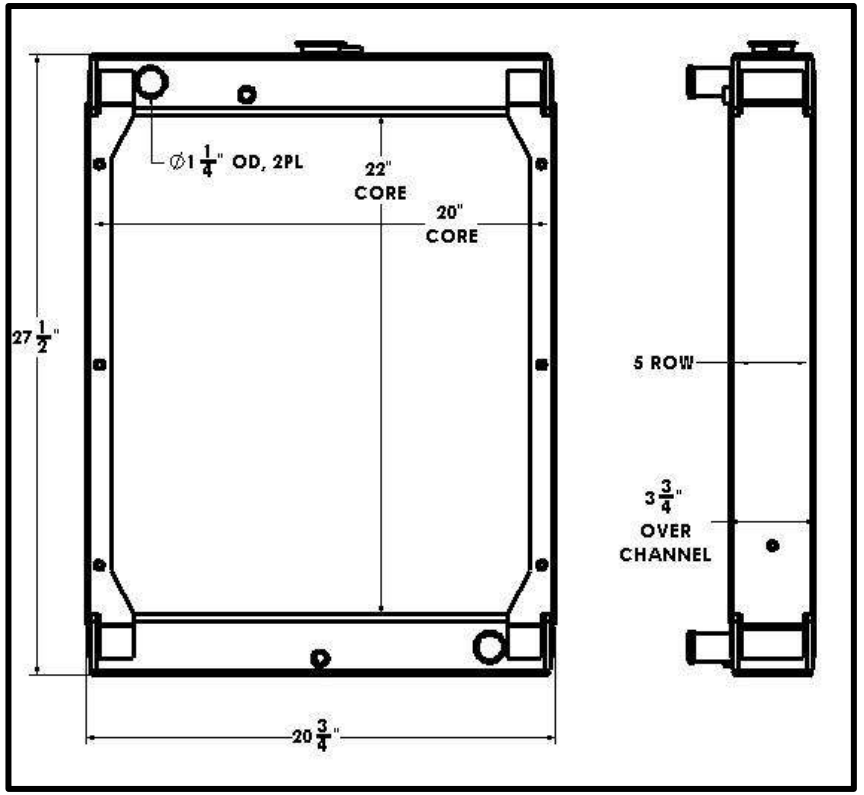

Overall Dimensions: 27-1/2” X 20-3/4” X 3-3/4”
Core: 22” X 20” X 5 ROW
Inlet: 1-1/4”OD
Outlet: 1-1/4”OD

Listed dimensions may vary slightly from OE

BGR Part Number: ST-0173-4M-TT
QUALITY COOLING 001875, DMT 50C

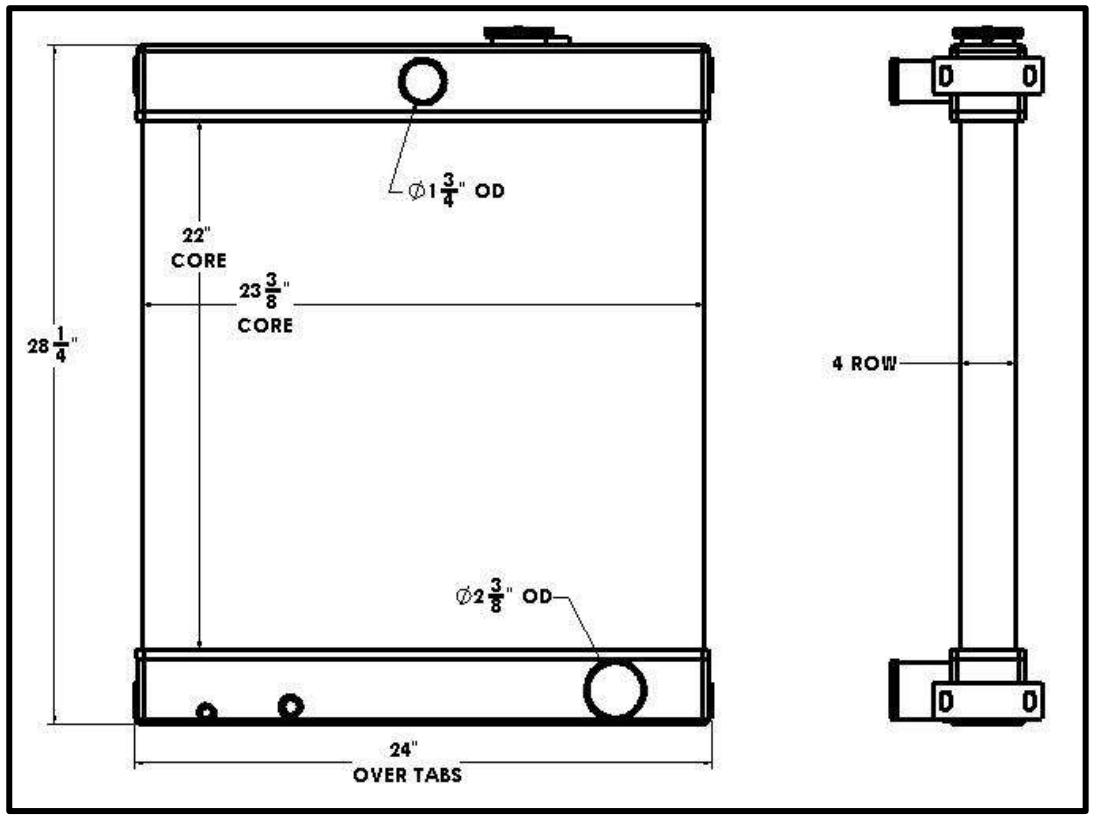

Overall Dimensions: 28-1/4” X 24” X 3-1/2”
Core: 22” X 23-3/8” X 4 ROW
Inlet: 1-3/4”OD
Outlet: 2-3/8”OD

Tel 1.800.774.2168
www.bgrradiator.com

BGR Part Number: ST-0174-3RT-B
ONAN 130-3552, 1A15278,190301

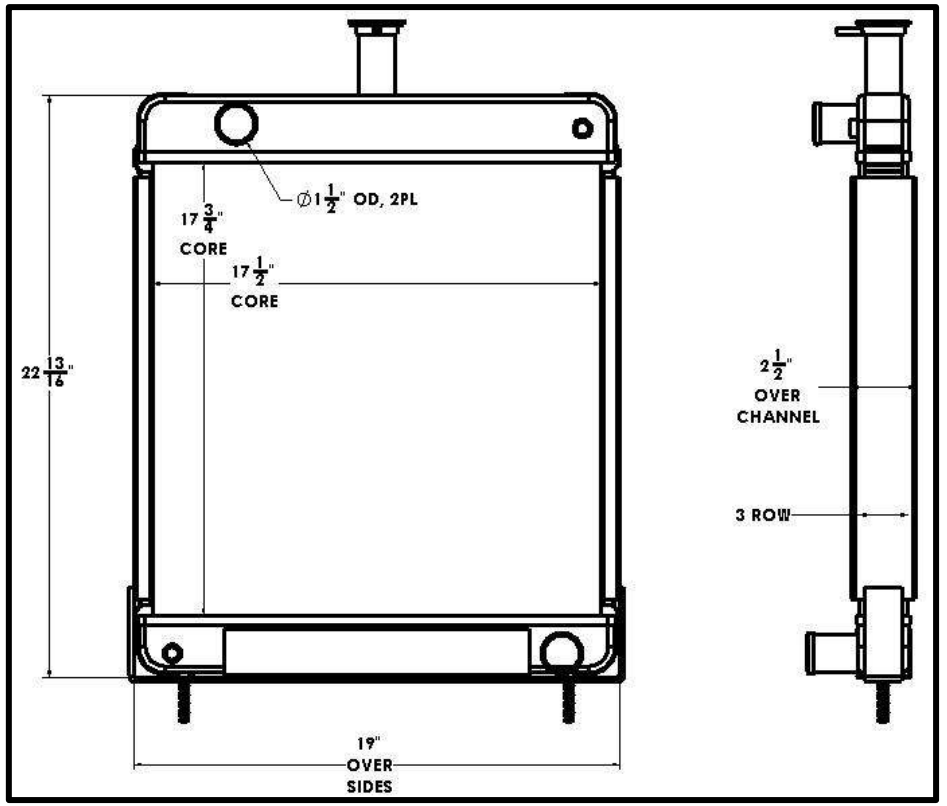

Overall Dimensions: 22-13/16” X 19” X 2-1/2”
Core: 17-3/4” X 17-1/2” X 3 ROW
Inlet: 1-1/2”OD
Outlet: 1-1/2”OD

Listed dimensions may vary slightly from OE

BGR Part Number: ST-0175-4J-NC
KATOLIGHT 70694

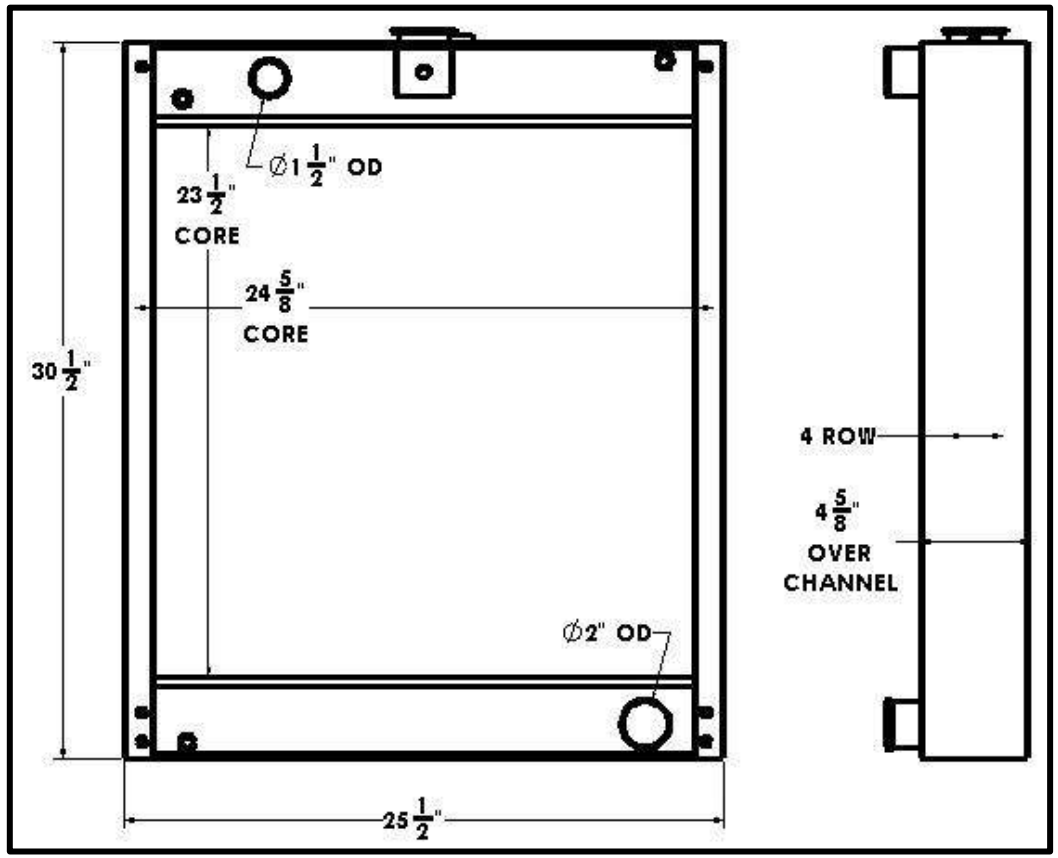

Overall Dimensions: 30-1/2” X 25-1/2” X 4-5/8”
Core: 23-1/2” X 24-5/8” X 4 ROW
Inlet: 1-1/2”OD
Outlet: 2”OD

Tel 1.800.774.2168
www.bgrradiator.com

BGR Part Number: ST-0176-5J-NC
MODINE 1A16529, A-276526

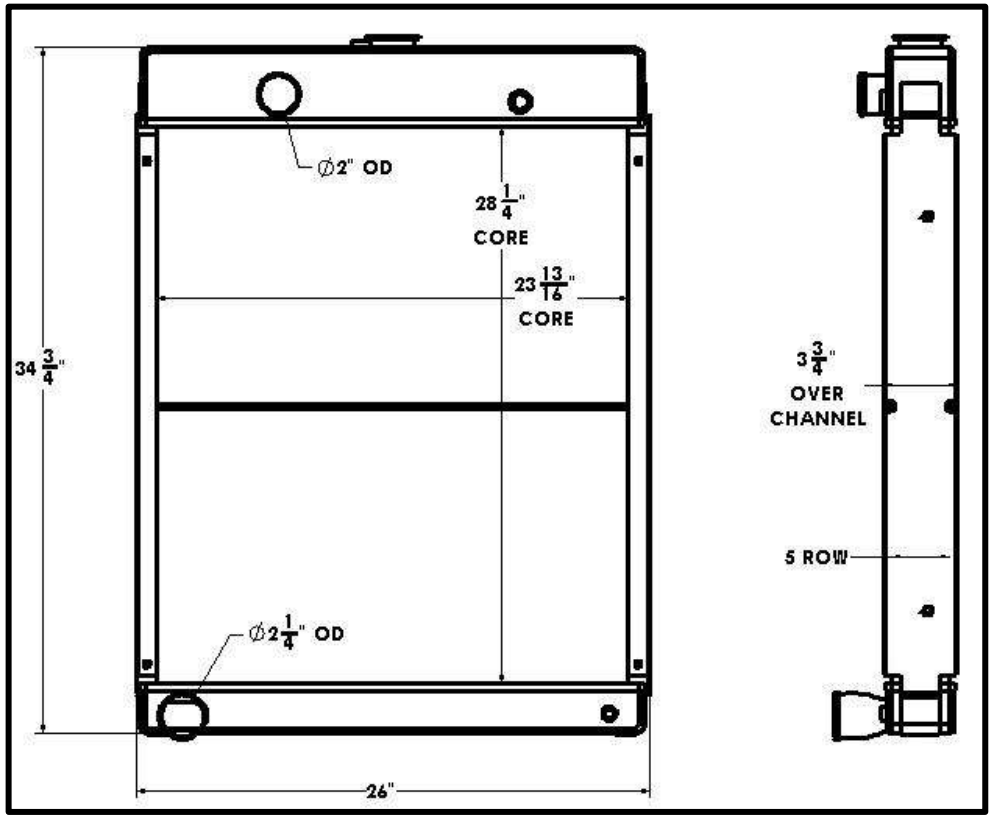

Overall Dimensions: 34-3/4” X 26” X 3-3/4”
Core: 28-1/4” X 23-13/16” X 5 ROW
Inlet: 2”OD
Outlet: 2-1/4”OD

Listed dimensions may vary slightly from OE

BGR Part Number: ST-0177-6T-NC
COPAR C241-039-0002-7, JOHN DEERE 624 LOADER

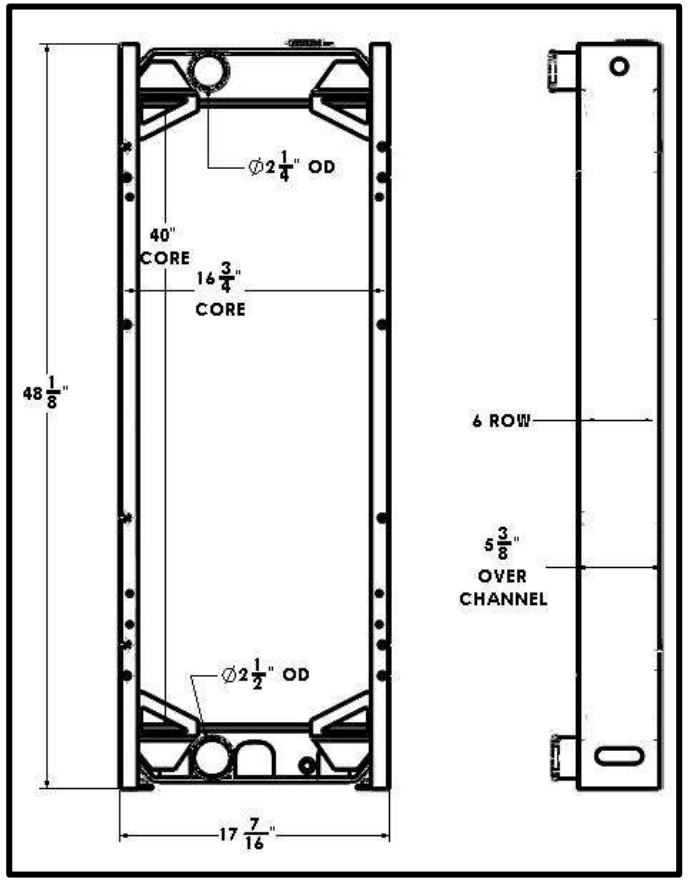

Overall Dimensions: 48-1/8” X 17-7/16” X 5-3/8”
Core: 40” X 16-3/4” X 6 ROW
Inlet: 2-1/4”OD
Outlet: 2-1/2”OD

Tel 1.800.774.2168
www.bgrradiator.com

BGR Part Number: ST-0178-5P-F
GENERAC OC1152

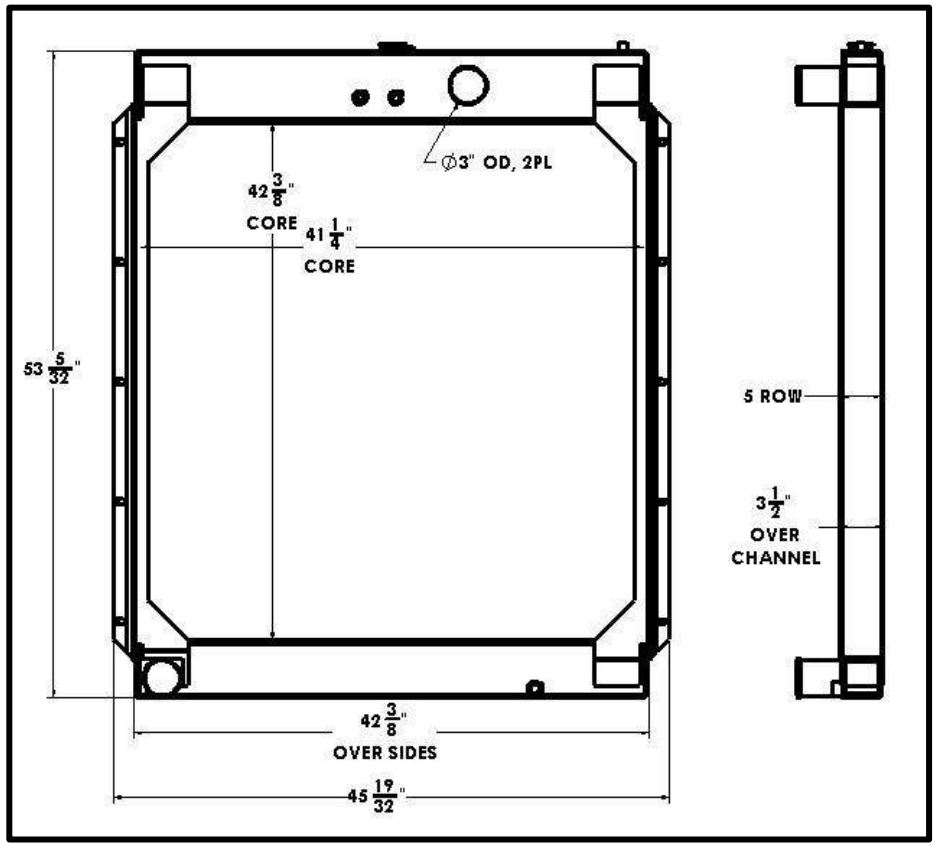

Overall Dimensions: 53-5/32” X 42-3/8” X 3-1/2”
Core: 42-3/8” X 41-1/4” X 5 ROW
Inlet: 3”OD
Outlet: 3”OD

Listed dimensions may vary slightly from OE

BGR Part Number: ST-0179-4R-F
ONAN 130-4359-02

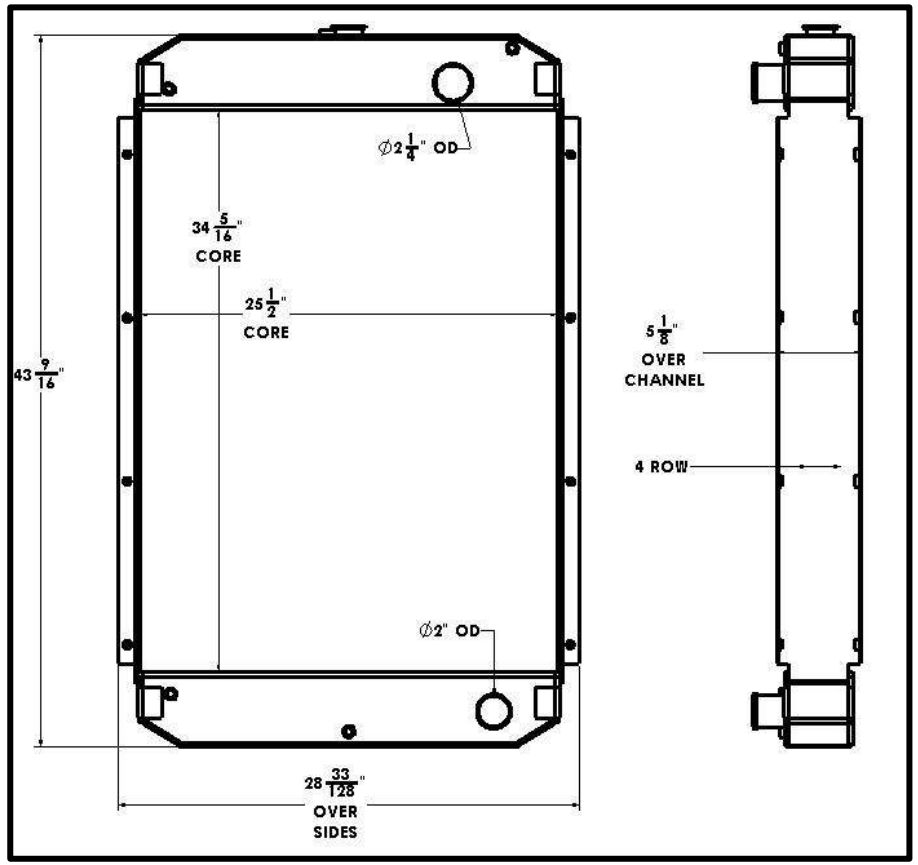

Overall Dimensions: 43-9/16” X 28-1/4” X 5-1/8”
Core: 34-5/16” X 25-1/2” X 4 ROW
Inlet: 2-1/4”OD
Outlet: 2”OD

Tel 1.800.774.2168
www.bgrradiator.com

BGR Part Number: ST-0180-3M-NC
ONAN 130-1551

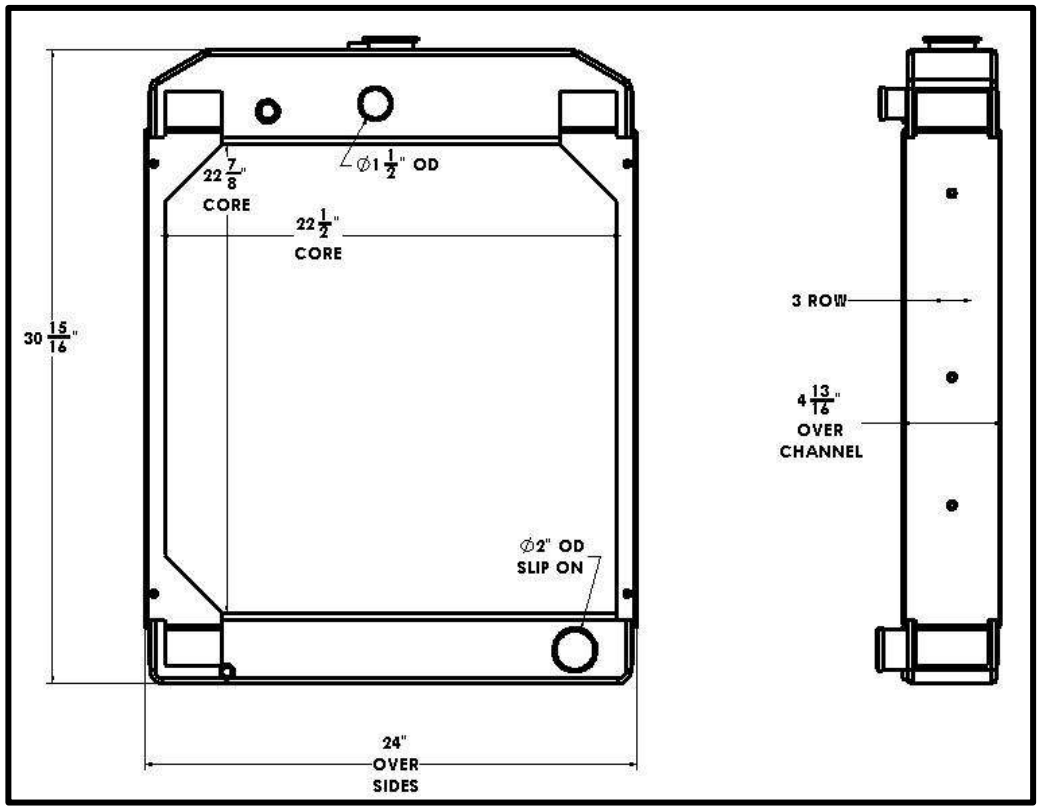

Overall Dimensions: 30-15/16” X 24” X 4-13/16”
Core: 22-7/8” X 22-1/2” X 3 ROW
Inlet: 1-1/2”OD
Outlet: 2”OD

Listed dimensions may vary slightly from OE

BGR Part Number: ST-0181-4VT-F
INGERSOLL RAND 36889772

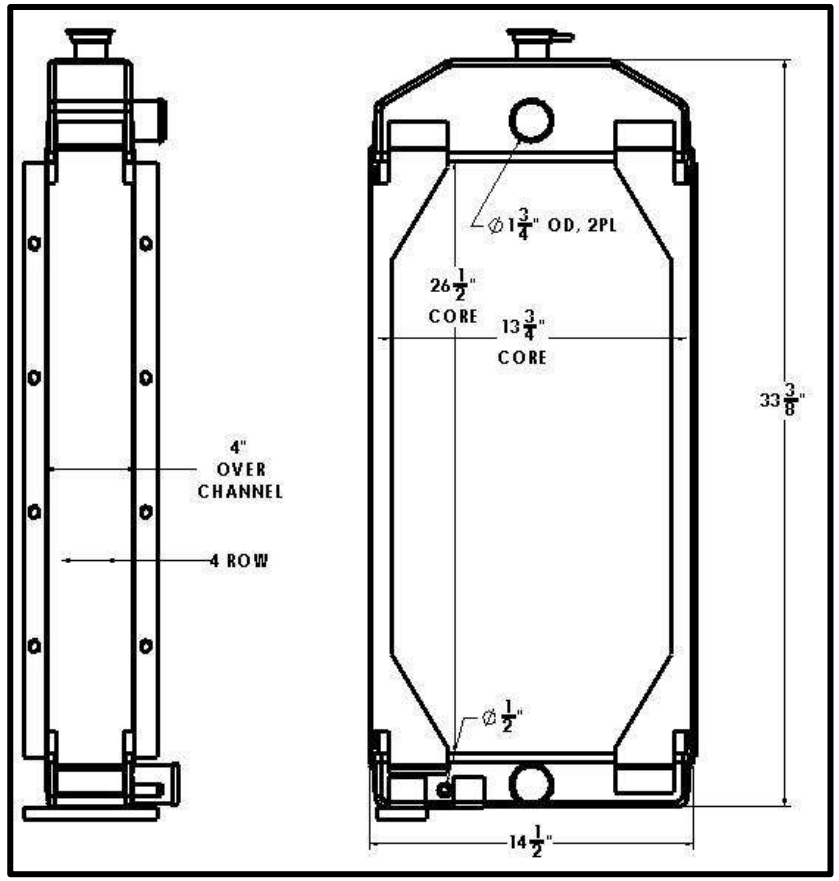

Overall Dimensions: 33-3/8” X 14-1/2” X 4”
Core: 26-1/2” X 13-3/4” X 4 ROW
Inlet: 1-3/4”OD
Outlet: 1-3/4”OD

Tel 1.800.774.2168
www.bgrradiator.com

BGR Part Number: ST-0182-6M-NC
RADIATOR SPECIALTIES RS7590, DENYO GEN

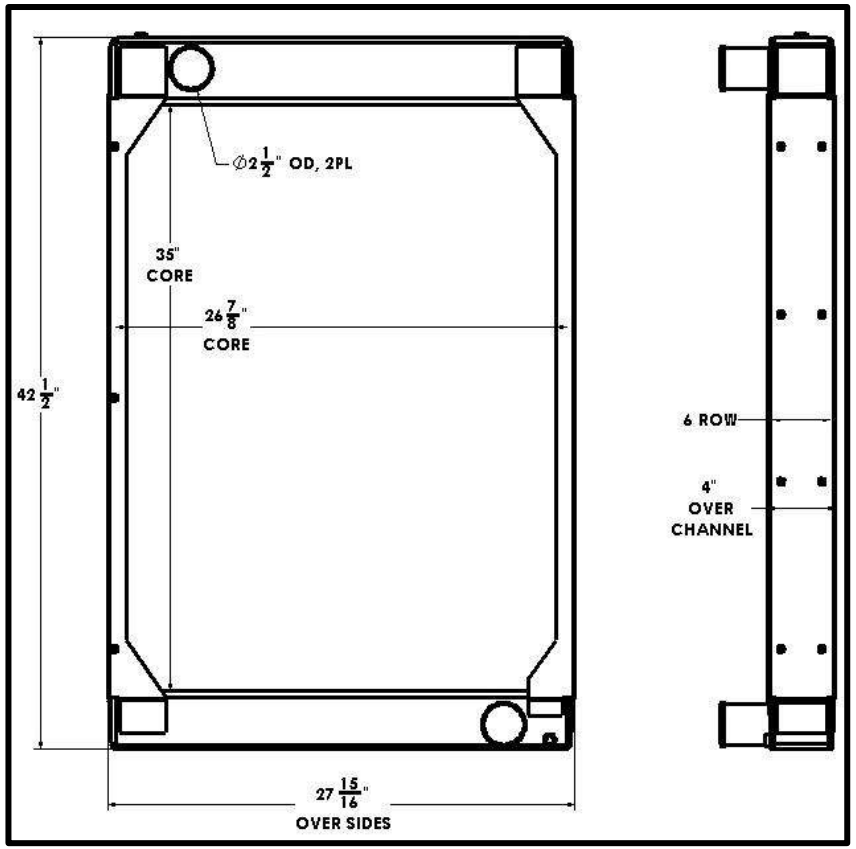

Overall Dimensions: 42-1/2” X 27-15/16” X 4”
Core: 35” X 26-7/8” X 6 ROW
Inlet: 2-1/2”OD
Outlet: 2-1/2”OD

Listed dimensions may vary slightly from OE

BGR Part Number: ST-0183-5P-F
SAMSUNG 130SE EXCAVATOR

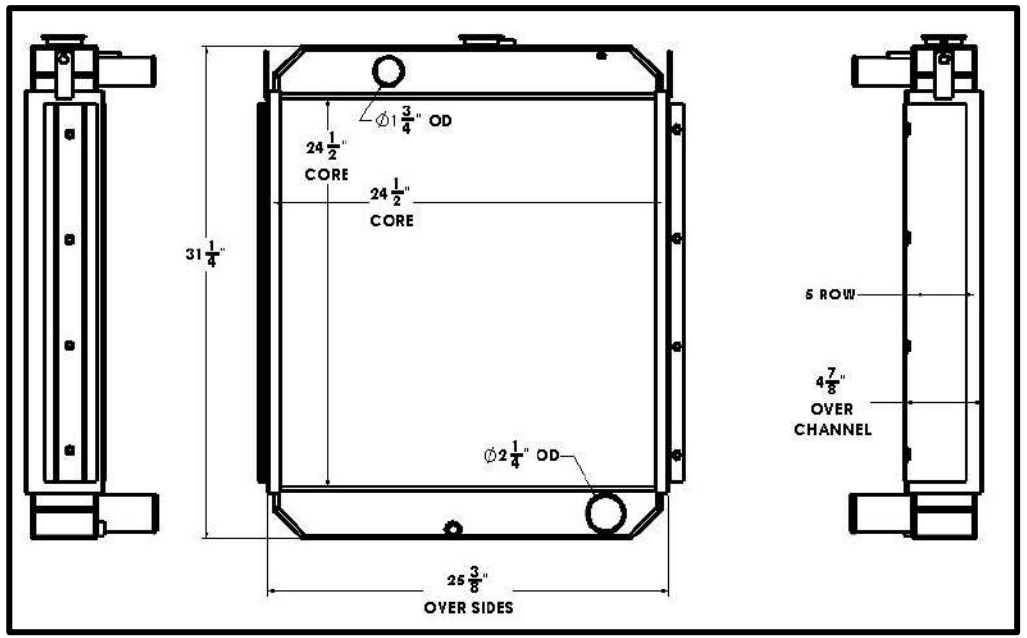

Overall Dimensions: 31-1/4” X 25-3/8” X 4-7/8”
Core: 24-1/2” X 24-1/2” X 5 ROW
Inlet: 1-3/4”OD
Outlet: 2-1/4”OD

Tel 1.800.774.2168
www.bgrradiator.com

BGR Part Number: ST-0184-3R-F
ONAN 130-4359-01

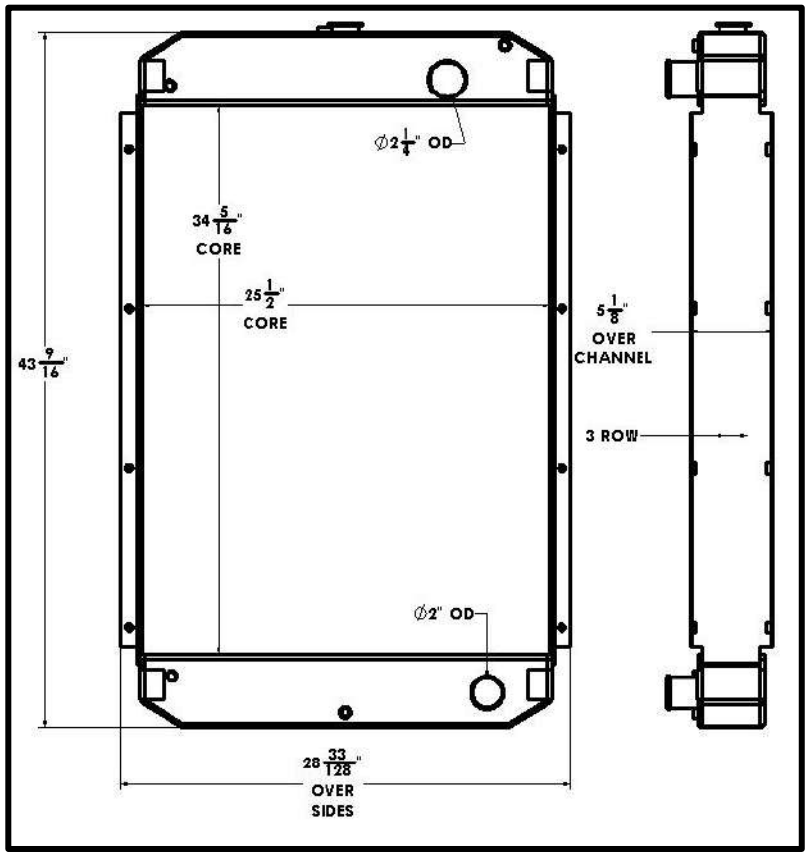

Overall Dimensions: 43-9/16” X 28-1/4” X 5-1/8”
Core: 34-5/16” X 25-1/2” X 3 ROW
Inlet: 2-1/4”OD
Outlet: 2”OD

Listed dimensions may vary slightly from OE

BGR Part Number: ST-0185-4R-F
ONAN 130-4359-03

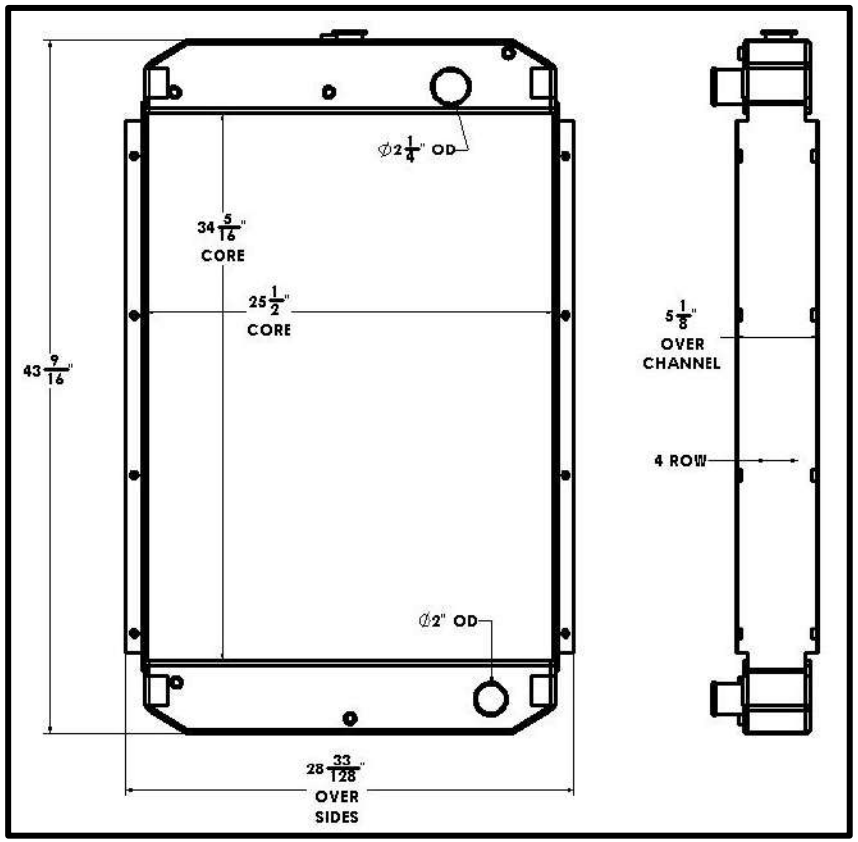

Overall Dimensions: 43-9/16” X 28-1/4” X 5-1/8”
Core: 34-5/16” X 25-1/2” X 4 ROW
Inlet: 2-1/4”OD
Outlet: 2”OD

Tel 1.800.774.2168
www.bgrradiator.com

BGR Part Number: ST-0186-4M-NC
CUMMINS POWER UNIT, DUST COLLECTOR

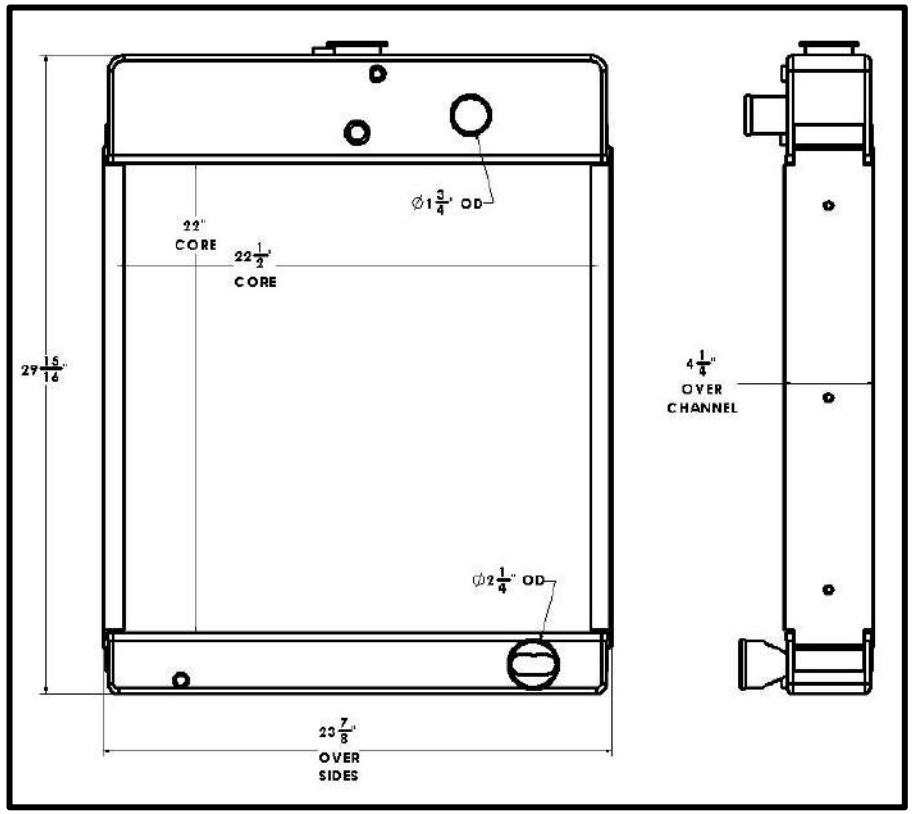

Overall Dimensions: 29-15/16” X 23-7/8” X 4-1/4”
Core: 22” X 22-1/2” X 4 ROW
Inlet: 1-3/4”OD
Outlet: 2-1/4”OD

Listed dimensions may vary slightly from OE

BGR Part Number: ST-0187-4VT-EF
INGERSOLL RAND GENERATOR

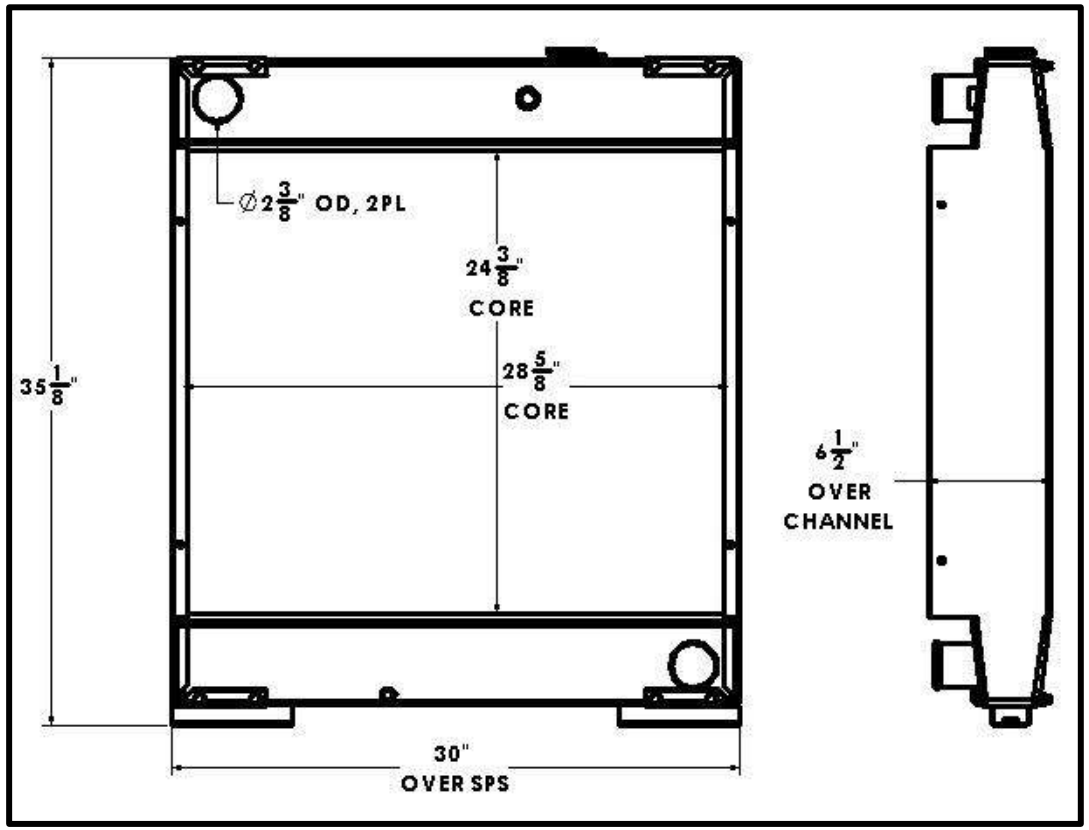

Overall Dimensions: 35-1/8” X 30” X 6-1/2”
Core: 24-3/8” X 28-5/8” X 4 ROW
Inlet: 2-3/8”OD
Outlet: 2-3/8”OD

Tel 1.800.774.2168
www.bgrradiator.com

BGR Part Number: ST-0188-5M-NC
JOHN DEERE 544 LOADER AT223881

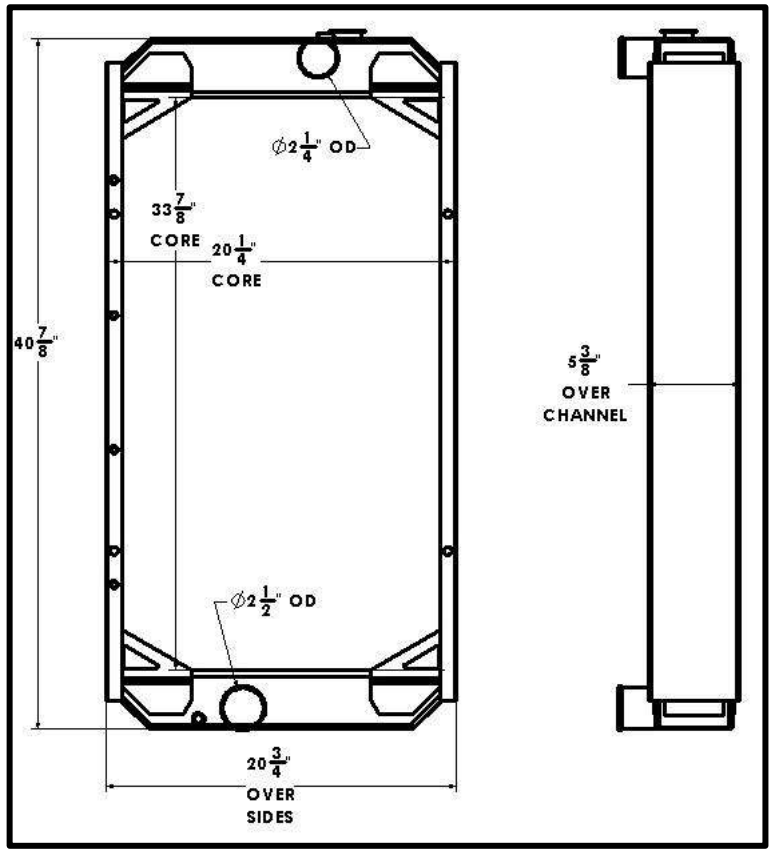

Overall Dimensions: 40-7/8” X 20-3/4” X 5-3/8”
Core: 33-7/8” X 20-1/4” X 5 ROW
Inlet: 2-1/4”OD
Outlet: 2-1/2”OD

Listed dimensions may vary slightly from OE

BGR Part Number: ST-0189-7M-NC
JD 644G LOADER COPAR AT158071, AT177176

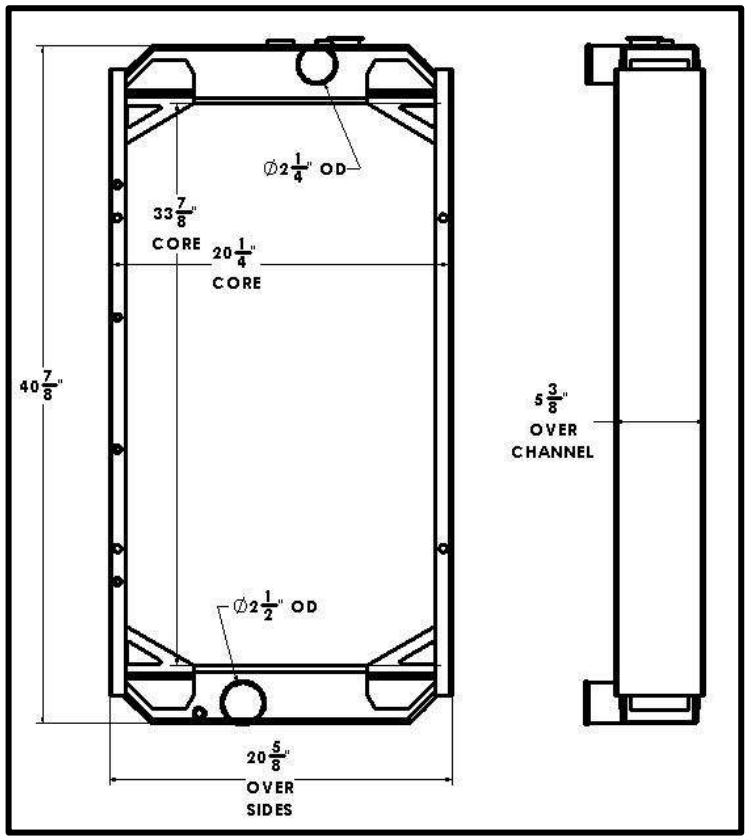

Overall Dimensions: 40-7/8” X 20-3/4” X 5-3/8”
Core: 33-7/8” X 20-1/4” X 7 ROW
Inlet: 2-1/4”OD
Outlet: 2-1/2”OD

Tel 1.800.774.2168
www.bgrradiator.com

BGR Part Number: ST-0190-5M-F
CATERPILLAR 9Y5936, 1A14573

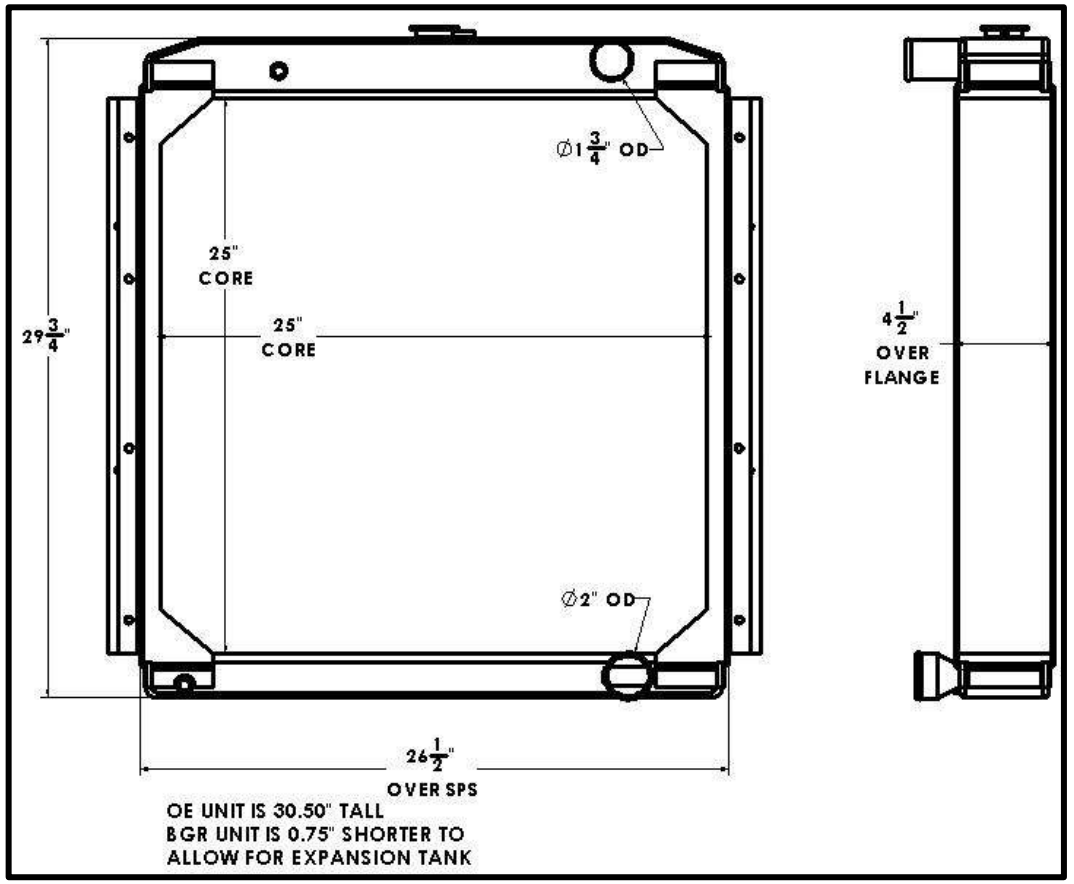

Overall Dimensions: 29-3/4” X 26-1/2” X 4-1/2”
Core: 25” X 25” X 5 ROW
Inlet: 1-3/4”OD
Outlet: 2”OD

Listed dimensions may vary slightly from OE

BGR Part Number: ST-0191-6N-NC
VOLVO 11110137

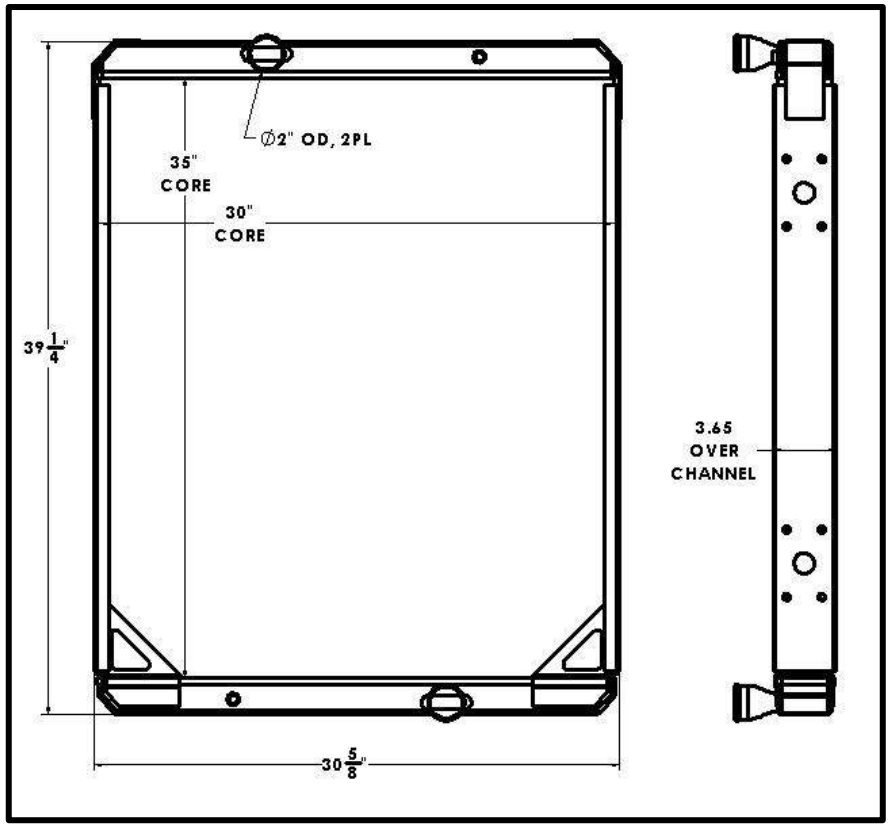

Overall Dimensions: 39-1/4” X 30-5/8” X 3-5/8”
Core: 35” X 30” X 6 ROW
Inlet: 2”OD
Outlet: 2”OD

Tel 1.800.774.2168
www.bgrradiator.com

BGR Part Number: ST-0192-2VTR-F
GENERAC OF2608A

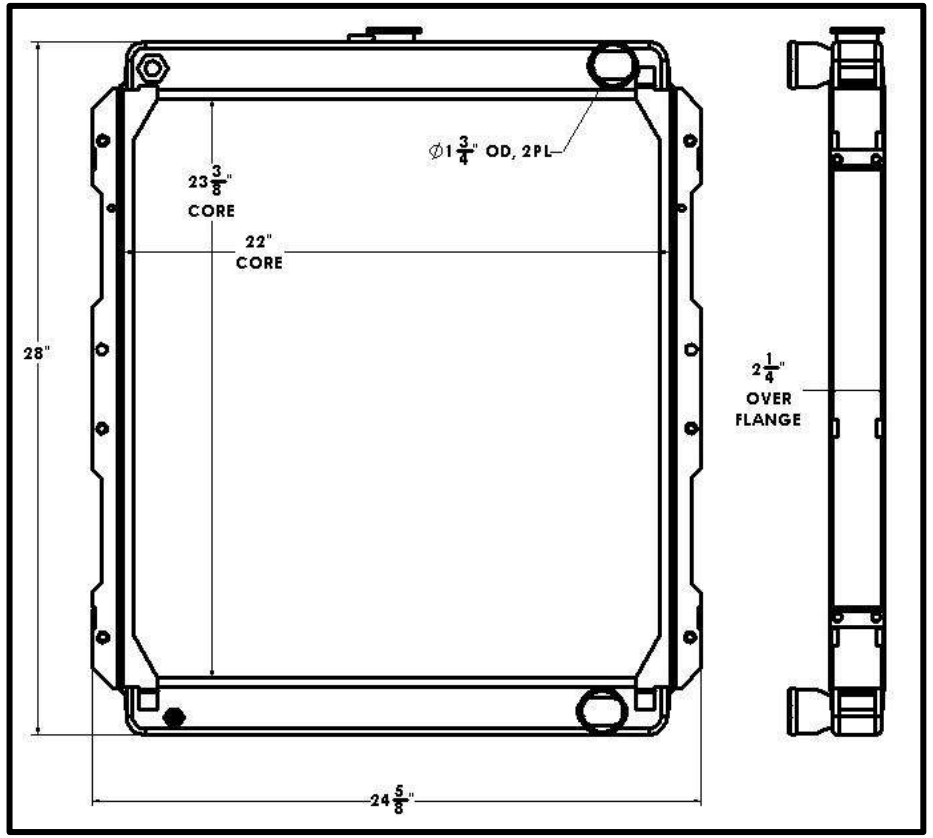

Overall Dimensions: 28” X 24-5/8” X 2-1/4”
Core: 23-3/8” X 22” X 2 ROW
Inlet: 1-3/4”OD
Outlet: 1-3/4”OD

ST191

Listed dimensions may vary slightly from OE

ST192

BGR Part Number: ST-0193-4R-NC

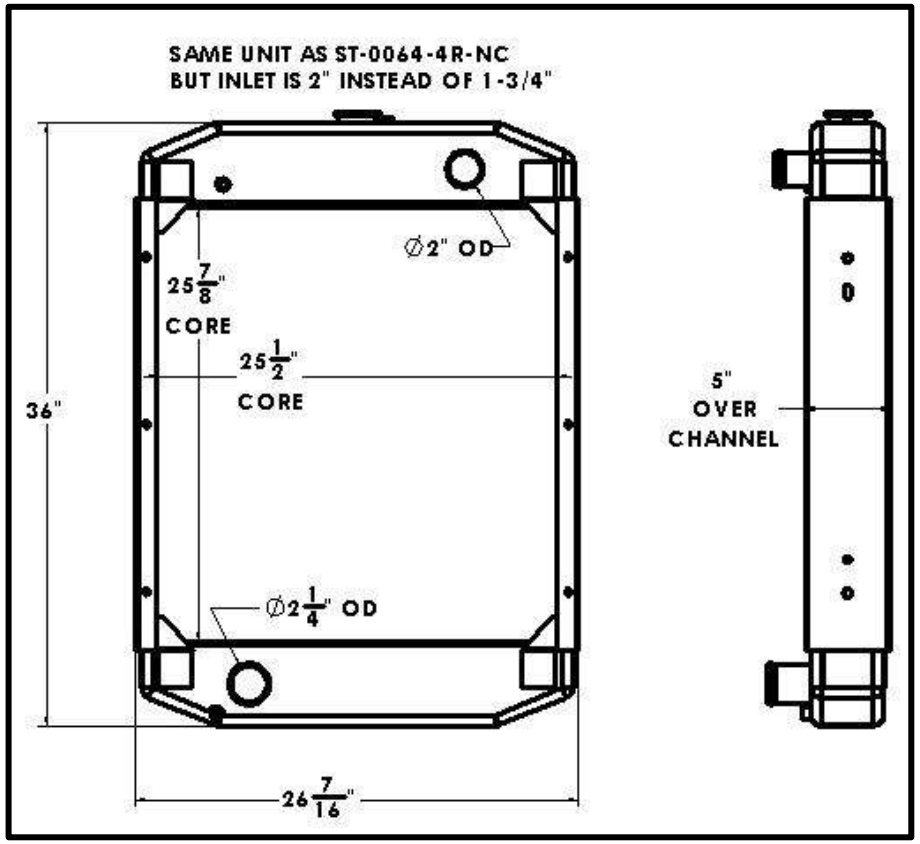

Overall Dimensions: 36” X 26-7/16” X 5”
Core: 25-7/8” X 25-1/2” X 4 ROW
Inlet: 2”OD
Outlet: 2-1/4”OD

Tel 1.800.774.2168
www.bgrradiator.com

BGR Part Number: ST-0194-5T-B
PGL 12000240, REV E

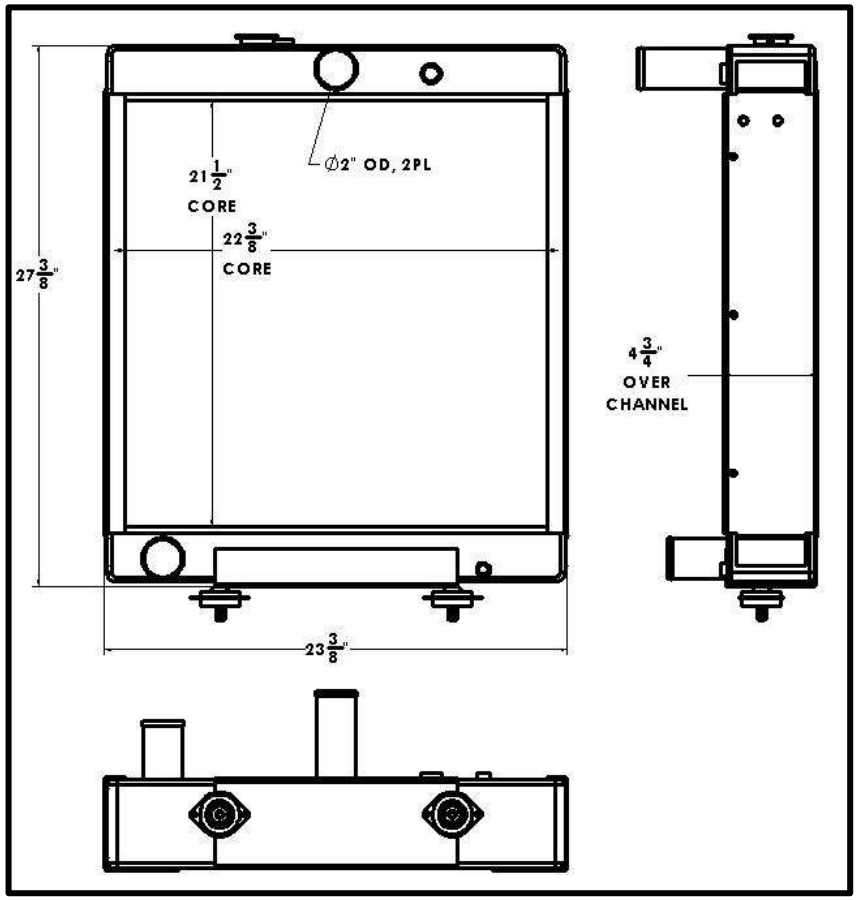

Overall Dimensions: 27-3/8” X 23-3/8” X 4-3/4”
Core: 21-1/2” X 22-3/8” X 5 ROW
Inlet: 2”OD
Outlet: 2”OD

Listed dimensions may vary slightly from OE

BGR Part Number: ST-0195-4RT-EF
3E0102450000

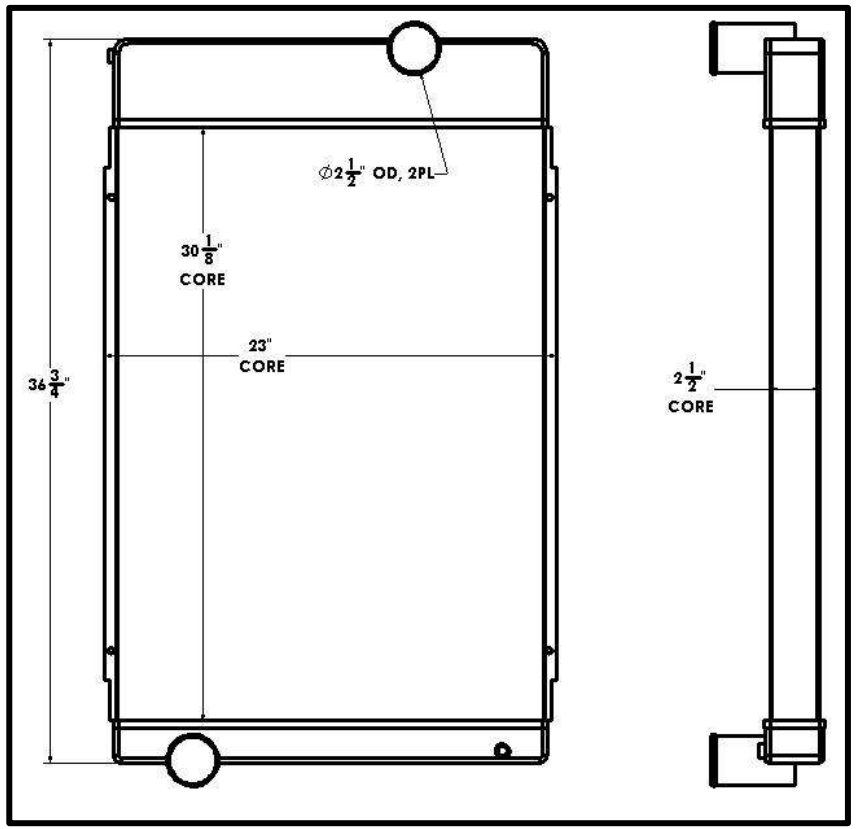

Overall Dimensions: 36-3/4” X 23” X 2-5/8”
Core: 30-1/8” X 23” X 4 ROW
Inlet: 2-1/2”OD
Outlet: 2-1/2”OD

Tel 1.800.774.2168
www.bgrradiator.com

BGR Part Number: ST-0196-6M-F
ONAN 130-0429

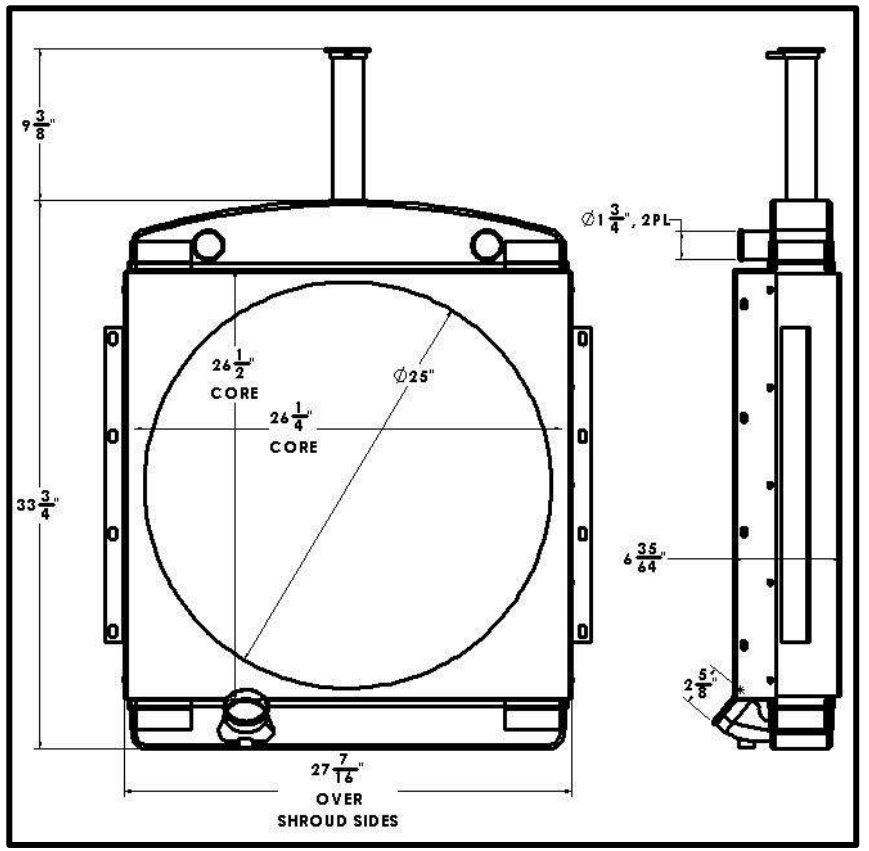

Overall Dimensions: 33-3/4” X 27-7/16” X 6-35/64”
Core: 26-1/2” X 26-1/4” X 6 ROW
Inlet: 1-3/4”OD 2 PLACES
Outlet: 2-5/8”OD

Listed dimensions may vary slightly from OE

BGR Part Number: ST-0197-3RT-EF
3E0102450000

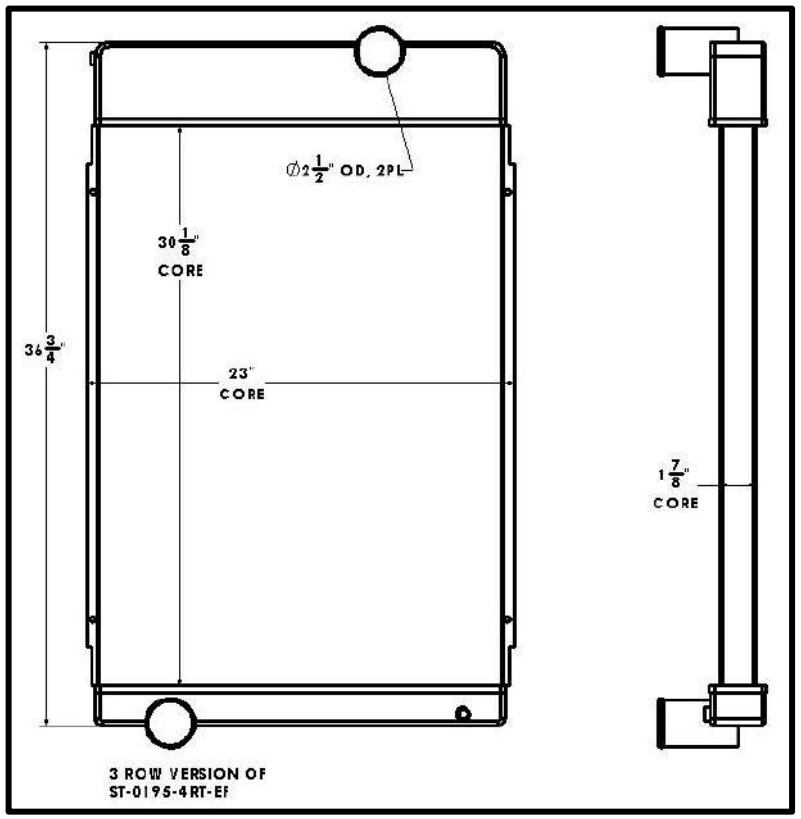

Overall Dimensions: 36-3/4” X 23” X 2-5/8”
Core: 30-1/8” X 23” X 3 ROW
Inlet: 2-1/2”OD
Outlet: 2-1/2”OD

Tel 1.800.774.2168
www.bgrradiator.com

BGR Part Number: ST-0198-5M-NC
PERFEX 209336A, SUPERIOR 30R131

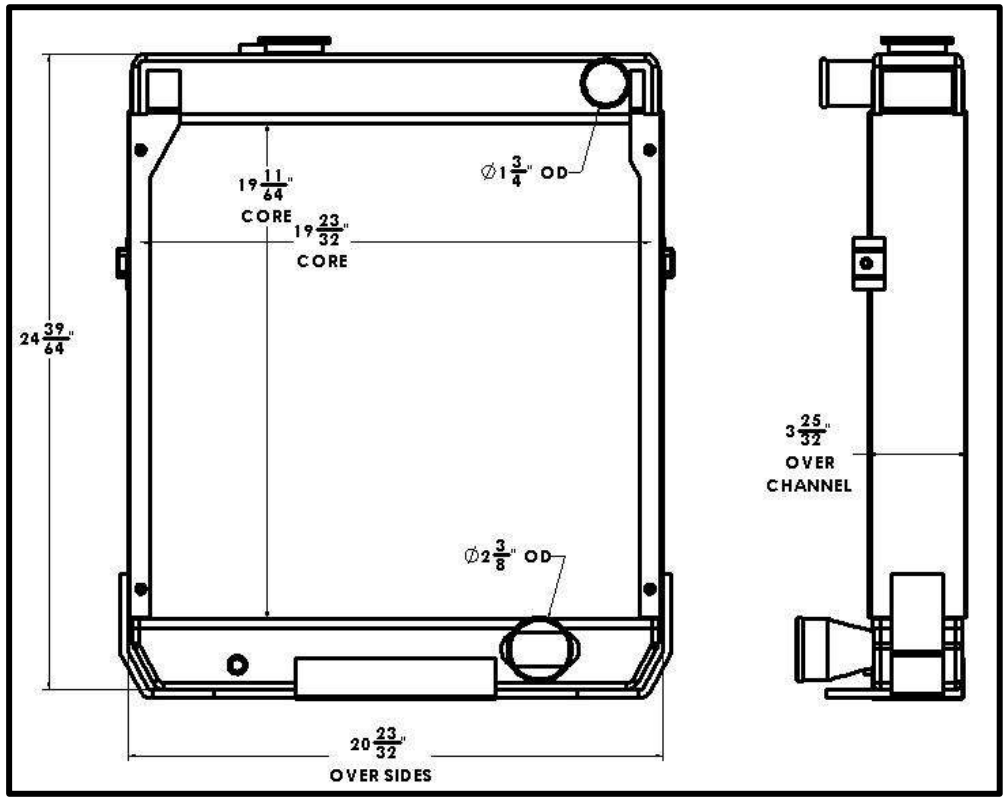

Overall Dimensions: 24-39/64” X 20-23/32” X 3-25/32”
Core: 19-11/64” X 19-23/32” X 5 ROW
Inlet: 1-3/4”OD
Outlet: 2-3/8”OD

Listed dimensions may vary slightly from OE

BGR Part Number: ST-0199-6I-NC
RADIATOR SPECIALTIES(GM20534-RAD ONLY)

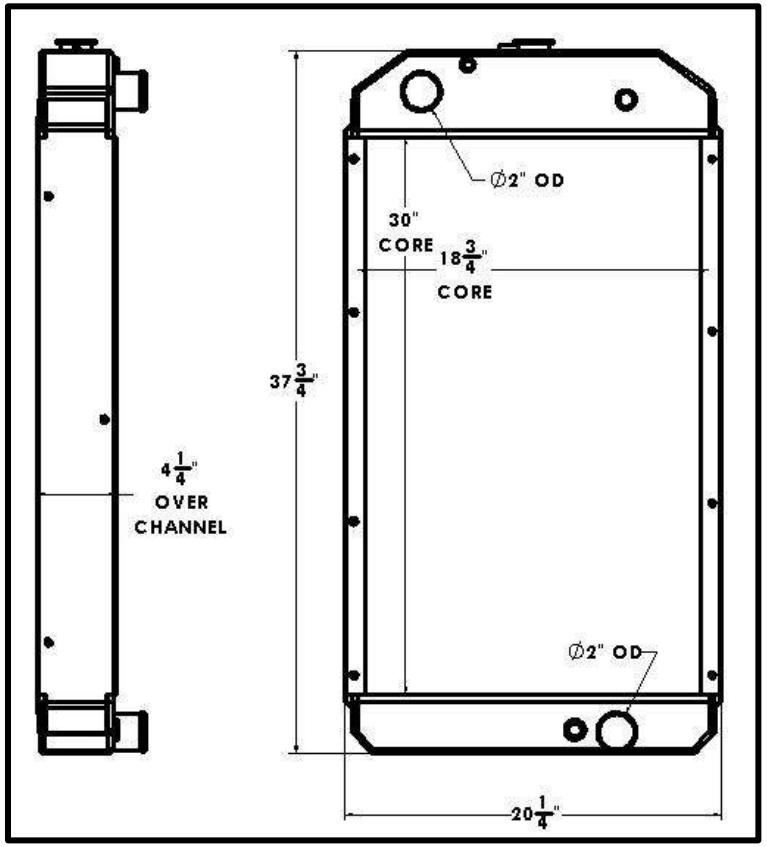

Overall Dimensions: 37-3/4” X 20-1/4” X 4-1/2”
Core: 30” X 18/-3/4” X 6 ROW
Inlet: 2”OD
Outlet: 2”OD

Tel 1.800.774.2168
www.bgrradiator.com

BGR Part Number: ST-0200-3VTW-F
GENERAC 087871A, MODINE 1A16309, 1A17715

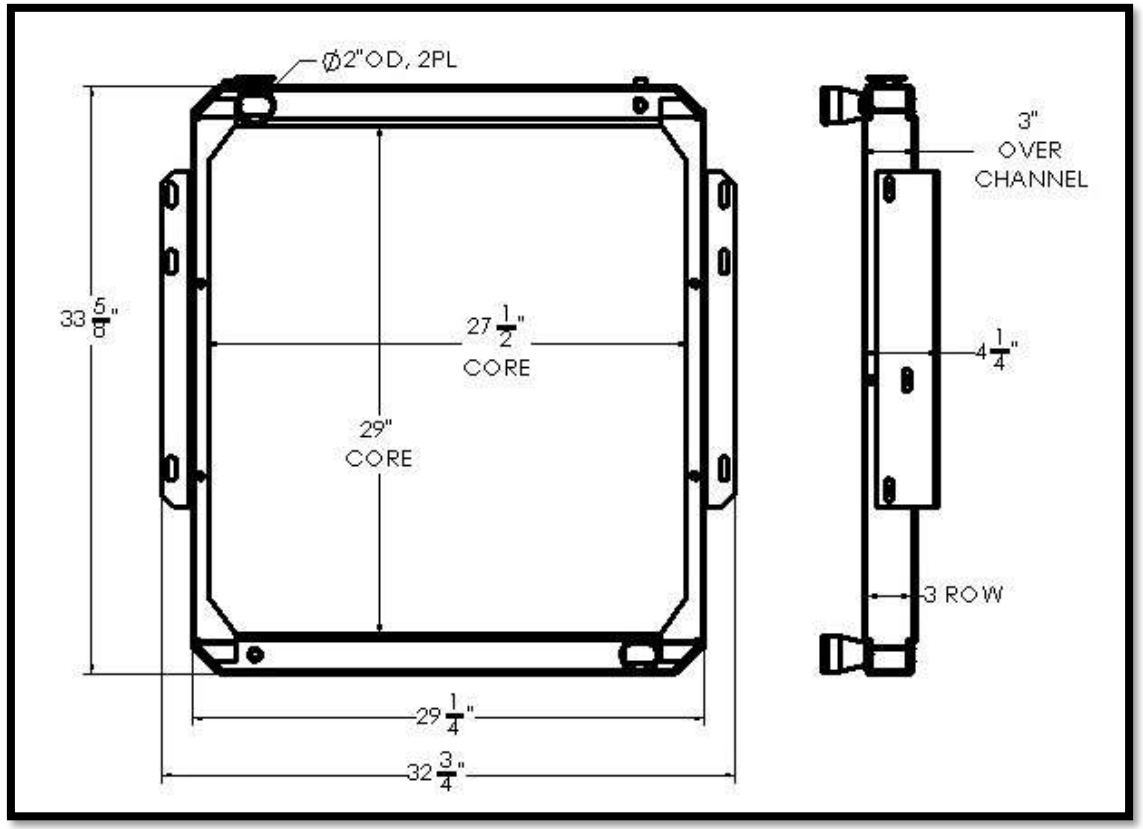

Overall Dimensions: 33-5/8” X 29-1/4” X 3”
Core: 29” X 27-1/2” X 3 ROW
Inlet: 2”OD
Outlet: 2”OD

Listed dimensions may vary slightly from OE

BGR Part Number: ST-0201-5I-F

ONAN 130-0604, 130-4267, 130-4361 MODINE 1A11508

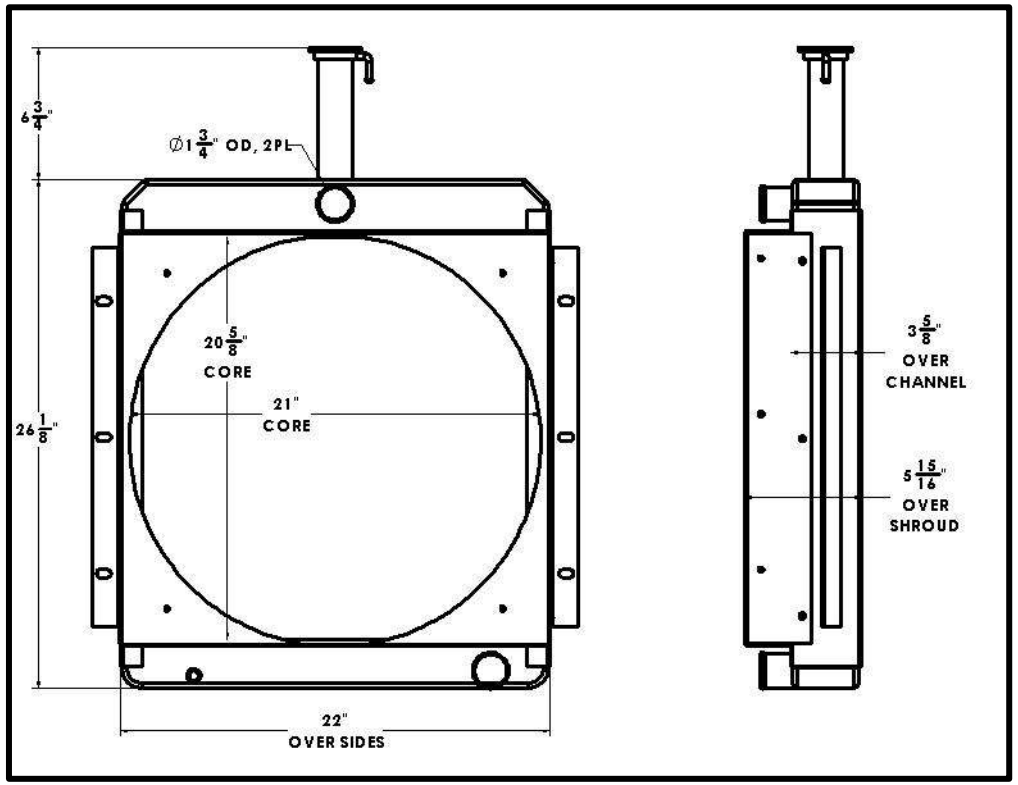

Overall Dimensions: 26-1/8” X 22” X 3-5/8”

Core: 20-5/8” X 21” X 5 ROW

Inlet: 1-3/4”OD

Outlet: 1-3/4”OD

Tel 1.800.774.2168

www.bgrradiator.com

BGR Part Number: ST-0202-5I-B

75kW Fermont M9, D3400T X264, spec A82754BB

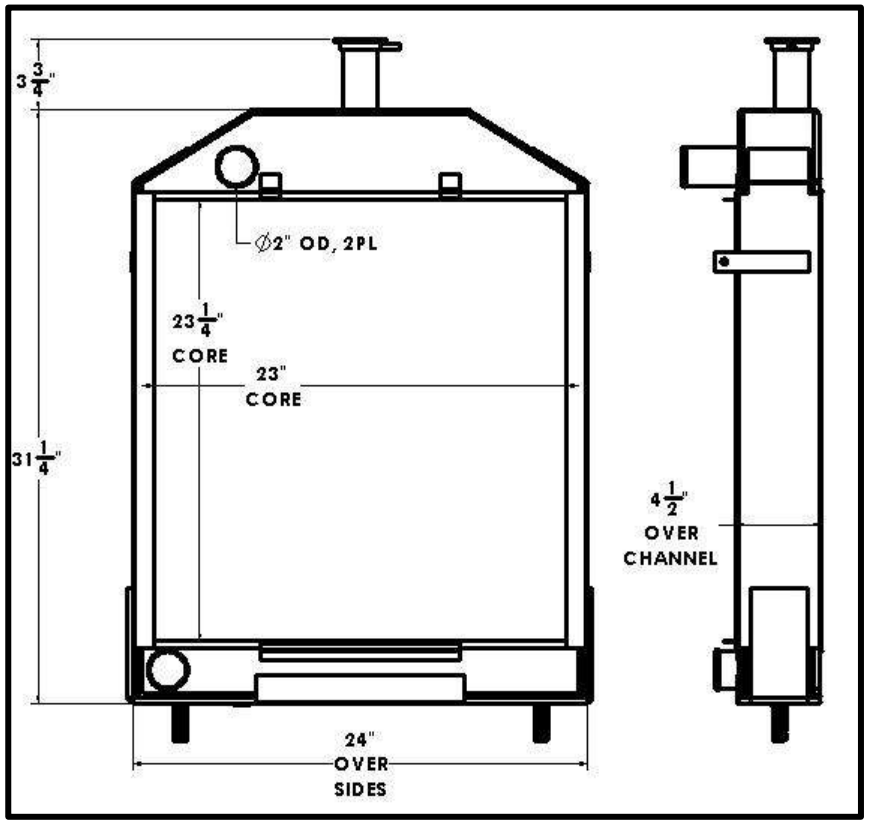

Overall Dimensions: 31-1/4” X 24” X 4-1/2”

Core: 23-1/4” X 23” X 5 ROW

Inlet: 2”OD

Outlet: 2”OD

Listed dimensions may vary slightly from OE

BGR Part Number: ST-0203-4M-F
ONAN PART NUMBER 130-0817

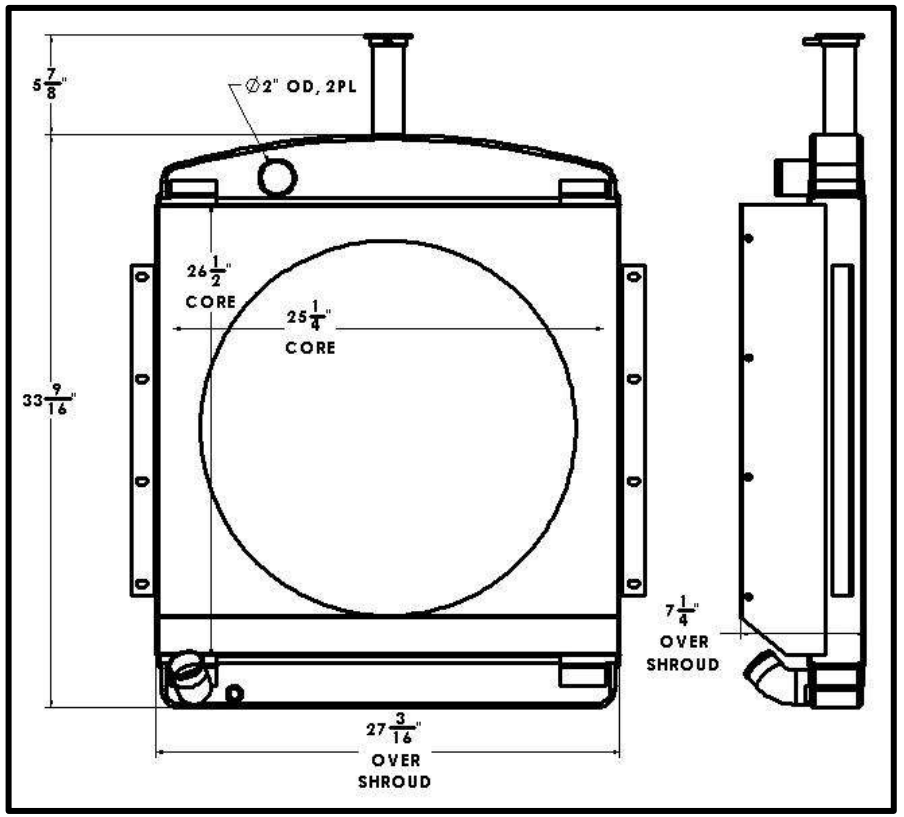

Overall Dimensions: 33-9/16” X 27-3/16” X 7-1/4”
Core: 26-1/2” X 25-1/4” X 4 ROW
Inlet: 2”OD
Outlet: 2”OD

Tel 1.800.774.2168
www.bgrradiator.com

BGR Part Number: ST-0204-5X-NC
STUART RADIATOR 810132

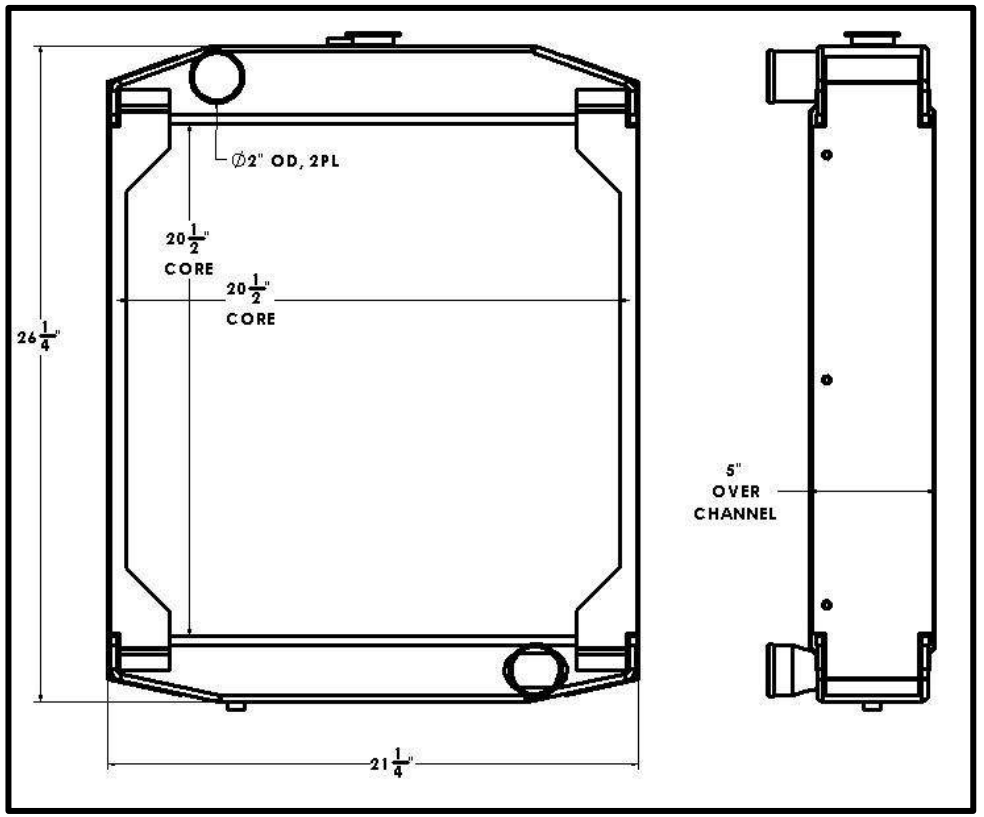

Overall Dimensions: 26-1/4” X 21-1/4” X 5”
Core: 20-1/2” X 20-1/2” X 5 ROW
Inlet: 2”OD
Outlet: 2”OD

Listed dimensions may vary slightly from OE

BGR Part Number: ST-0205-7I-EF

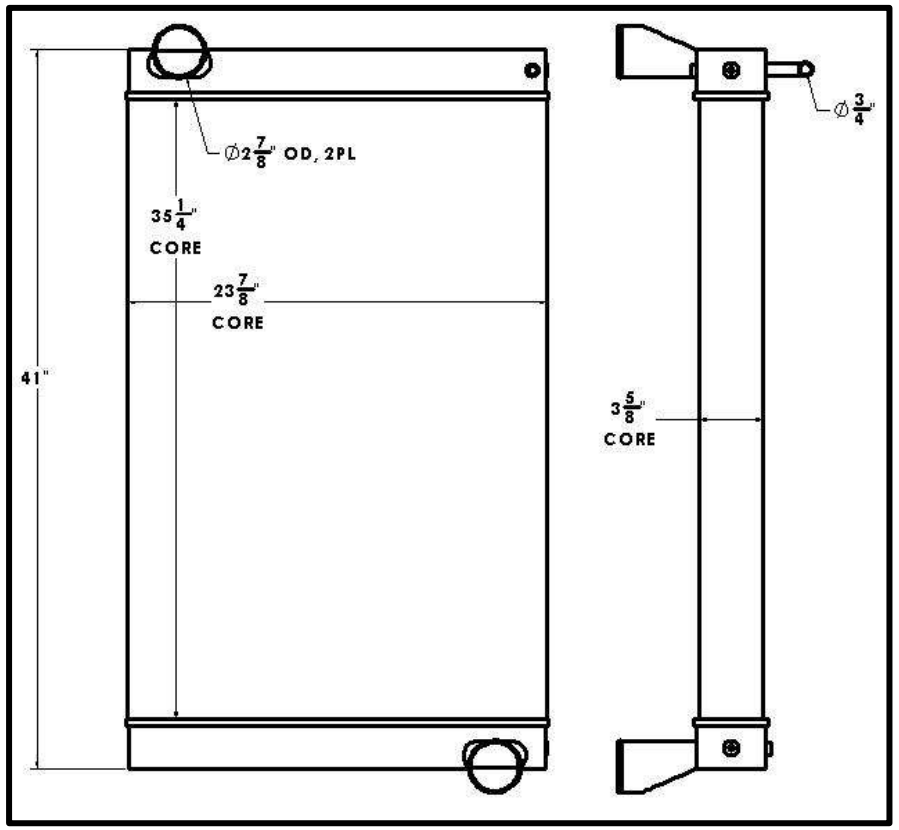

Overall Dimensions: 41” X 24” X 3-5/8”
Core: 35-1/4” X 23-7/8” X 7 ROW
Inlet: 2-7/8”OD
Outlet: 2-7/8”OD

Tel 1.800.774.2168
www.bgrradiator.com

BGR Part Number: ST-0206-5I-F
11213458, 181471

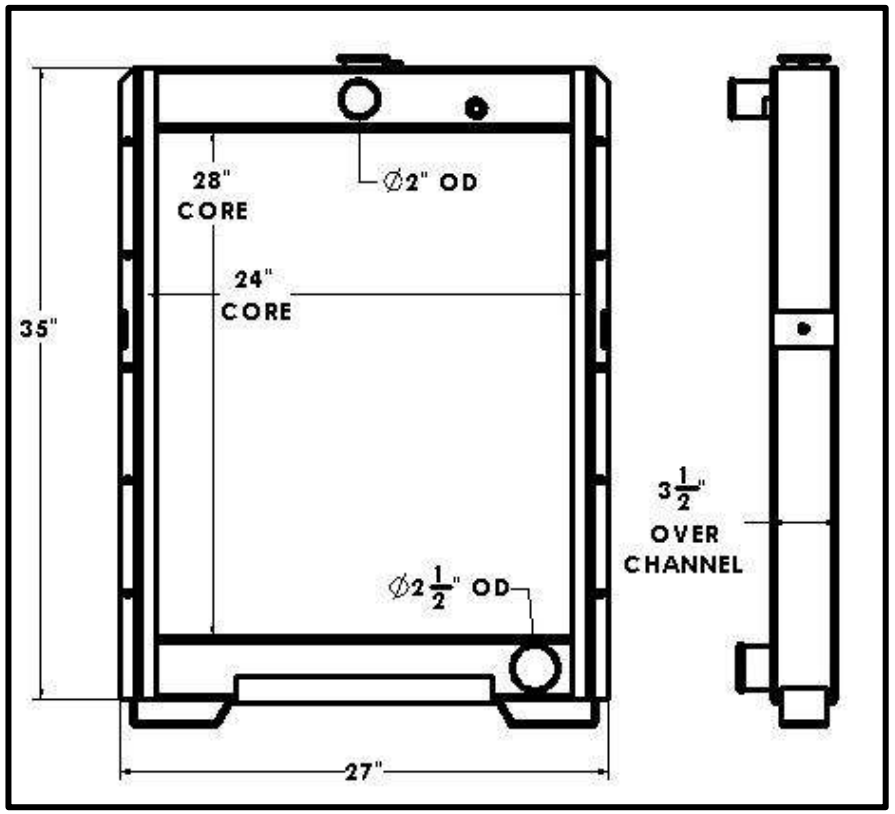

Overall Dimensions: 35” X 27” X 3-1/2”
Core: 28” X 24” X 5 ROW
Inlet: 2”OD
Outlet: 2-1/2”OD

Listed dimensions may vary slightly from OE

BGR Part Number: ST-0207-3VT-NC
KOHLER A-273412

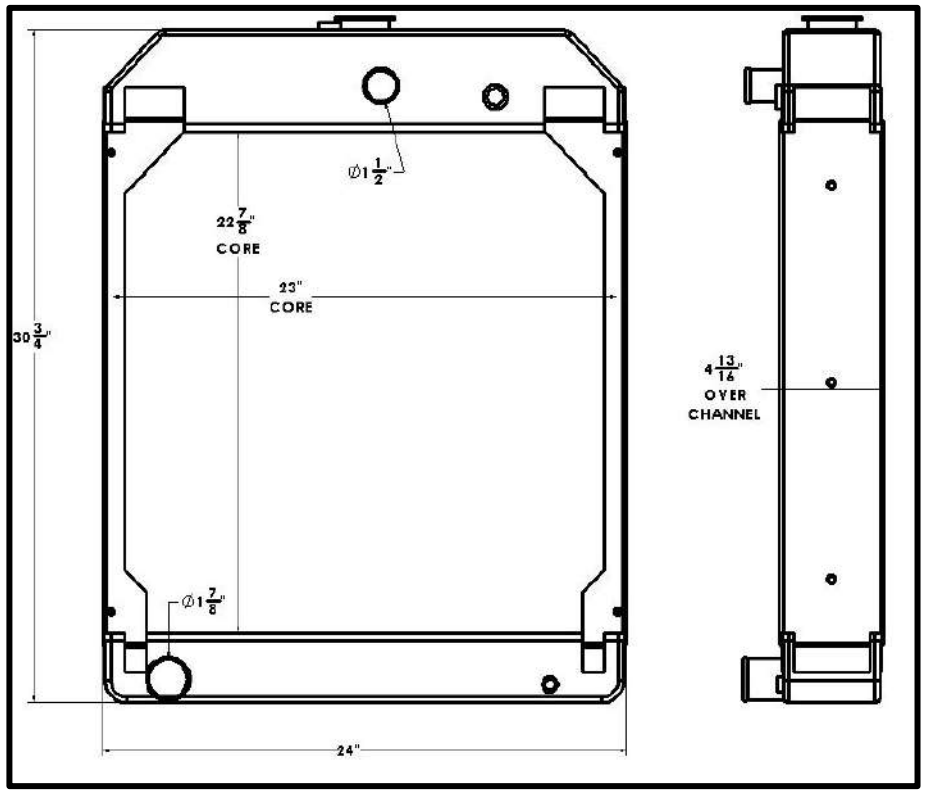

Overall Dimensions: 30-3/4” X 24” X 4-13/16”
Core: 22-7/8” X 23” X 3 ROW
Inlet: 1-1/2”OD
Outlet: 1-7/8”OD

Tel 1.800.774.2168
www.bgrradiator.com

BGR Part Number: ST-0208-7N-NC
MCCORD PN 9459 4708

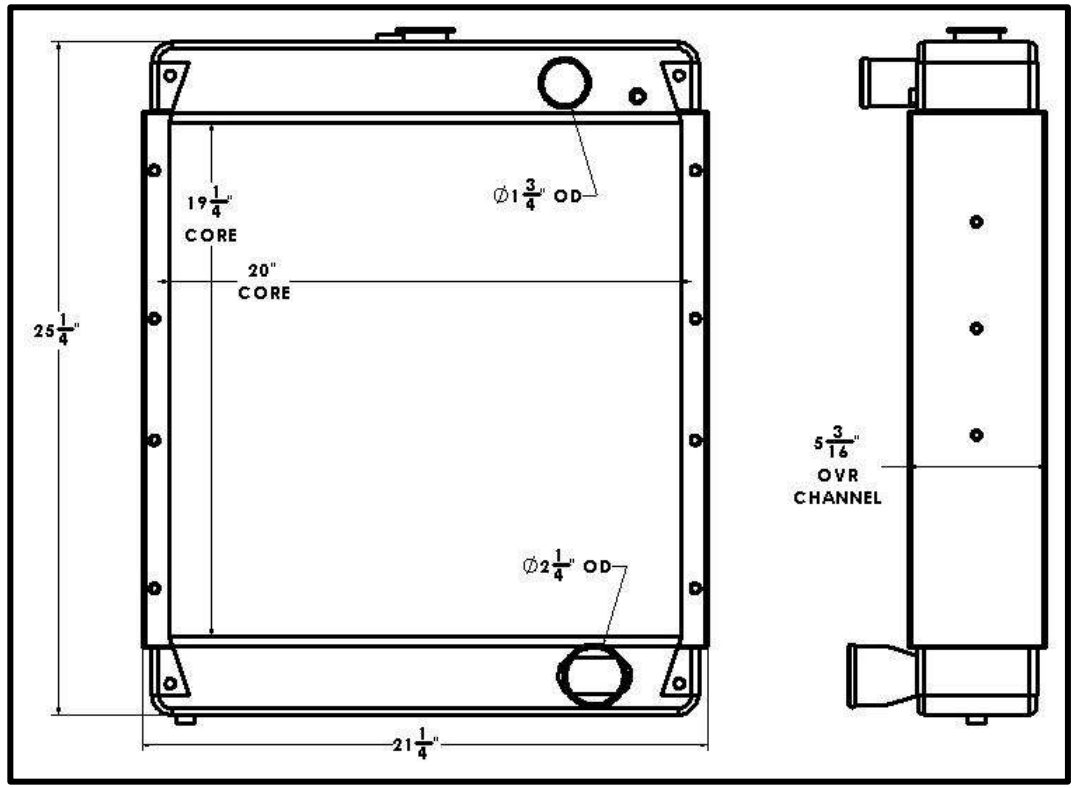

Overall Dimensions: 25-1/4” X 21-1/4” X 5-3/16”
Core: 19-1/4” X 20” X 7 ROW
Inlet: 1-3/4”OD
Outlet: 2-1/4”OD

Listed dimensions may vary slightly from OE

BGR Part Number: ST-0209-2VTX-F
GENERAC 0G1286A

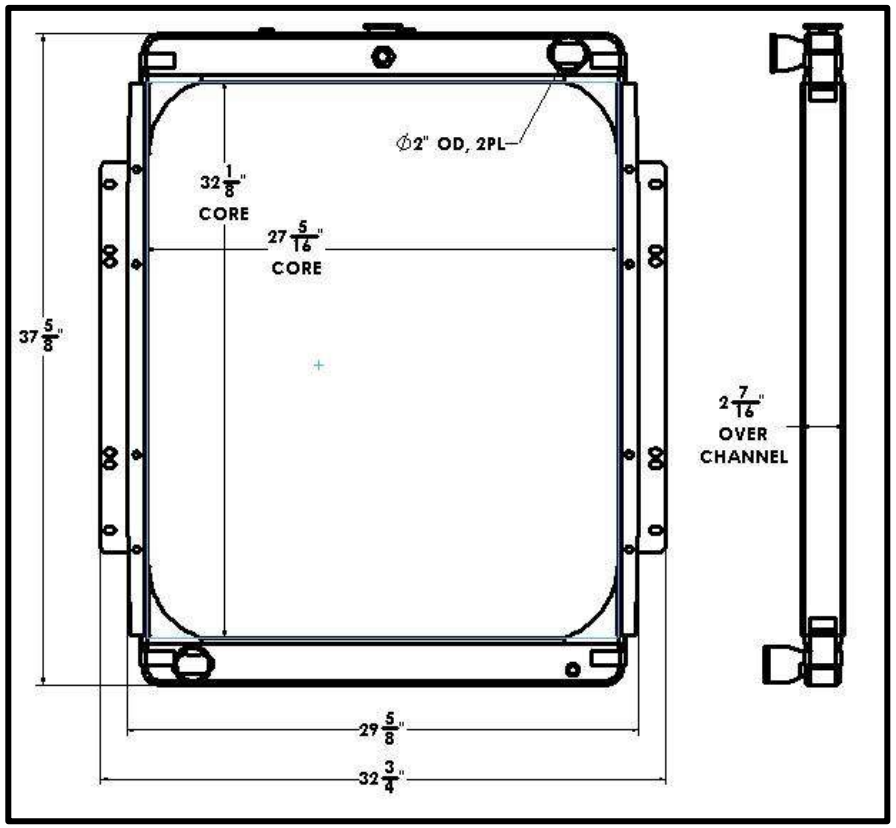

Overall Dimensions: 37-5/8” X 29-5/8” X 2-7/16”
Core: 32-1/8” X 27-5/16” X 2 ROW
Inlet: 2”OD
Outlet: 2”OD

Tel 1.800.774.2168
www.bgrradiator.com

BGR Part Number: ST-0210-4VTW-F
CATERPILLAR 330 BL, PN:136-2275

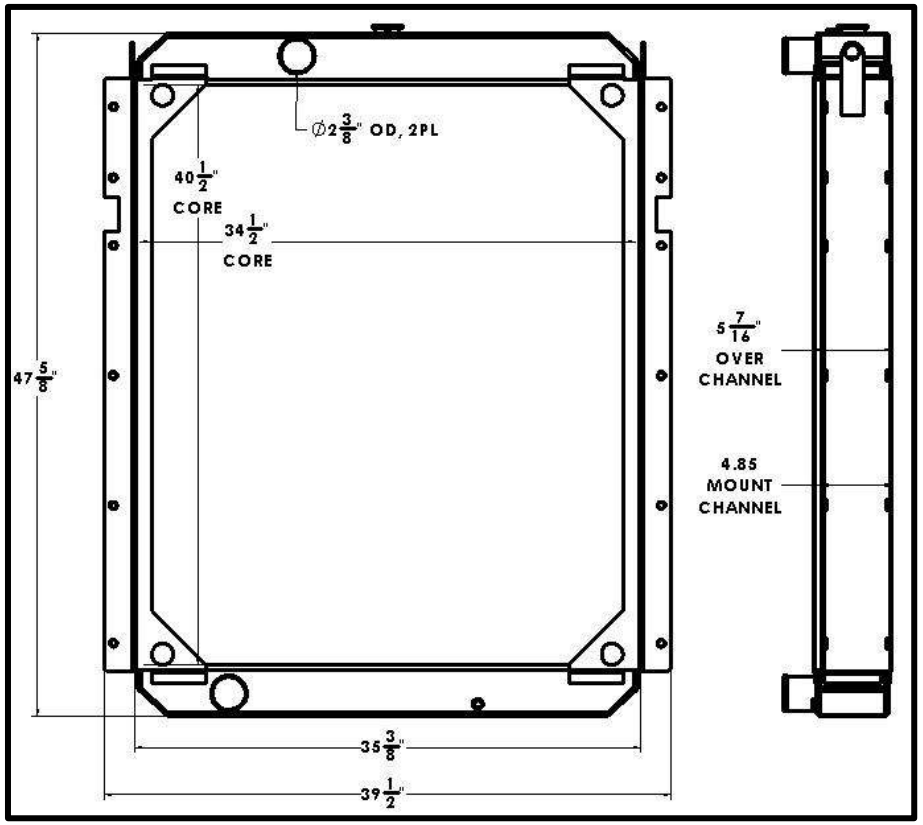

Overall Dimensions: 47-5/8” X 35-3/8” X 5-7/16”
Core: 40-1/2” X 34-1/2” X 4 ROW
Inlet: 2-3/8”OD
Outlet: 2-3/8”OD

Listed dimensions may vary slightly from OE

BGR Part Number: ST-0211-3R-F
ONAN PART NUMBE 130-0815

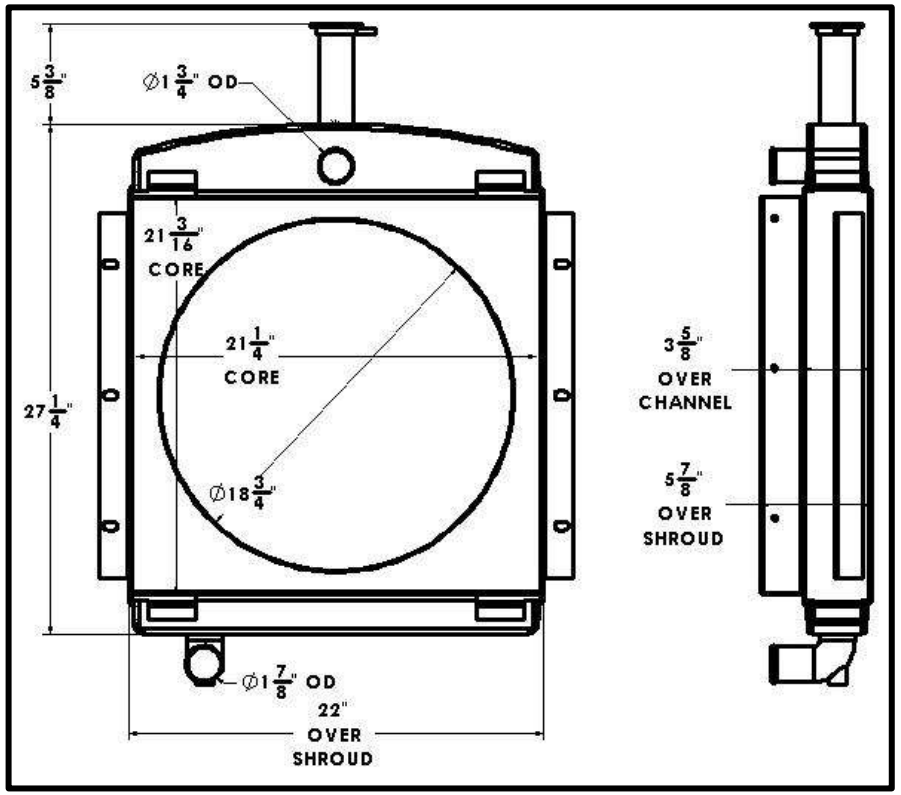

Overall Dimensions: 27-1/4” X 22” X 3-5/8”
Core: 21-3/16” X 21-1/4” X 3 ROW
Inlet: 1-3/4”OD
Outlet: 1-7/8”OD

Tel 1.800.774.2168
www.bgrradiator.com

BGR Part Number: ST-0212-7M-NC
KATOLIGHT MOD D-180FPJ4, ENG RG-6081A

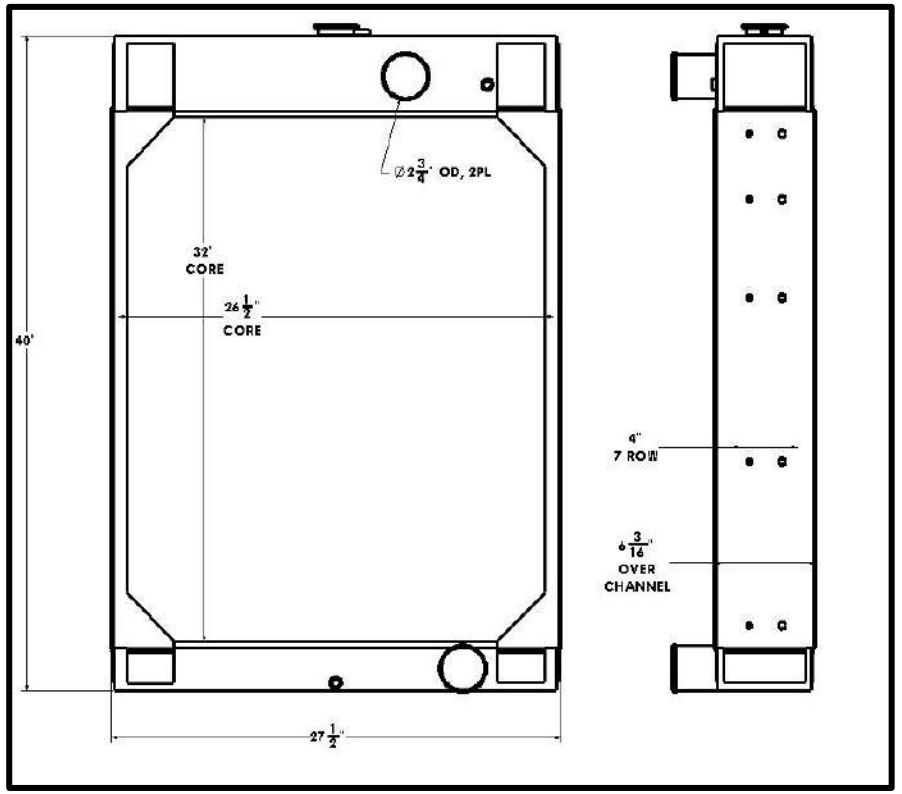

Overall Dimensions: 40” X 27-1/2” X 4-3/16”
Core: 32” X 26-1/2” X 7 ROW
Inlet: 2-3/4”OD
Outlet: 2-3/4”OD

Listed dimensions may vary slightly from OE

BGR Part Number: ST-0213-3VTX-NC

CATERPILLAR 325C

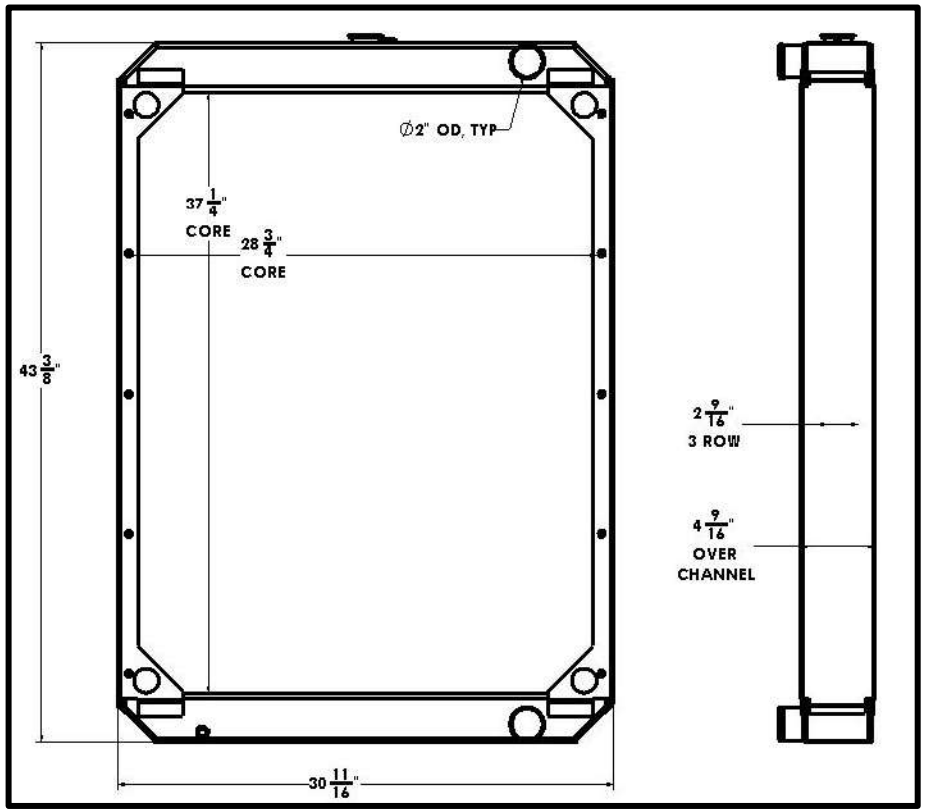

Overall Dimensions: 43-3/8” X 30-11/16” X 4-9/16”

Core: 37-1/4” X 28-3/4” X 3 ROW

Inlet: 2”OD

Outlet: 2”OD

Tel 1.800.774.2168

www.bgrradiator.com

BGR Part Number: ST-0214-3X-NC

PERKINS 120 787, AR36677, MNY202248014F0P, 2485B263, 450101, AR36677, 245984, MNY20226501E, 2485B269, MNY20224801F, RB263B, 245982, 245984

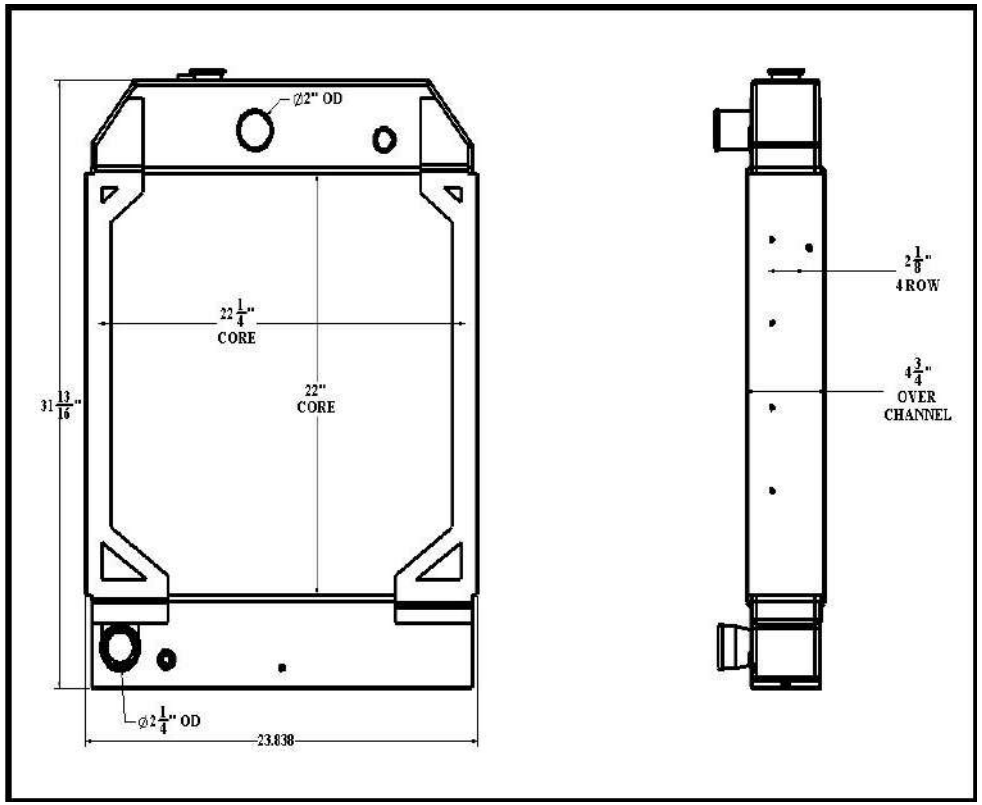

Overall Dimensions: 31-13/16” X 23.838” X 4-3/4”

Core: 22” X 22-1/4” X 4 ROW

Inlet: 2”OD

Outlet: 2-1/4”OD

Listed dimensions may vary slightly from OE

BGR Part Number: ST-0215-5P-F

GENERAC OA2816

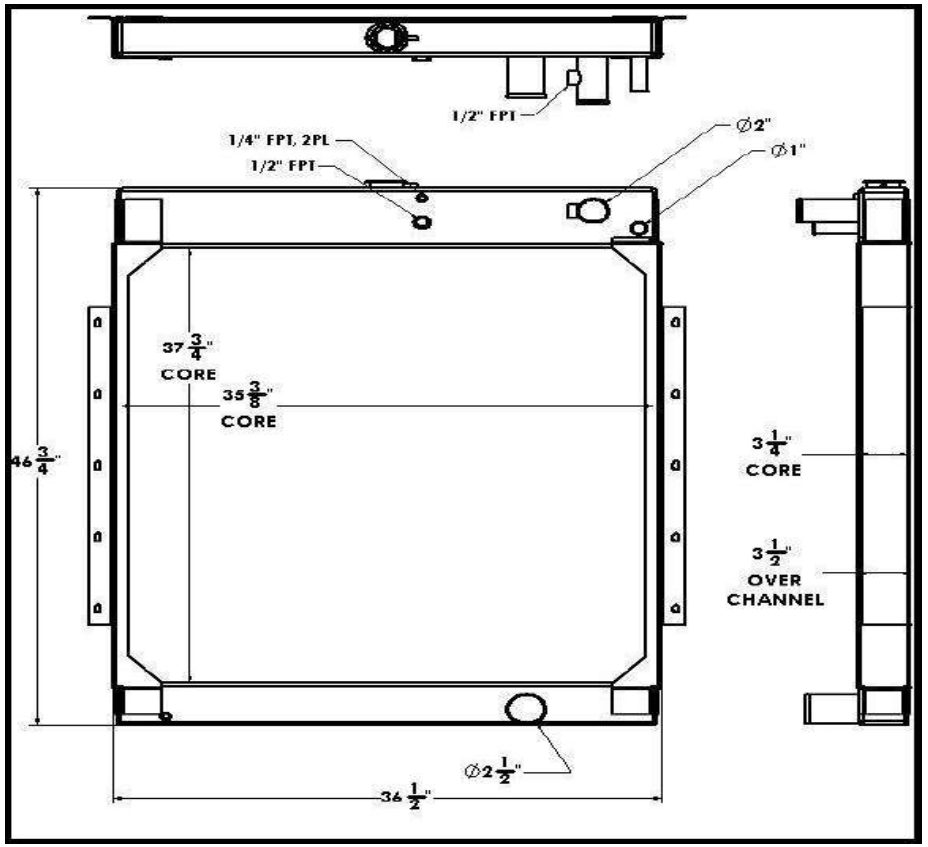

Overall Dimensions: 46-3/4” X 36-1/2” X 3-1/2”
Core: 37-3/4” X 35-3/8” X 5 ROW
Inlet: 2” OD
Outlet: 2-1/2” OD

Tel 1.800.774.2168
www.bgrradiator.com

BGR Part Number: ST-0216-5I-B

1A11500, 030284, 130-0569

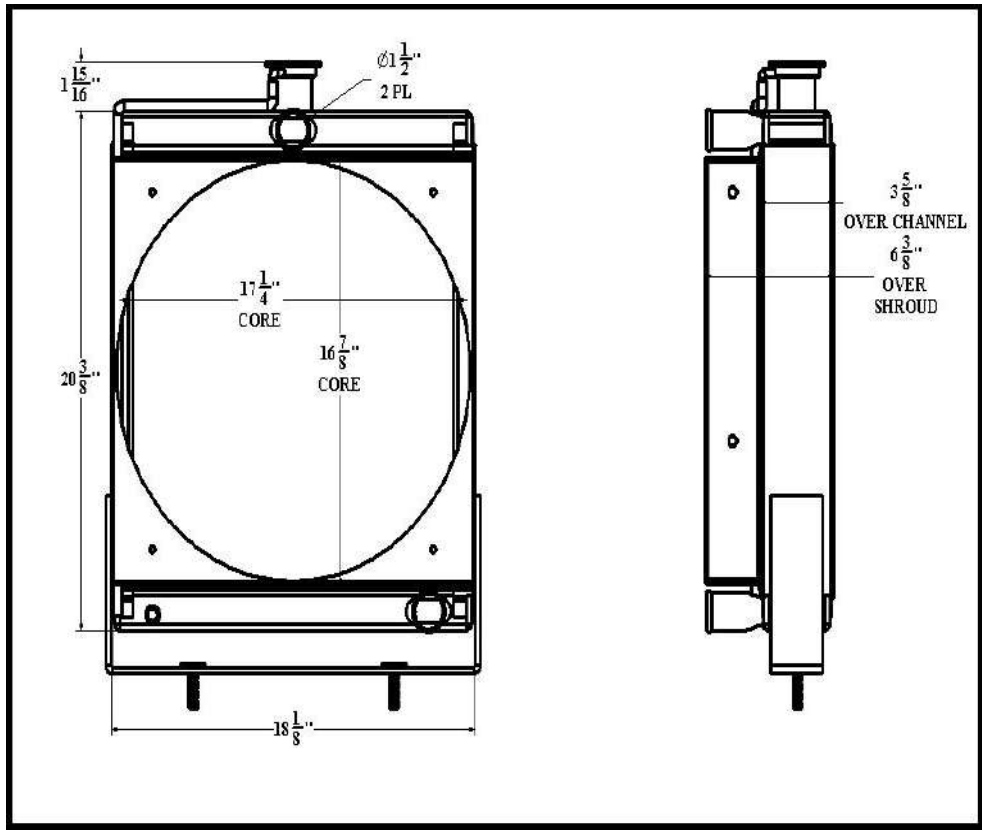

Overall Dimensions: 20-3/8” X 18-1/8” X 3-5/8”
Core: 16-7/8” X 17-1/4” 5 ROW
Inlet: 1-1/2” OD
Outlet:1-1/2” OD

Listed dimensions may vary slightly from OE

BGR Part Number: ST-0217-3I-NC
ONAN PART NUMBER 130-1817

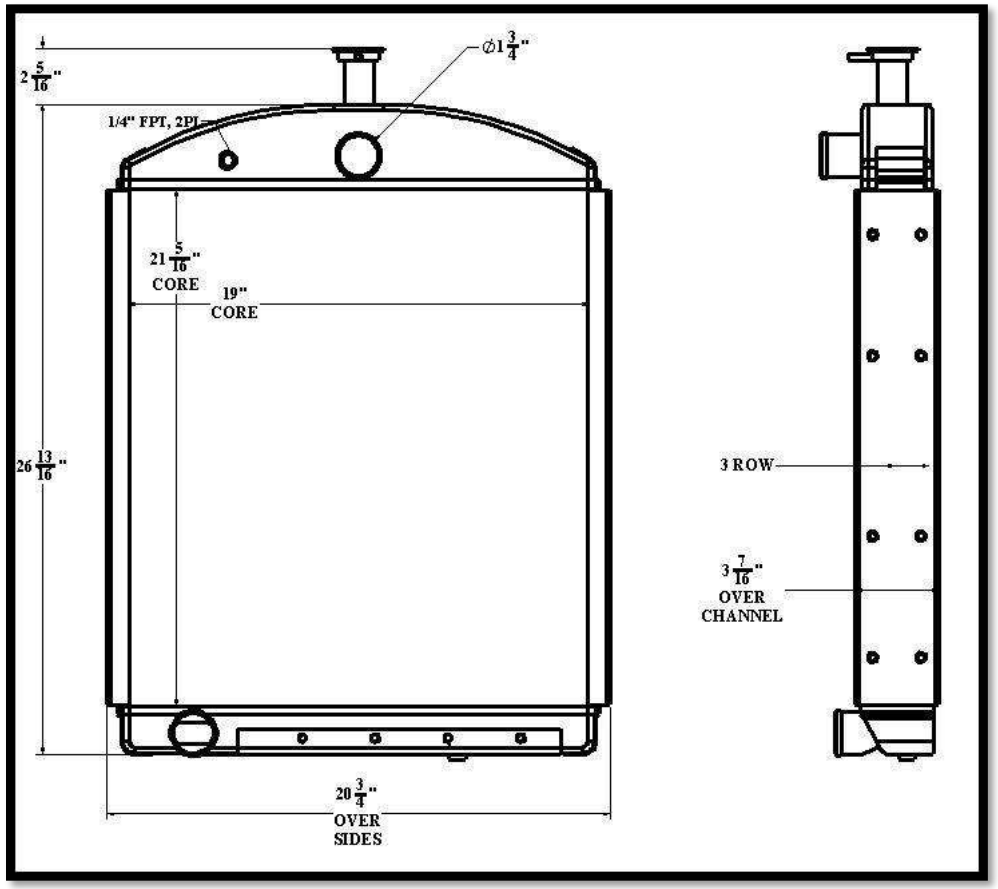

Overall Dimensions: 26-13/16” X 20-3/4” X 3-7/16”
Core: 21-5/16” X 19” X 3 ROW
Inlet: 1-3/4” OD
Outlet: 1-3/4” OD

Tel 1.800.774.2168
www.bgrradiator.com

BGR Part Number: ST-0218-5EC-NC
GM47124-RADIATOR

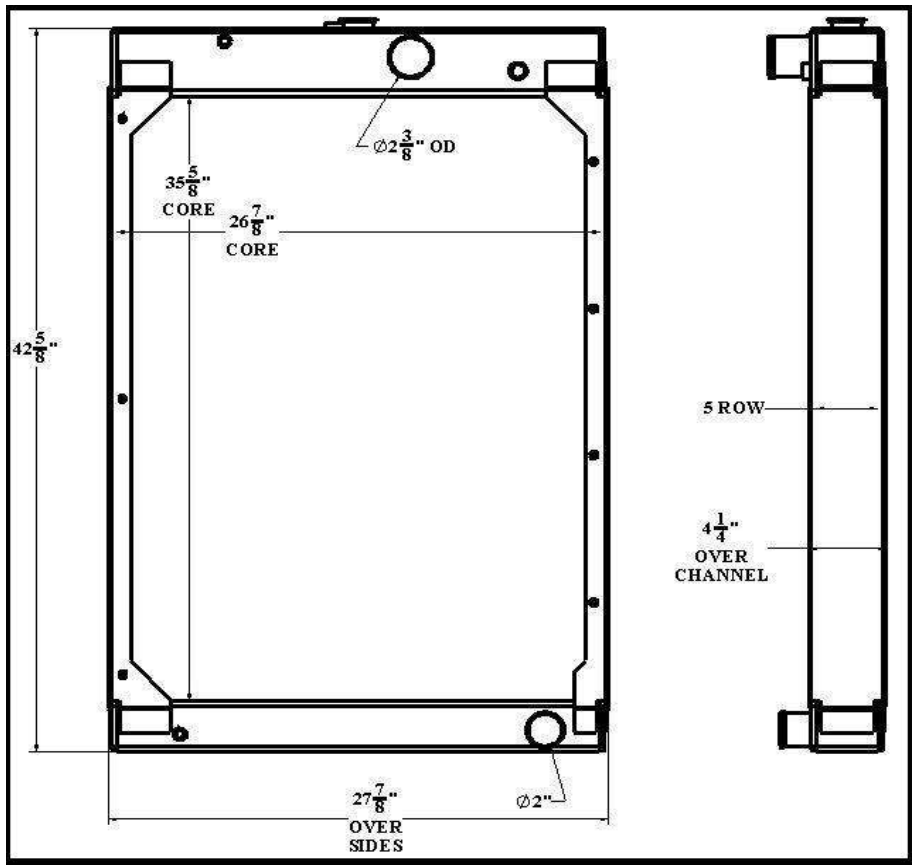

Overall Dimensions: 42-5/8” X 27-7/8” X 4-1/4”
Core: 35-5/8” X 26-7/8” X 5 ROW
Inlet: 2-3/8” OD
Outlet: 2” OD

Listed dimensions may vary slightly from OE

BGR Part Number: ST-0219-6R-F

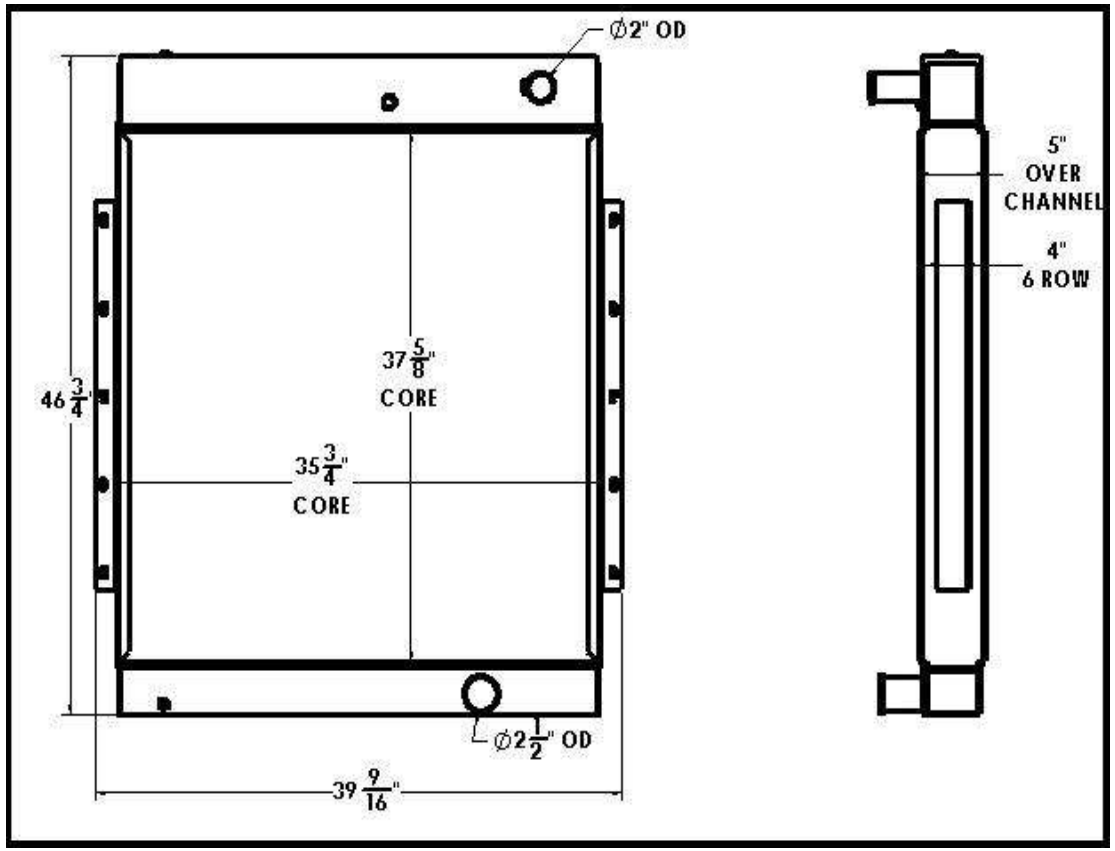

Overall Dimensions: 43-3/4” X 39-9/16” X 5”
Core: 37-5/8” X 35-3/4”X 5”
Inlet: 2” OD
Outlet:2-1/2”OD

Tel 1.800.774.2168
www.bgrradiator.com

BGR Part Number: ST-0220-4VT-B
JOHN DEERE

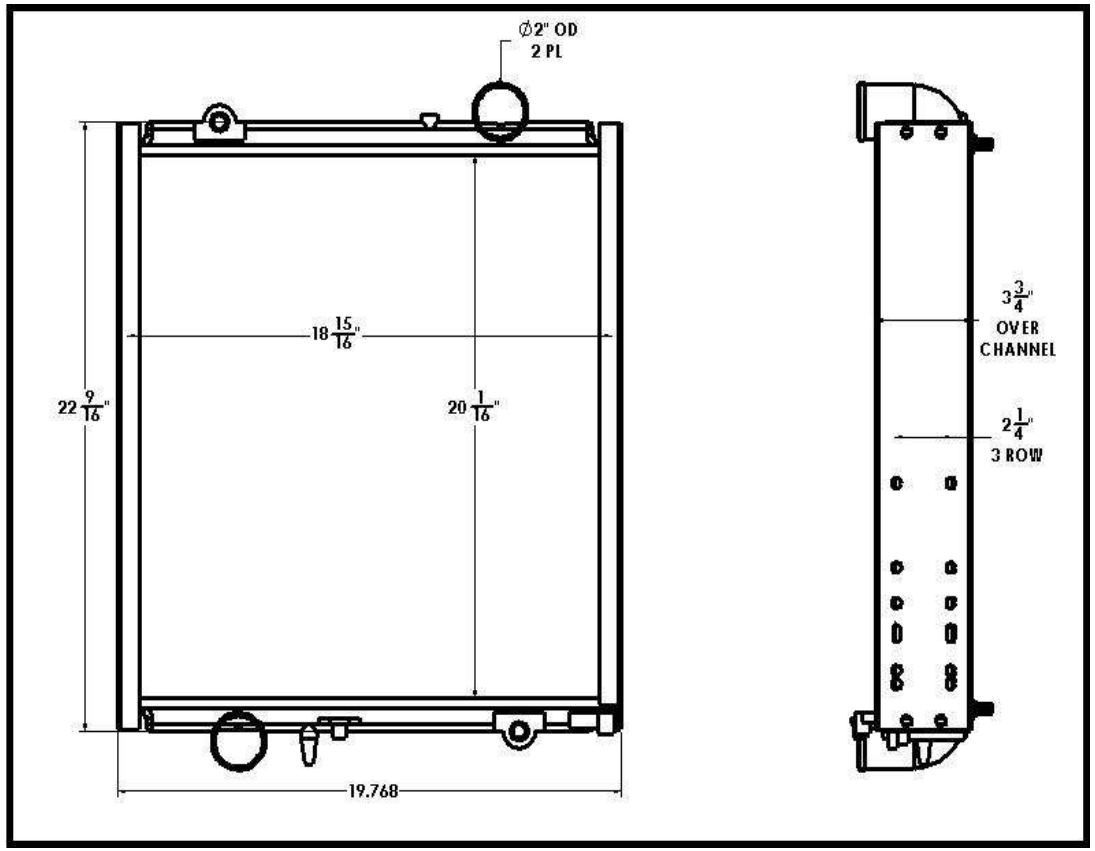

Overall Dimensions: 22-9/16” X 19.768” X 3-3/4”
Core: 20-1/16” X 18-15/16” X 2-1/4”
Inlet: 2” OD
Outlet: 2” OD

Listed dimensions may vary slightly from OE

BGR Part Number: ST-0221-7X-EF

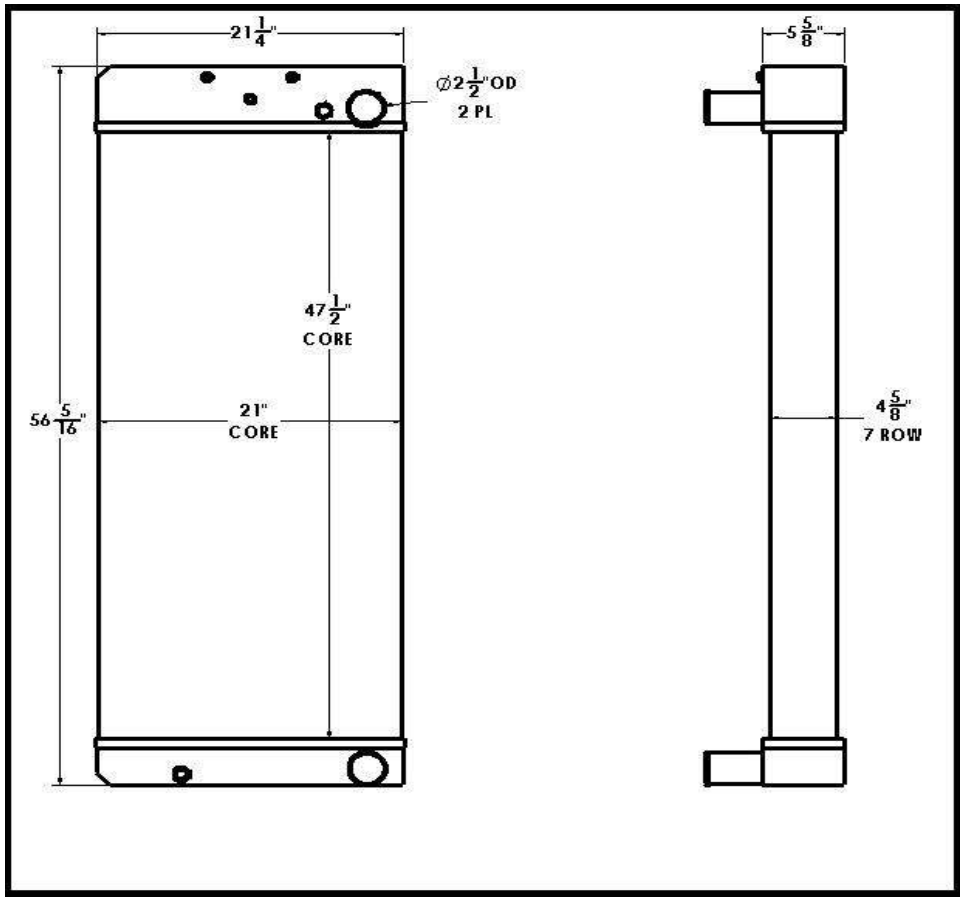

Overall Dimensions: 56-5/16” X 21-1/4” X 5-5/8”
Core: 47-1/2” X 21” X 7 ROW
Inlet: 2-1/2” OD
Outlet: 2-1/2” OD

Tel 1.800.774.2168
www.bgrradiator.com

BGR Part Number: ST-0222-5M-NC
VOLVO 843989, 8549 BGR REV 2

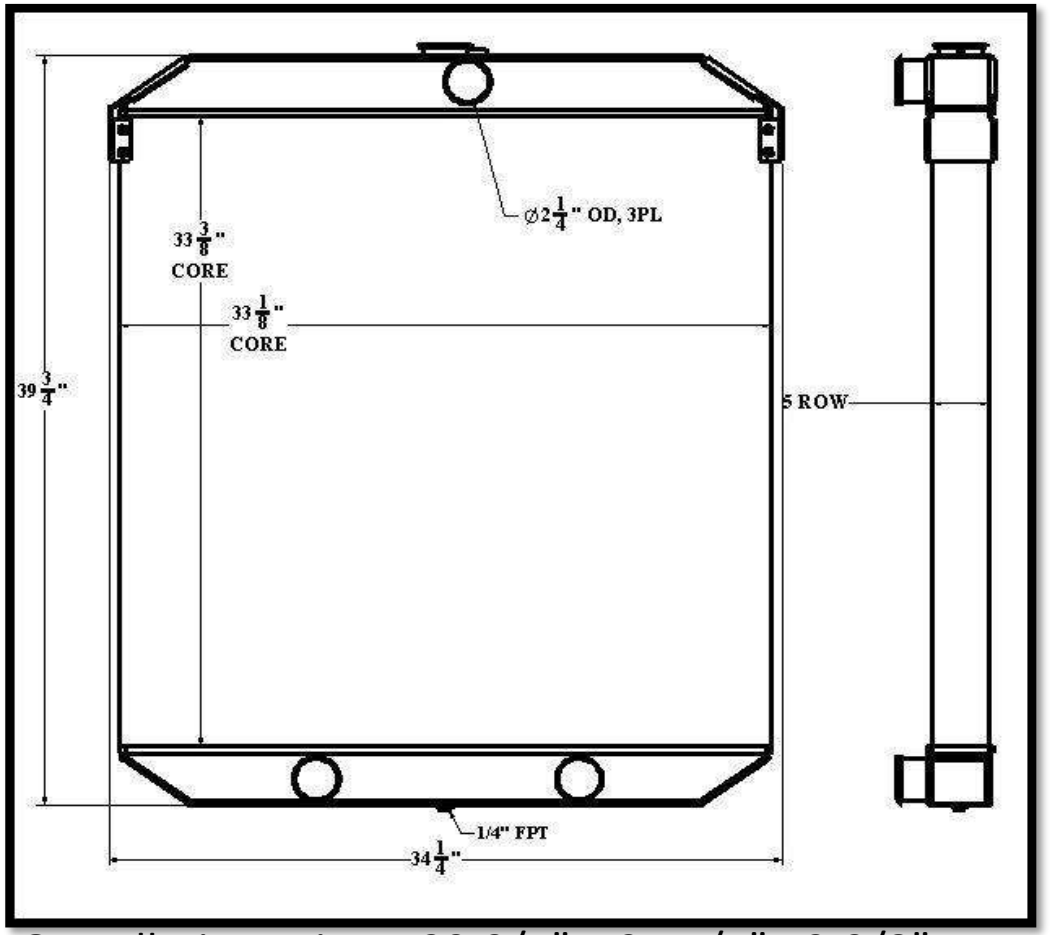

Overall Dimensions: 39-3/4” X 34-1/4”X 3-3/8”
Core: 33-3/8” X 33-1/8” X 5 ROW
Inlet: 2-1/4” OD
Outlet: 2-1/4” OD

Listed dimensions may vary slightly from OE

BGR Part Number: ST-0223-3X-B
WOOD CHIPPER

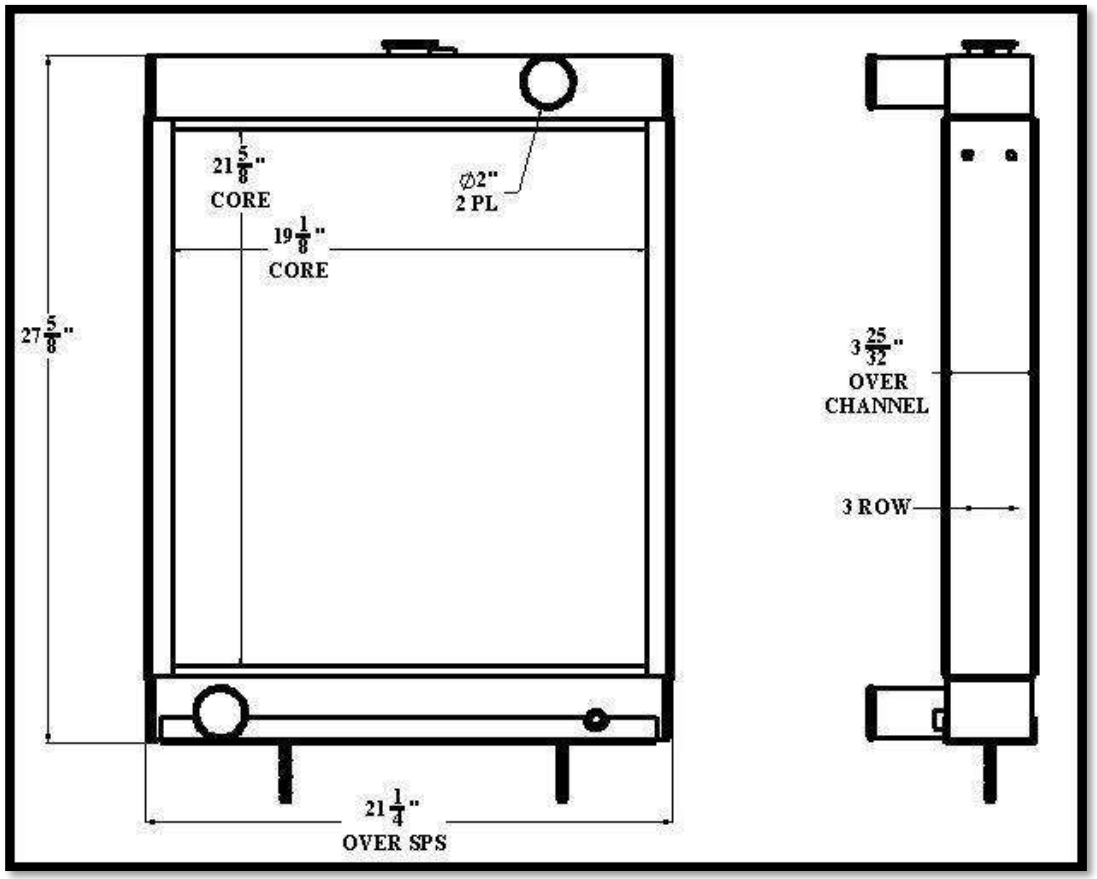

Overall Dimensions: 27-5/8” X 21-1/4” X 3-25/32”
Core: 21-5/8” X 19-1/8” X 3 ROW
Inlet: 2” OD
Outlet: 2” OD

Tel 1.800.774.2168
www.bgrradiator.com

BGR Part Number: ST-0224-5P-F
GENERAC 0G1219ASRV

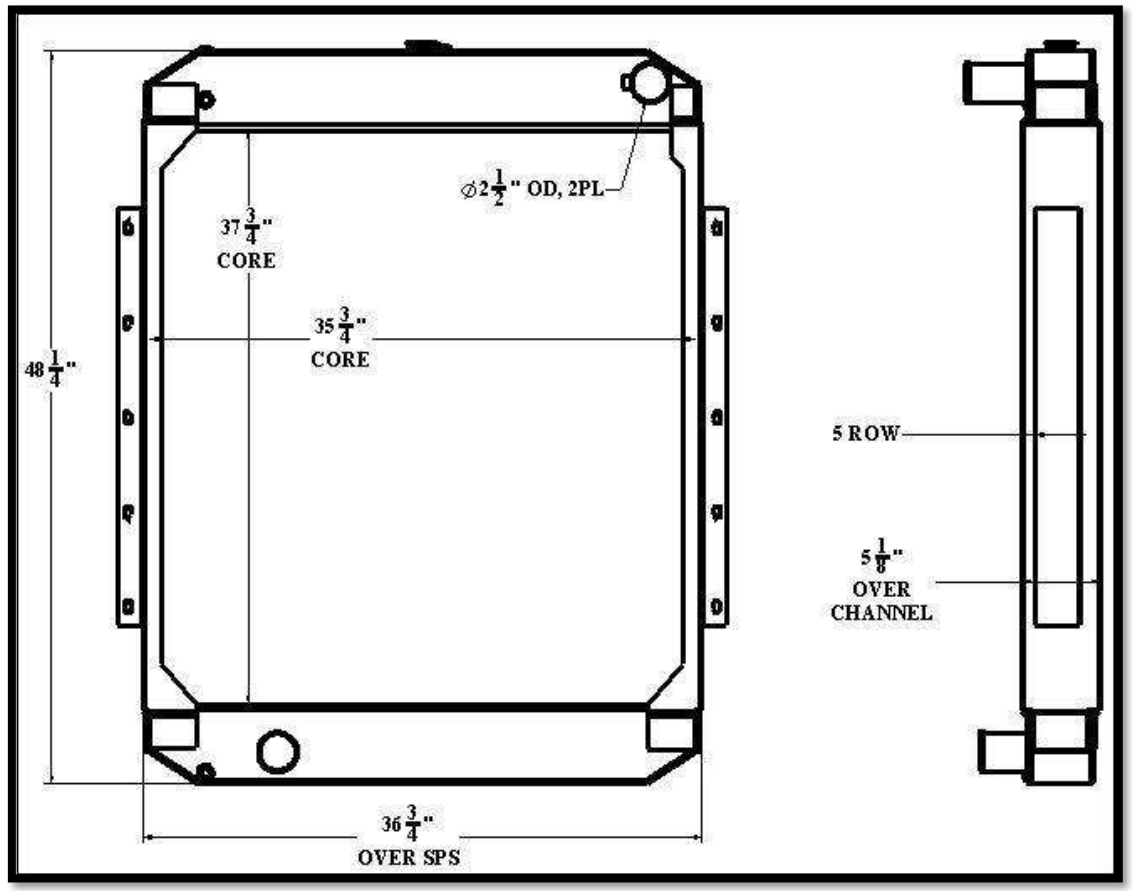

Overall Dimensions: 48-1/8” X 36-3/4” X 5-1/8”
Core: 37-3/4” X 35-3/4” X 5 ROW
Inlet: 2-1/2” OD
Outlet: 2-1/2” OD

Listed dimensions may vary slightly from OE

BGR Part Number: ST-0225-5M-F
ONAN 130-0809 WITH SHROUD

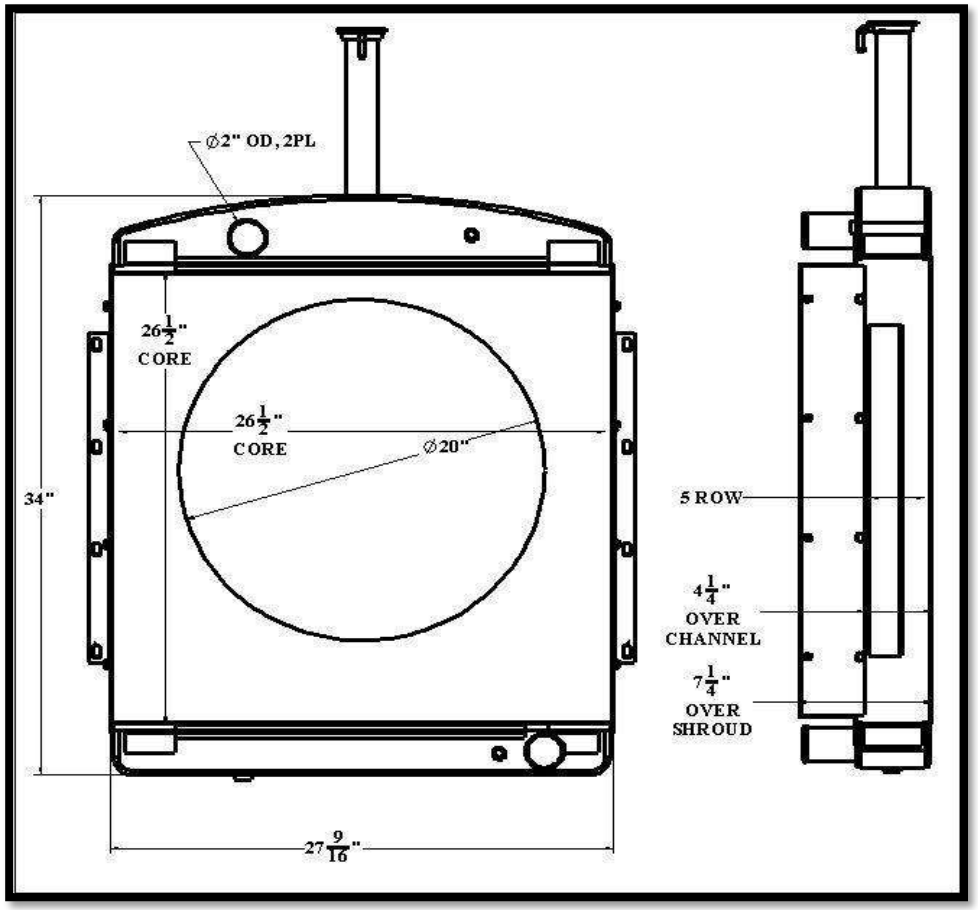

Overall Dimensions: 34” X 27-9/16” X 4-1/4”
Core: 26-1/2” X 26-1/2” X 5 ROW
Inlet: 2” OD
Outlet: 2” OD

Tel 1.800.774.2168
www.bgrradiator.com

BGR Part Number: ST-0226-5M-NC
JOSEPHSON MFG (OC 01-0175) (ROCK DRILL)

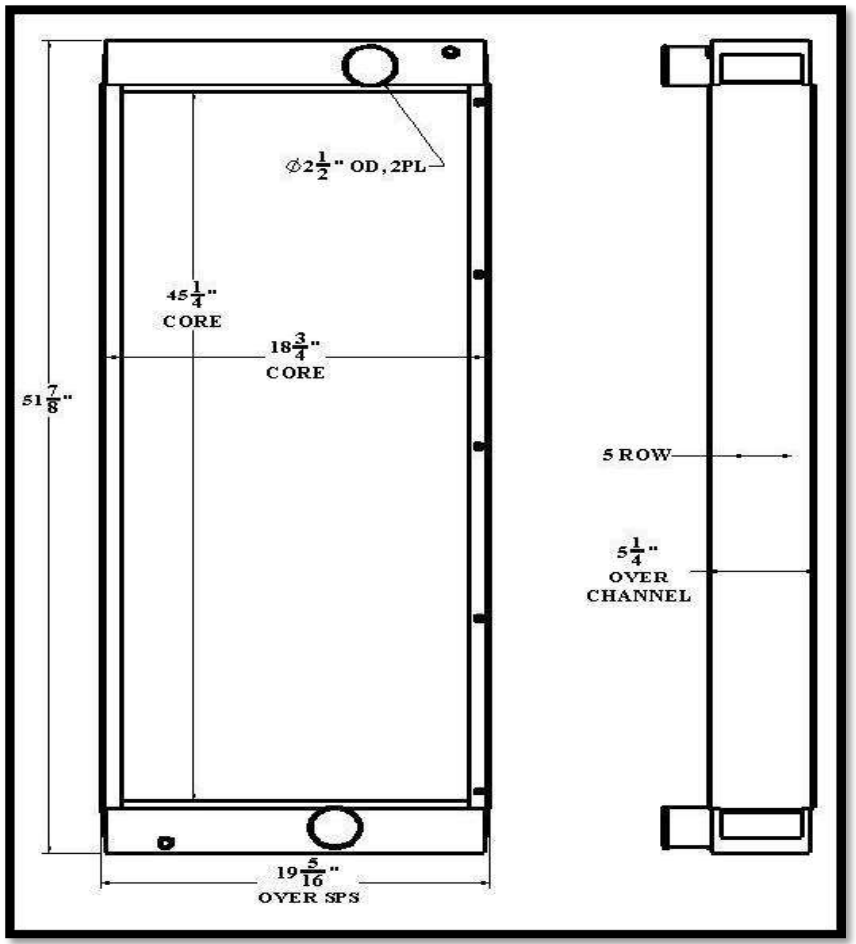

Overall Dimensions: 51-7/8” X 19-15/16” X 5-1/4”
Core: 45-1/4” X 18-3/4” X 5 ROW
Inlet: 2-1/2” OD
Outlet: 2-1/2” OD

Listed dimensions may vary slightly from OE

BGR Part Number: ST-0227-4M-NC
Olympian 120-480 50KW PERKINS 120-507, 913001091

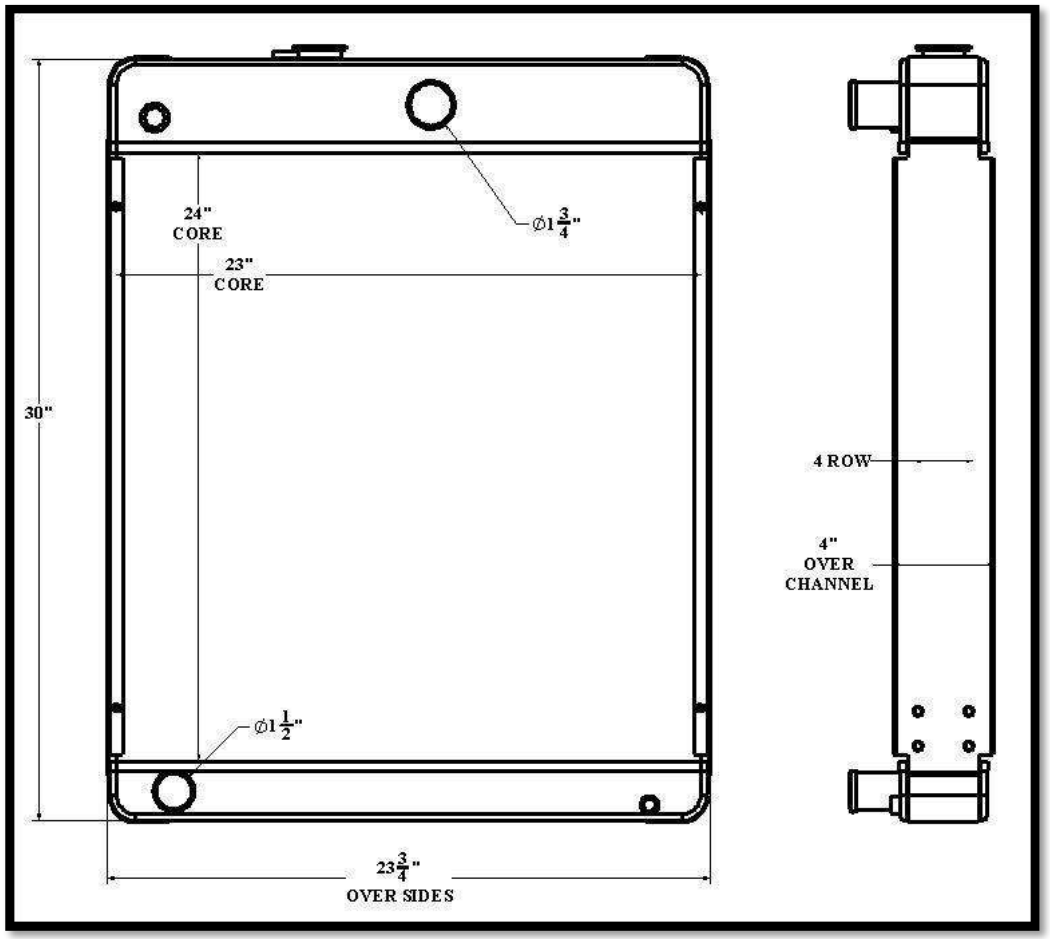

Overall Dimensions: 30” X 23-3/4” X 4”
Core: 24” X 23” X 4 ROW
Inlet: 1-3/4” OD
Outlet: 1-1/2” OD

Tel 1.800.774.2168
www.bgrradiator.com

BGR Part Number: ST-0228-5M-F
ONAN 130-0713

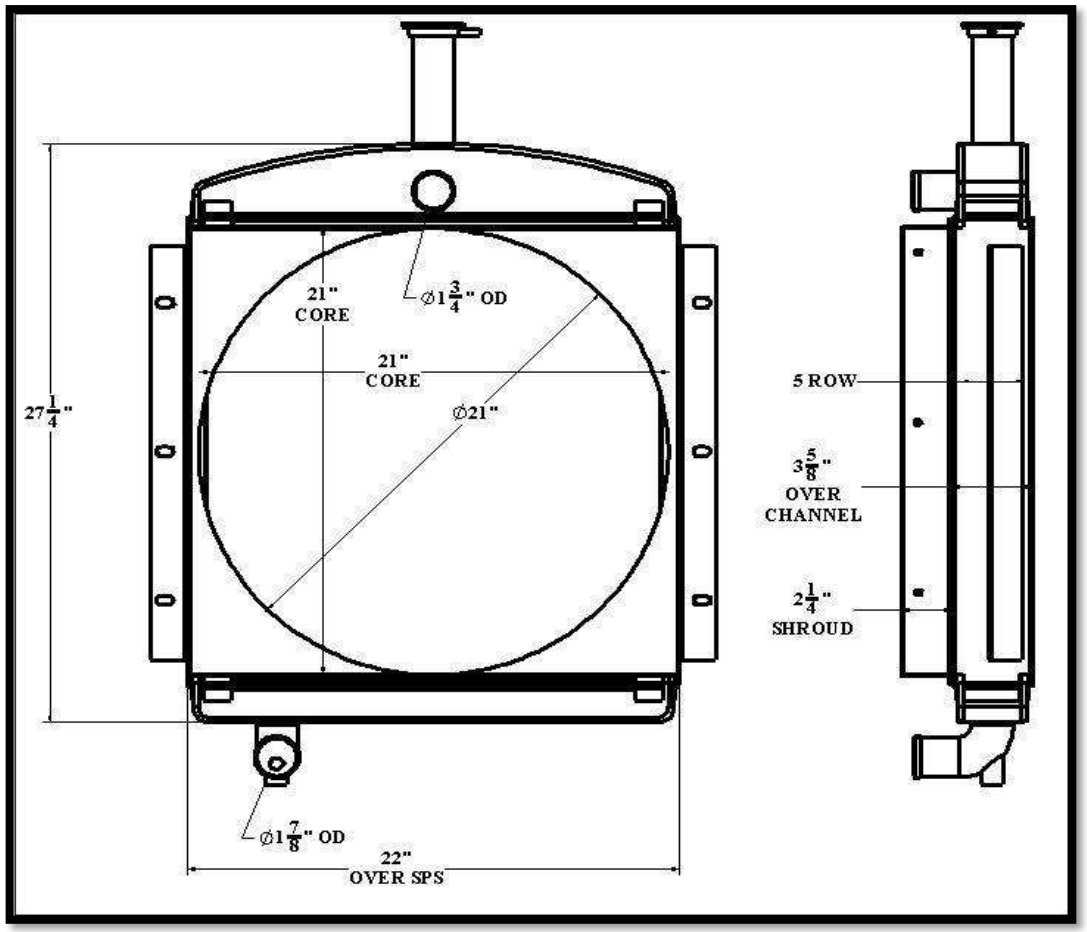

Overall Dimensions: 27-1/4” X 22” X 3-5/8”
Core: 21” X 21” X 5 ROW
Inlet: 1-3/4” OD
Outlet: 1-7/8” OD

Listed dimensions may vary slightly from OE

BGR Part Number: ST-0229-5M-B

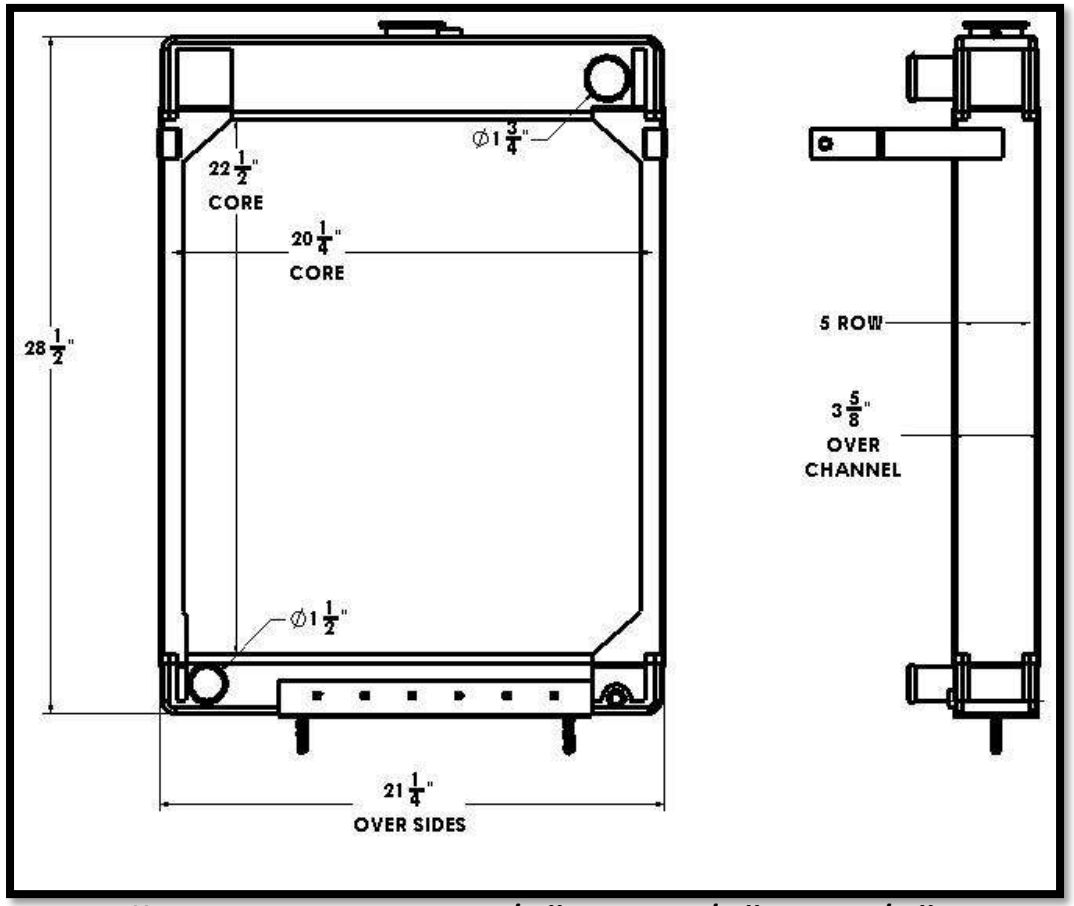

Overall Dimensions: 28-1/2” X 21-1/4” X 3-5/8”
Core: 22-1/2” X 20-1/4” X 5 ROW
Inlet: 1-3/4” OD
Outlet: 1-1/2” OD

Tel 1.800.774.2168
www.bgrradiator.com

BGR Part Number: ST-0230-4VTW-NC
RAD SPEC 7532

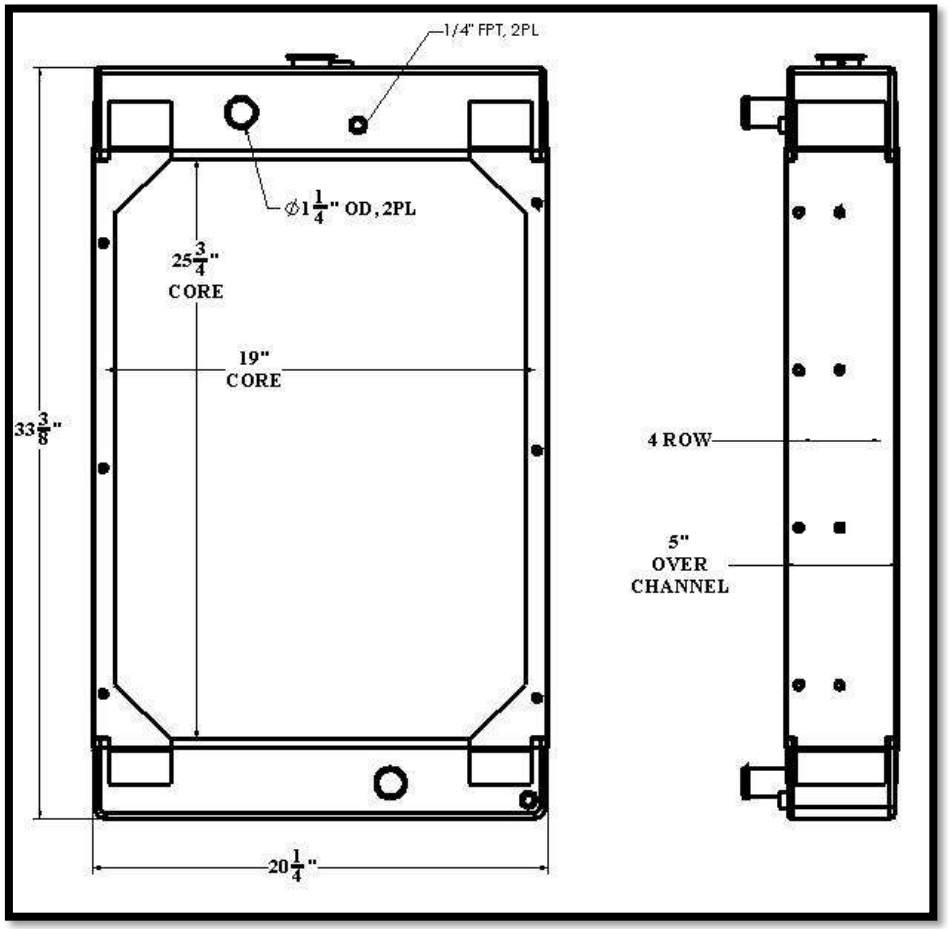

Overall Dimensions: 33-3/8” X 20-1/4” X 5”
Core: 25-3/4” X 19” X 4 ROW
Inlet: 1-1/4” OD
Outlet: 1-1/4” OD

ST229

Listed dimensions may vary slightly from OE

ST230

BGR Part Number: ST-0231-5X-NC

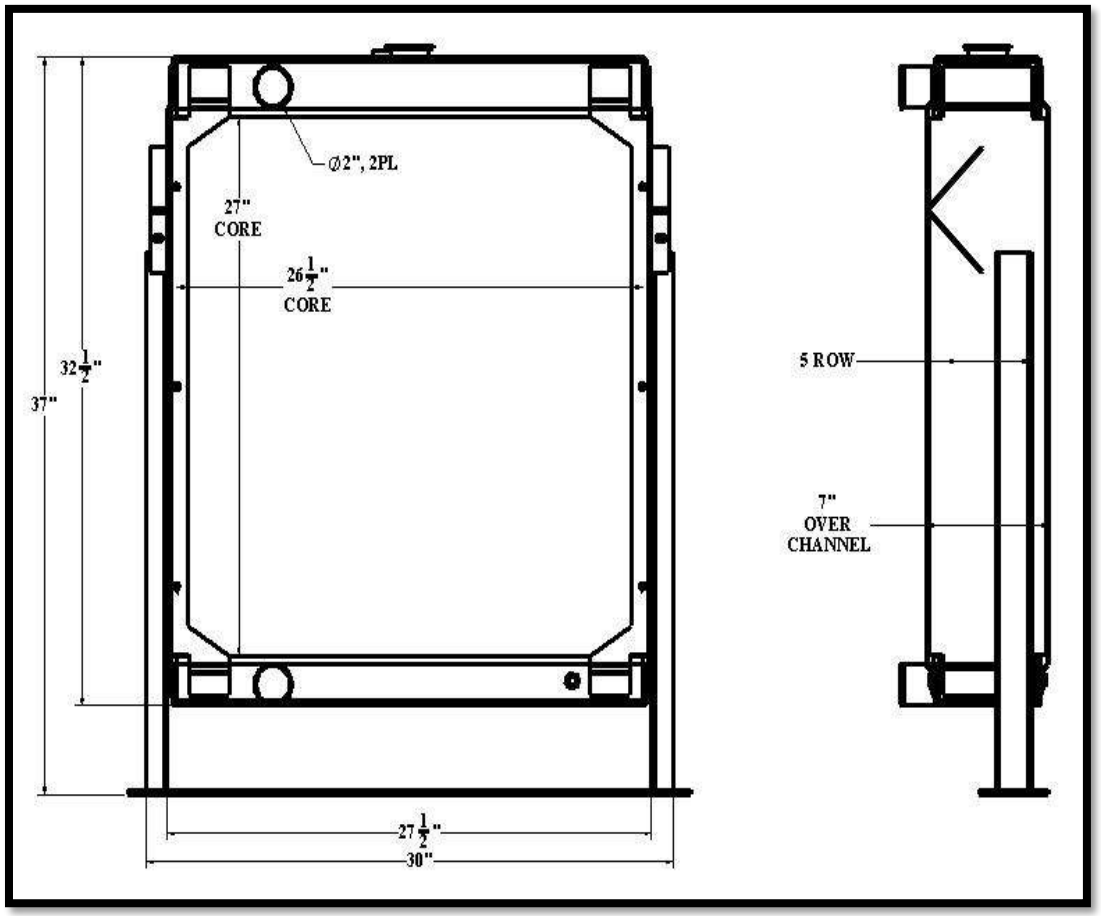

Overall Dimensions: 32-1/2” X 27-1/2” X 7”
Core: 27” X 26-1/2” X 5 ROW
Inlet: 2” OD
Outlet: 2” OD

Tel 1.800.774.2168
www.bgrradiator.com

BGR Part Number: ST-0232-5T-NC
KOHLER A-255608, 60KW

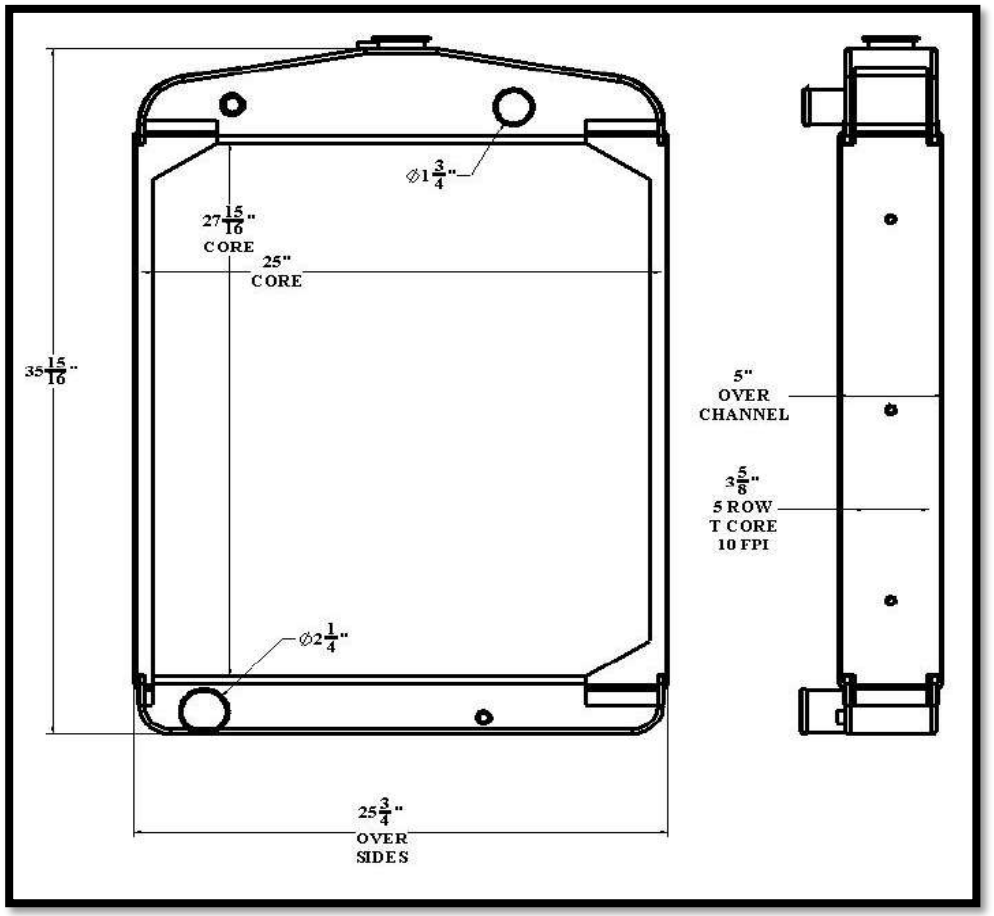

Overall Dimensions: 36-15/16” X 25-3/4” X 5”
Core: 27-15/16” X 25” X 5 ROW
Inlet: 1-3/4” OD
Outlet: 2-1/4” OD

Listed dimensions may vary slightly from OE

BGR Part Number: ST-0233-6M-B

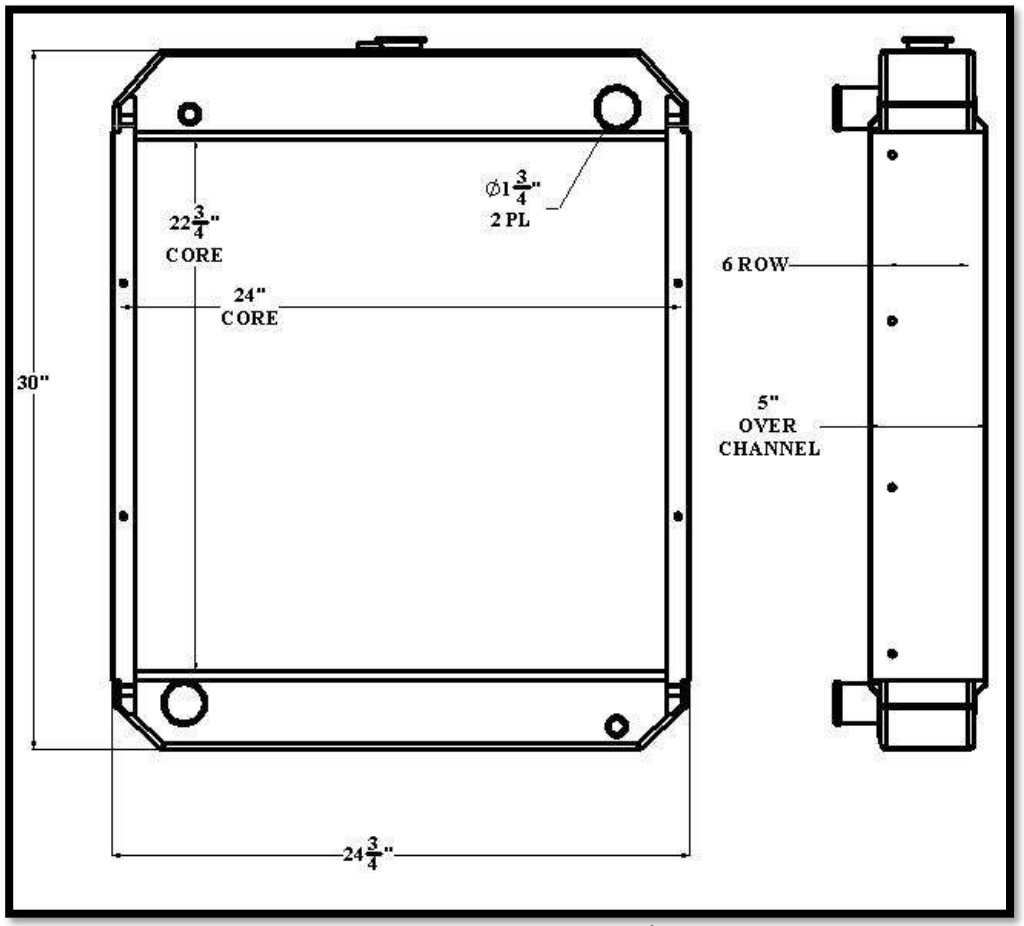

Overall Dimensions: 30” X 24-3/4” X 5”
Core: 22-3/4” X 24” X 6 ROW
Inlet: 1-3/4” OD
Outlet: 1-3/4” OD

Tel 1.800.774.2168
www.bgrradiator.com

BGR Part Number: ST-0234-5P-EF

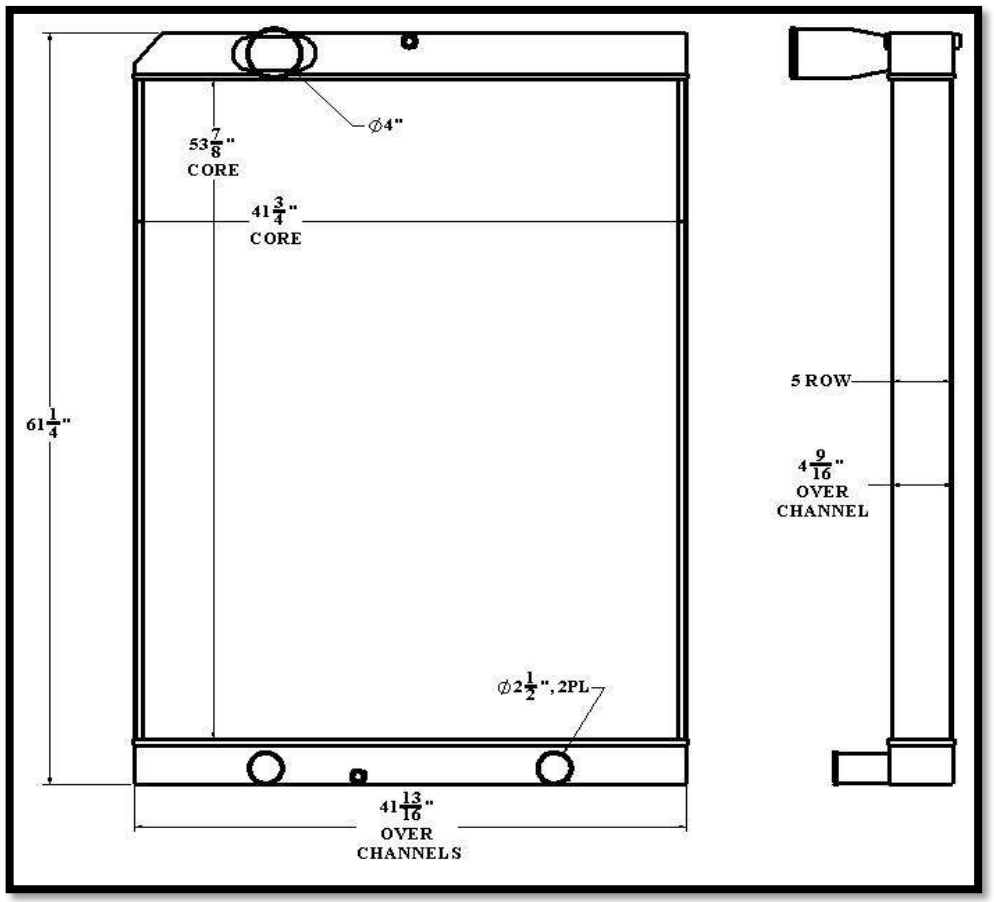

Overall Dimensions: 61-1/4” X 41-13/16” X 49/16”
Core: 53-7/8” X 41-3/4” X 5 ROW
Inlet: 4” OD
Outlet: 2-1/2” 2PL OD

Listed dimensions may vary slightly from OE

BGR Part Number: ST-0235-4M-NC
CATERPILLAR 2N0254

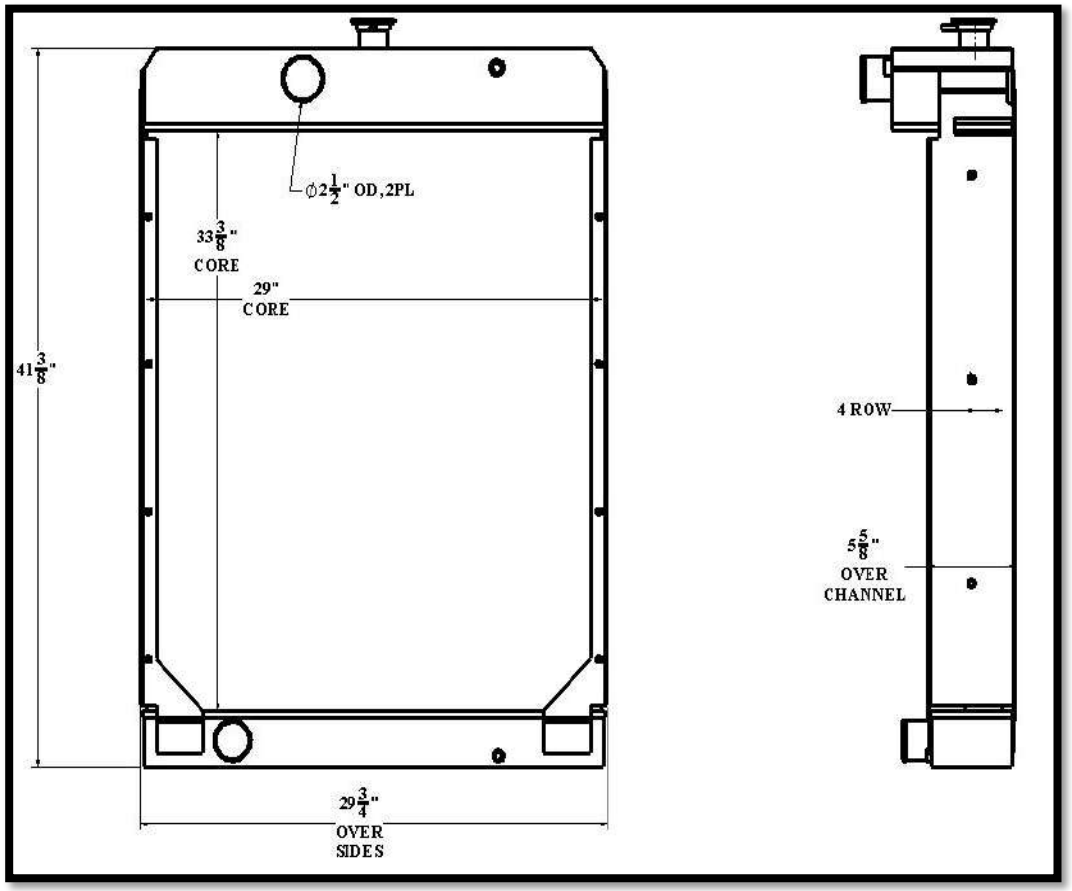

Overall Dimensions: 41-3/8” X 29-3/4” X 5-5/8”
Core: 33-3/8” X 29” X 4 ROW
Inlet: 2-1/2” OD
Outlet: 2-1/2” OD

Tel 1.800.774.2168
www.bgrradiator.com

BGR Part Number: ST-0236-4VT-EF
KOHLER OE#: GB30301253508NE

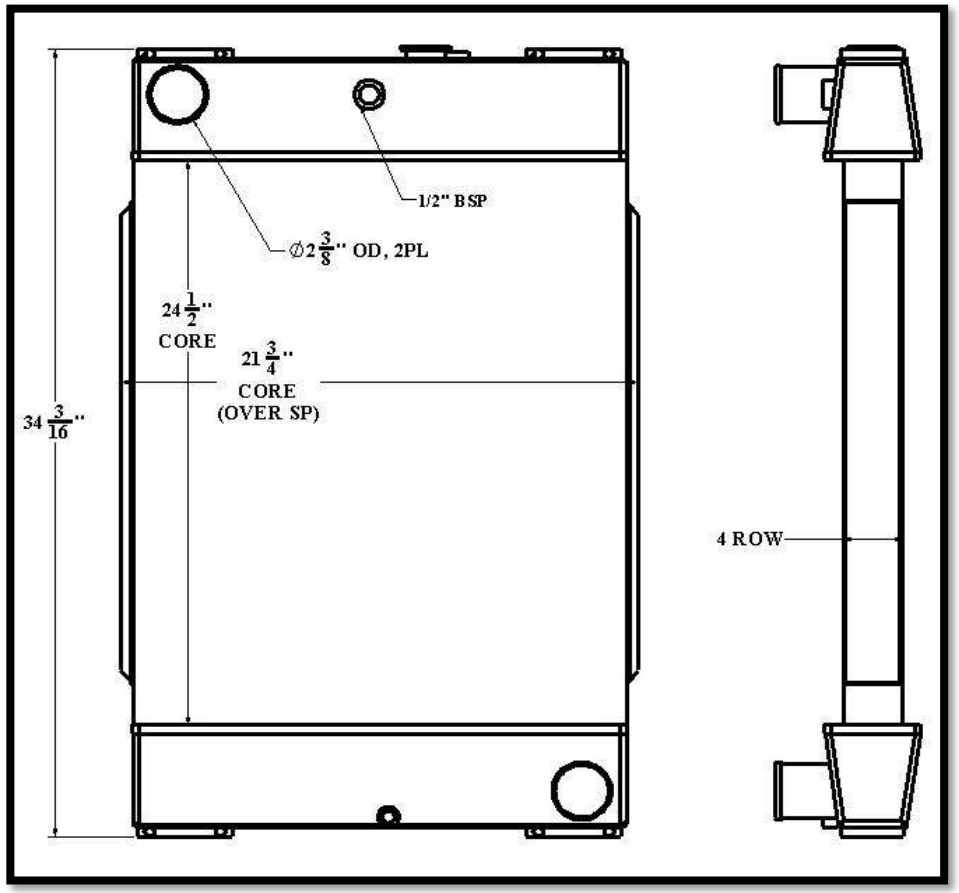

Overall Dimensions: 34-3/16” X 21-3/4” X 4-1/8”
Core: 24-1/2” X 21-3/4” X 4 ROW
Inlet: 2-3/8” OD
Outlet: 2-3/8” OD

Listed dimensions may vary slightly from OE

BGR Part Number: ST-0237-6M-NC
KOHLER A-273927

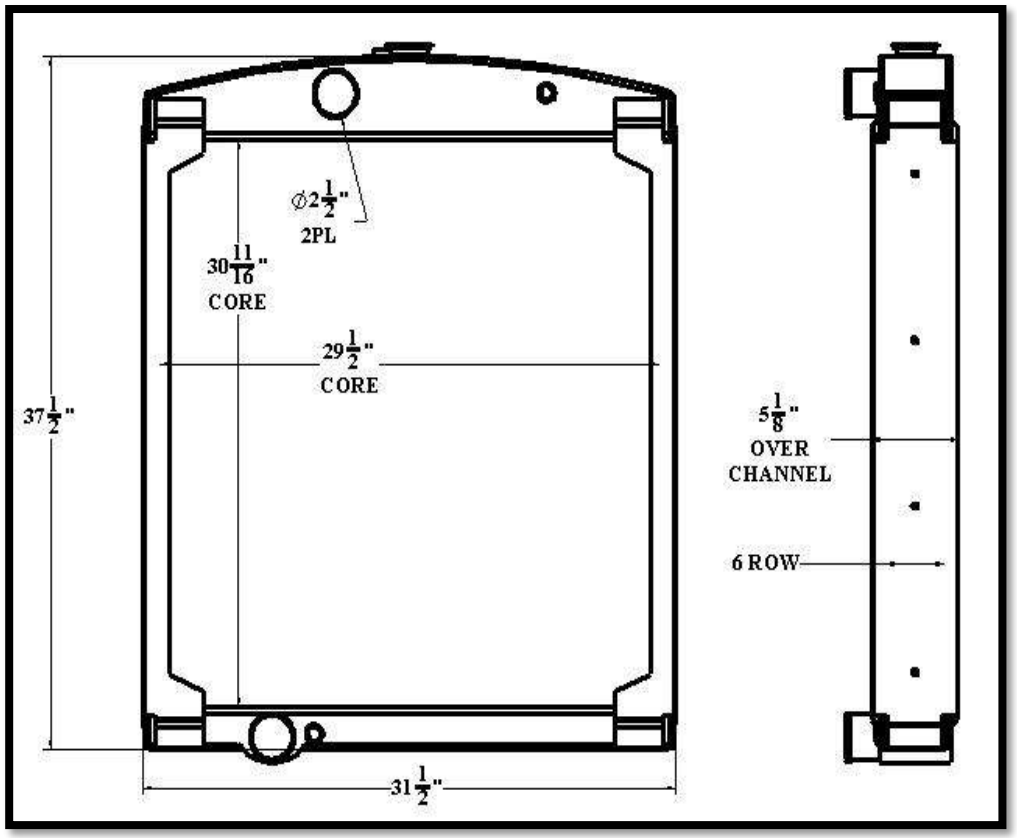

Overall Dimensions: 37-1/2” X 31-1/2” X 5-1/8”
Core: 30-11/16” X 29-1/2” X 6 ROW
Inlet: 2-1/2” OD
Outlet: 2-1/2” OD

Tel 1.800.774.2168
www.bgrradiator.com

BGR Part Number: ST-0238-4M-NC

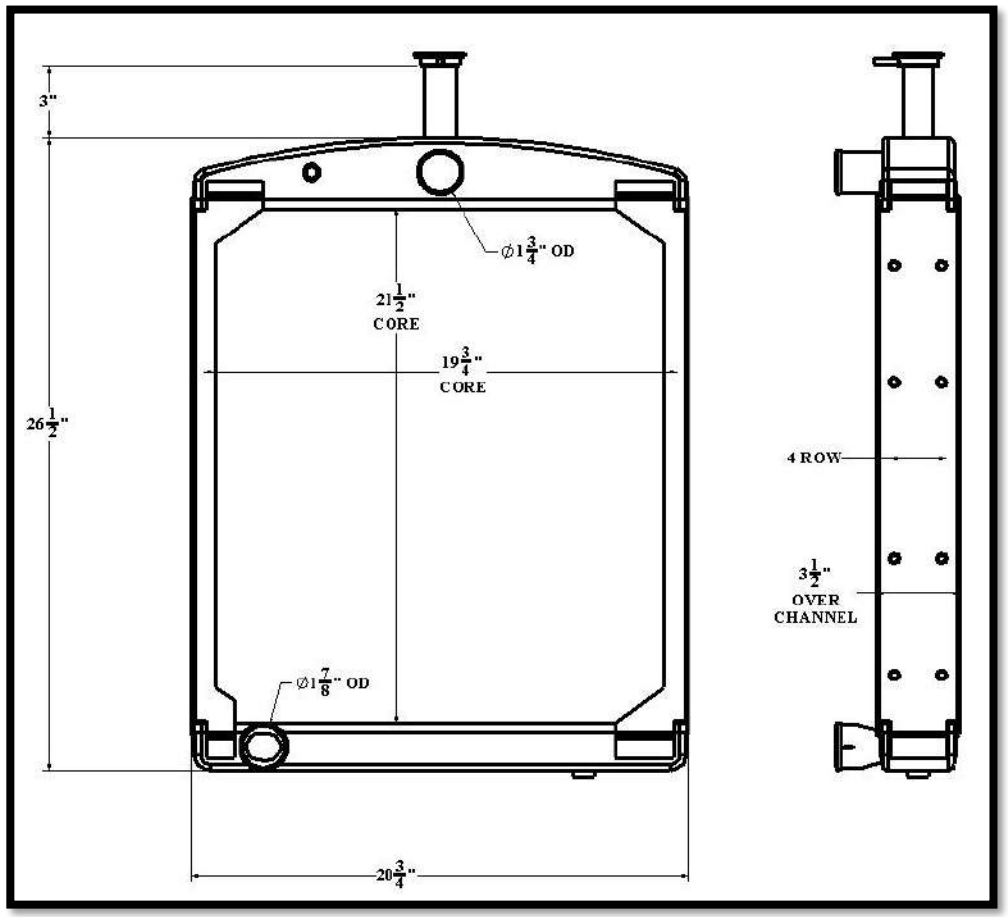

Overall Dimensions: 26-1/2” X 20-3/4” X 3-1/2”
Core: 21-1/2” X 19-3/4” X 4 ROW
Inlet: 1-3/4” OD
Outlet: 1-7/8” OD

Listed dimensions may vary slightly from OE

BGR Part Number: ST-0239-6T-NC
JOHN DEERE 644, AT224106R

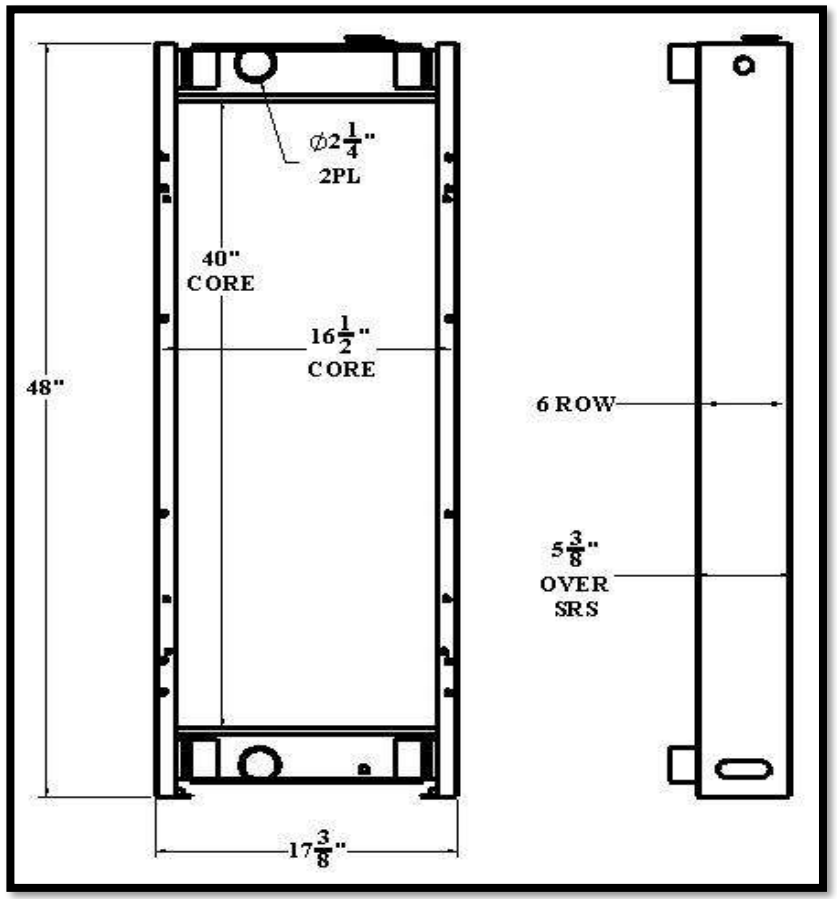

Overall Dimensions: 48” X 17-3/8” X 5-3/8”
Core: 40” X 16-1/2” X 6 ROW
Inlet: 2-1/4” OD
Outlet: 2-1/4” OD

Tel 1.800.774.2168
www.bgrradiator.com

BGR Part Number: ST-0240-4VTW-B
GEHL 4610 SKID STEER RS1939

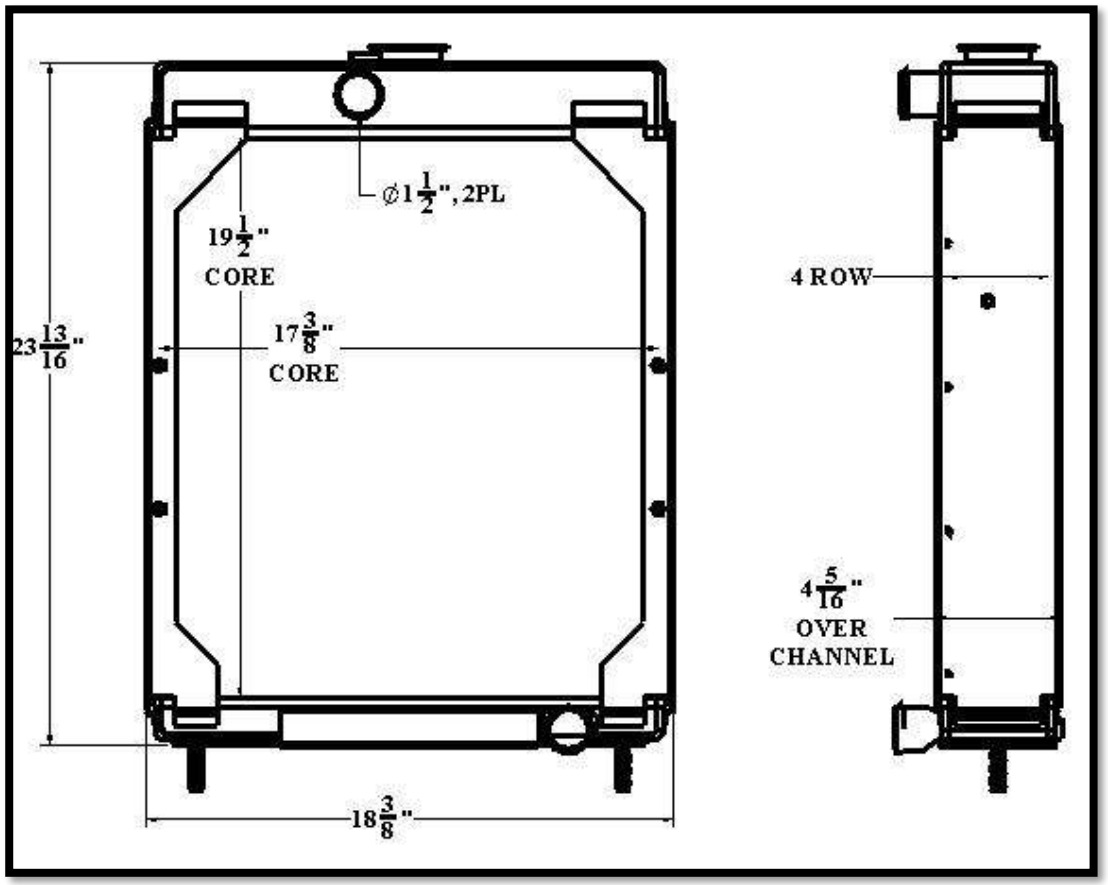

Overall Dimensions: 23-13/16” X 18-3/8” X 4-5/16”
Core: 19-1/2” X 17-3/8” X 4 ROW
Inlet: 1-1/2” OD
Outlet: 1-1/2” OD

Listed dimensions may vary slightly from OE

BGR Part Number: ST-0241-4R-B
SCAG MOWER, YOUNG 358090

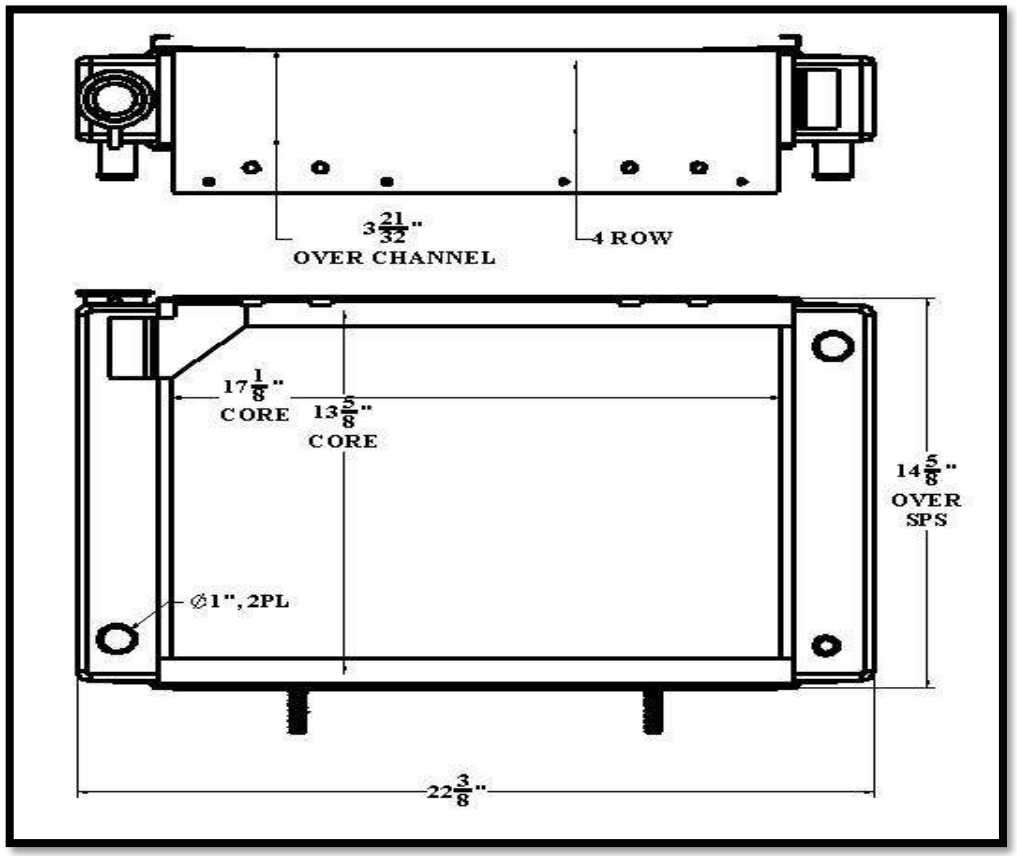

Overall Dimensions: 14-5/8” X 22-3/8” X 3-21/32”
Core: 13-5/8” X 17-1/8” X 4 ROW
Inlet: 1” OD
Outlet: 1” OD

Tel 1.800.774.2168
www.bgrradiator.com

BGR Part Number: ST-0242-5N-NC
1A12336, 031285, RE20981

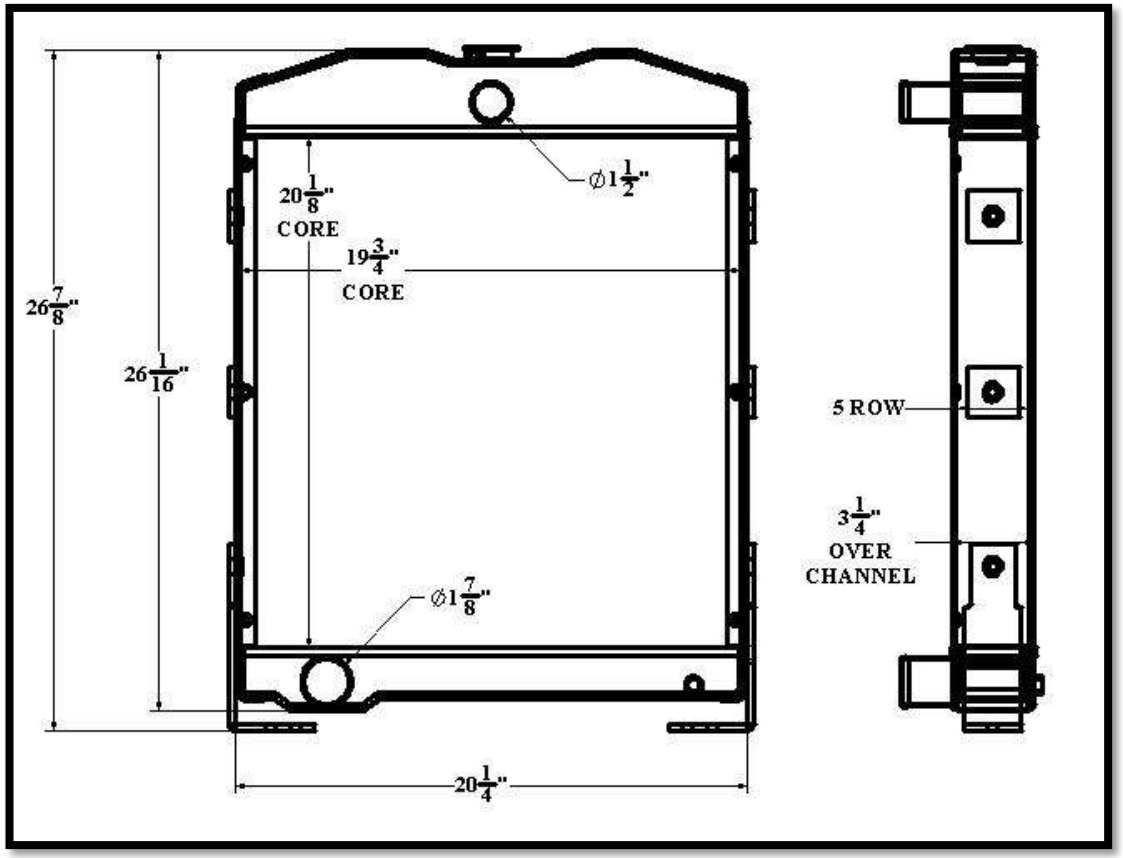

Overall Dimensions: 26-1/16” X 20-1/4” X 3-1/4”
Core: 20-1/8” X 19-3/4” X 5 ROW
Inlet: 1-1/2” OD
Outlet: 1-7/8” OD

Listed dimensions may vary slightly from OE

BGR Part Number: ST-0243-5N-NC
A-255605

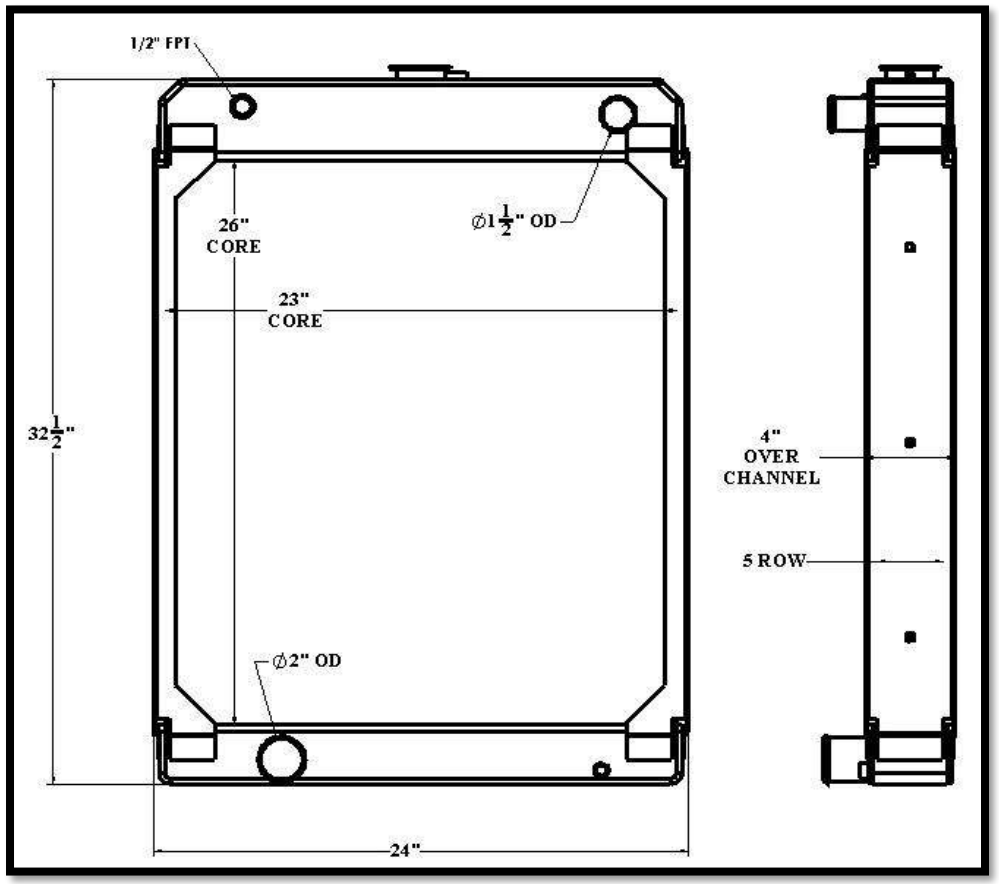

Overall Dimensions: 32-1/2” X 24” X 4”
Core: 26” X 23” X 5 ROW
Inlet: 1-1/2” OD
Outlet: 2” OD

Tel 1.800.774.2168
www.bgrradiator.com

BGR Part Number: ST-0244-4Y-NC
LULL 644

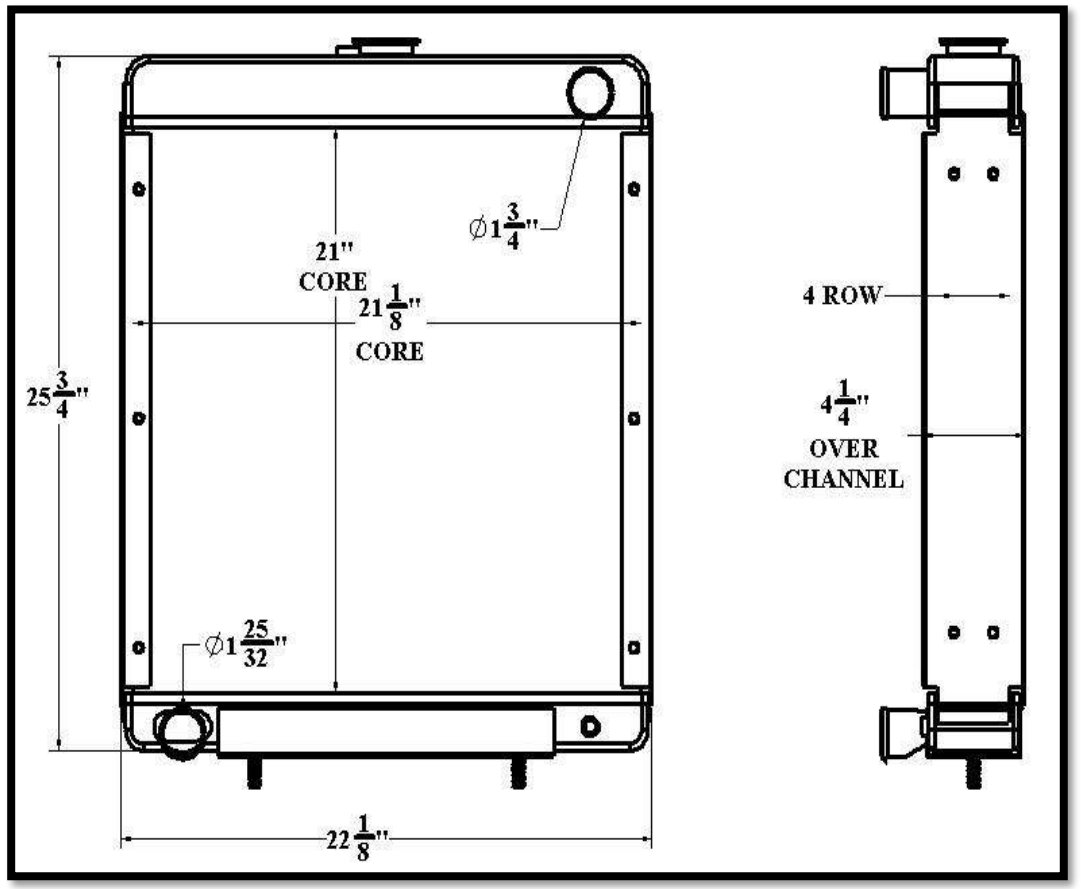

Overall Dimensions: 25-3/4” X 22-1/8” X 4-1/4”
Core: 21” X 21-1/8” 4 ROW
Inlet: 1-3/4” OD
Outlet: 1-25/32” OD

Listed dimensions may vary slightly from OE

BGR Part Number: ST-0245

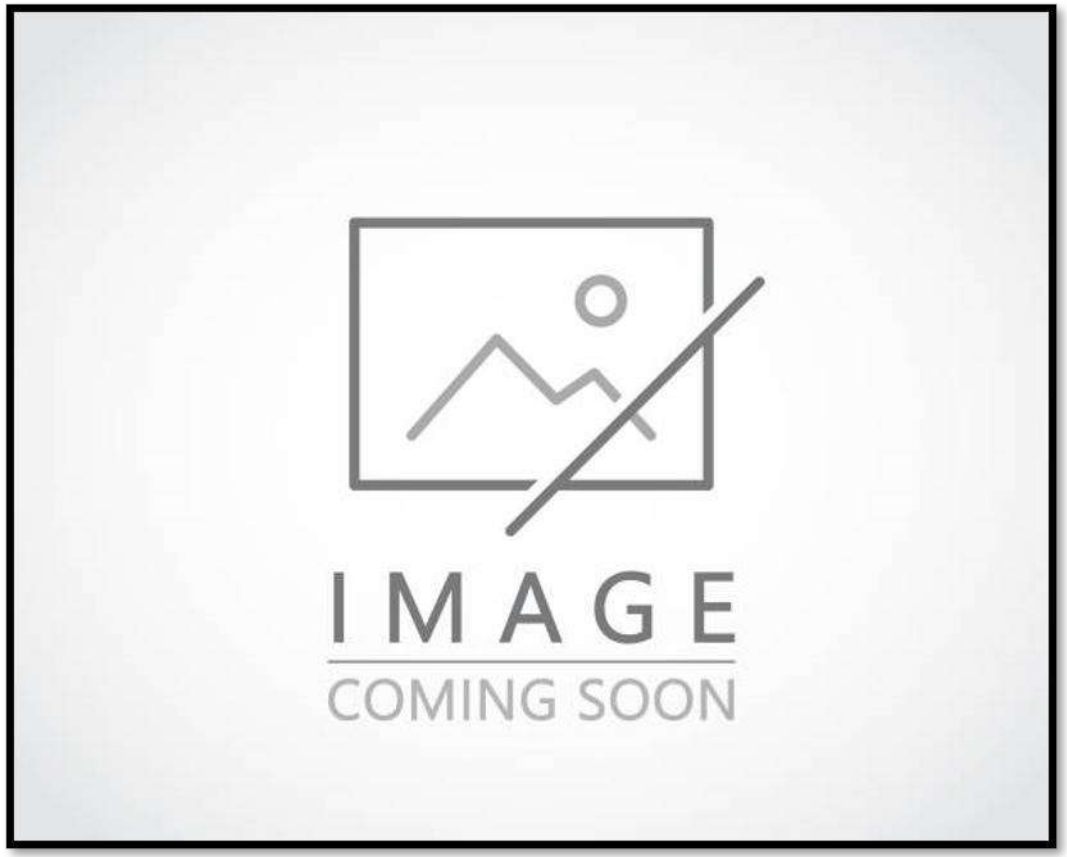

Overall Dimensions:
Core:
Inlet:
Outlet:

Tel 1.800.774.2168
www.bgrradiator.com

BGR Part Number: ST-0246-5N-B
BRUSH BANDIT 100

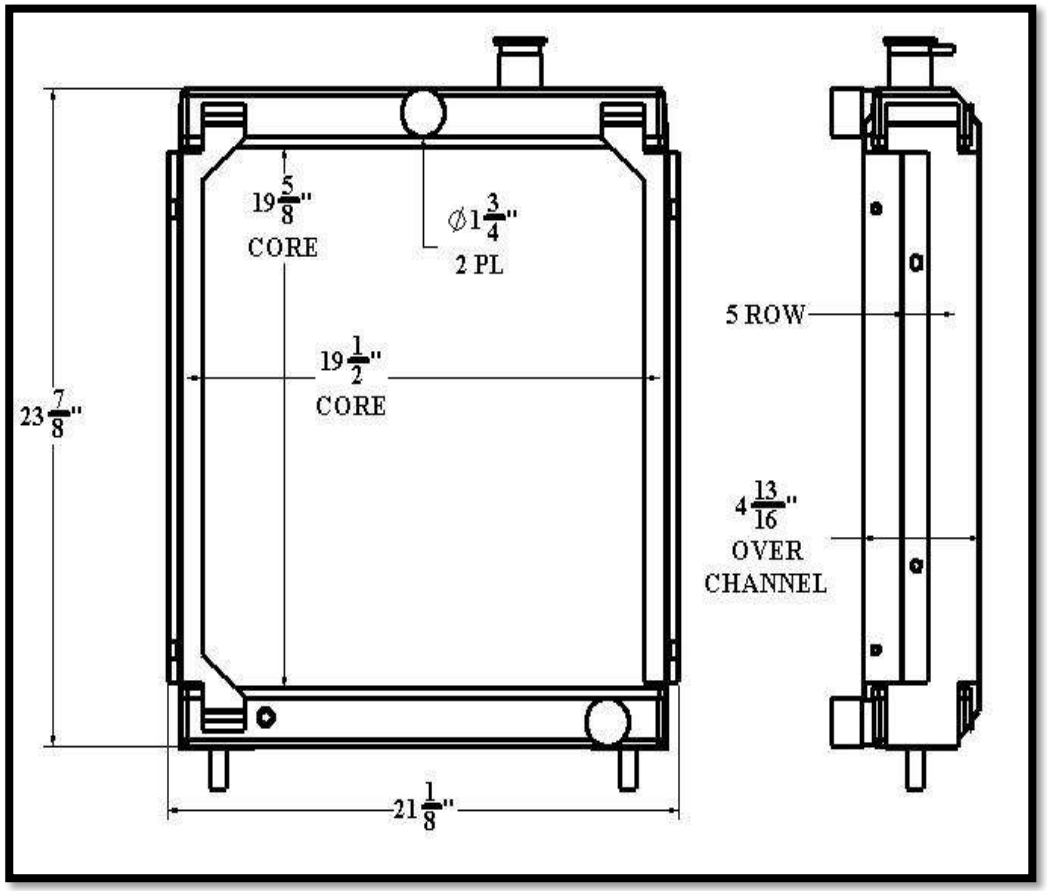

Overall Dimensions: 23-7/8” X 21-1/8” X 4-13/16”
Core: 19-5/8” X 19-1/2” 5 ROW
Inlet: 1-3/4” OD
Outlet: 1-3/4” OD

Listed dimensions may vary slightly from OE

BGR Part Number: ST-0247-6X-EF
OC 01-0188, APN: 27-0912

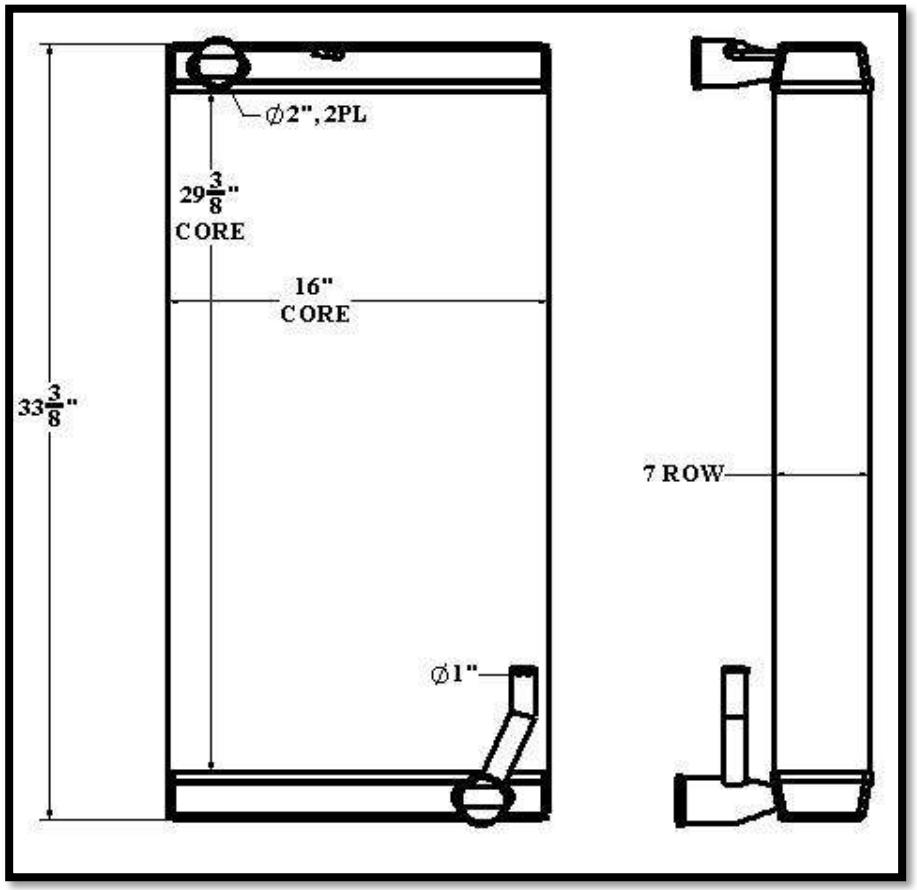

Overall Dimensions: 33-3/8” X 16” X 4”
Core: 29-3/8” X 16” X 7 ROW
Inlet: 2” OD
Outlet: 1” OD

Tel 1.800.774.2168
www.bgrradiator.com

BGR Part Number: ST-0248-5N-NC
1A11266, AT75227

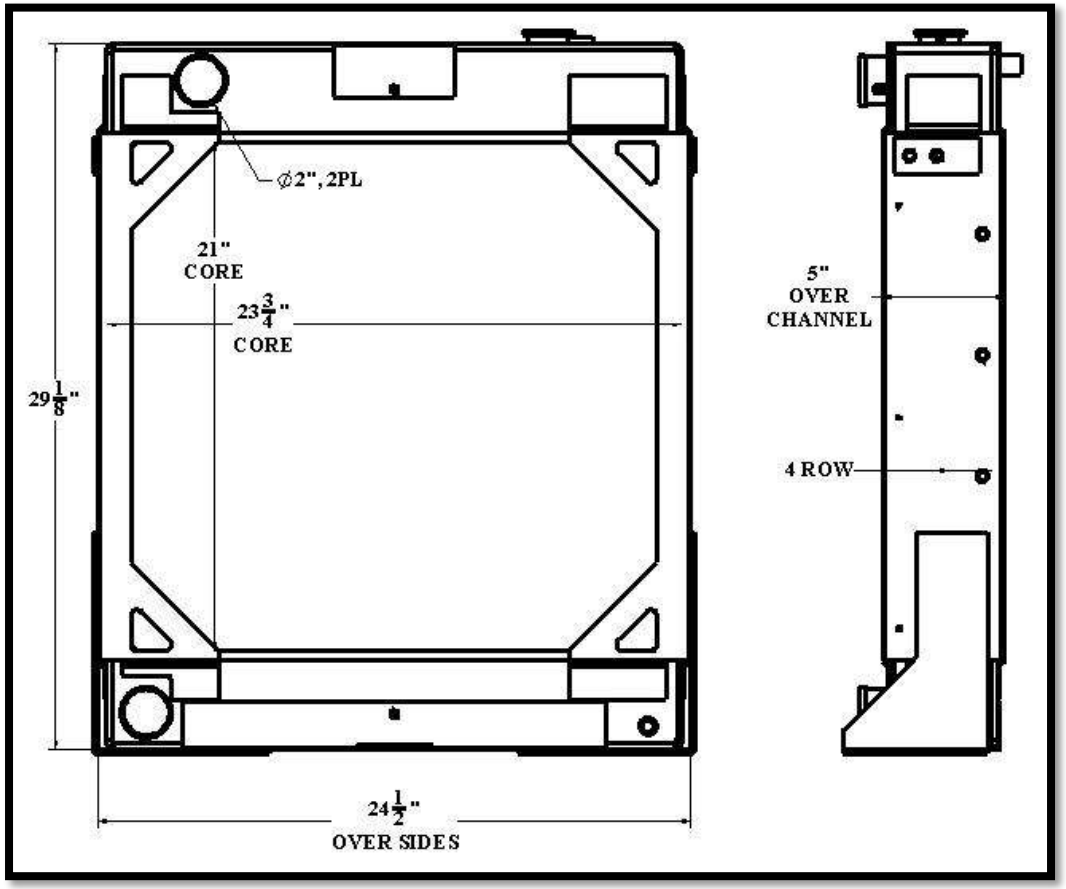

Overall Dimensions: 29-1/8” X 24-1/2” X 5”
Core: 21” X 23-3/4” X 4 ROW
Inlet: 2” OD
Outlet: 2” OD

Listed dimensions may vary slightly from OE

BGR Part Number: ST-0249-3X-F

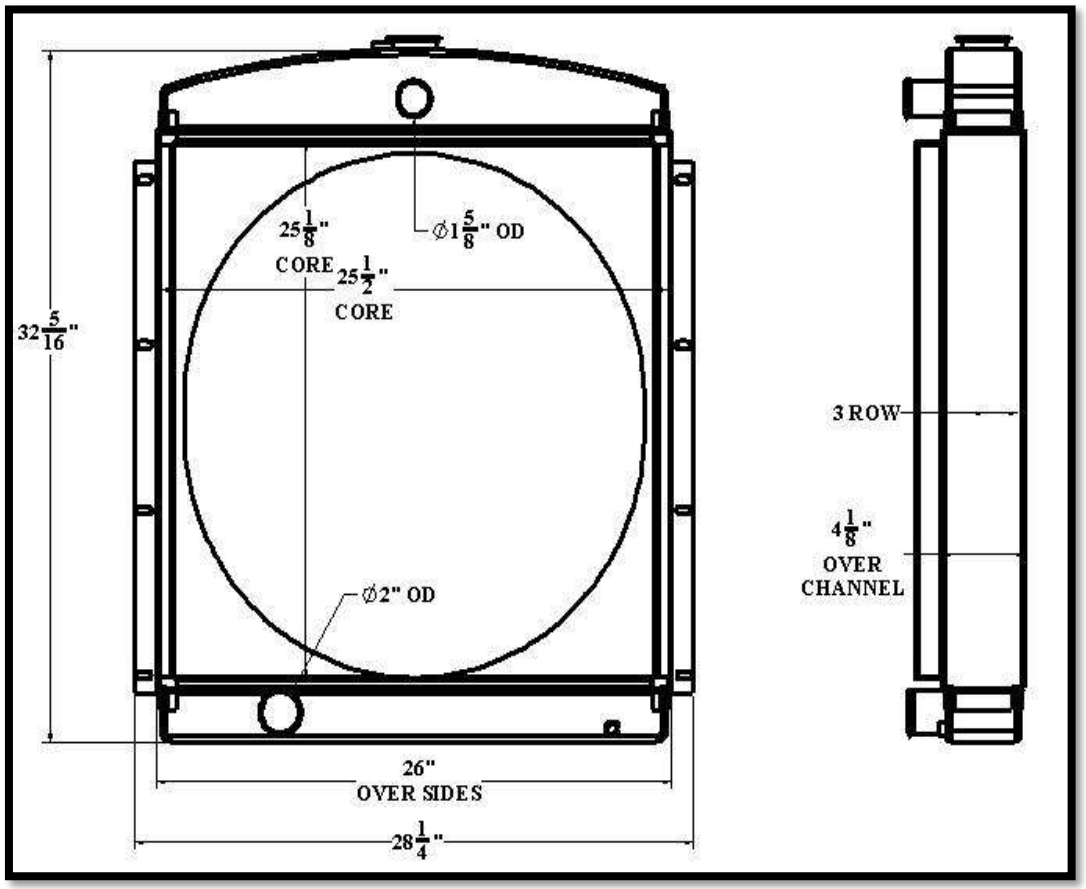

Overall Dimensions: 32-5/16” X 28-1/4” X 4-1/8”
Core: 25-1/8” X 25-1/2” X 3 ROW
Inlet: 1-5/8” OD
Outlet: 2” OD

Tel 1.800.774.2168
www.bgrradiator.com

BGR Part Number: ST-0250-6R-F
CATERPILLAR CS-553 ROLLER

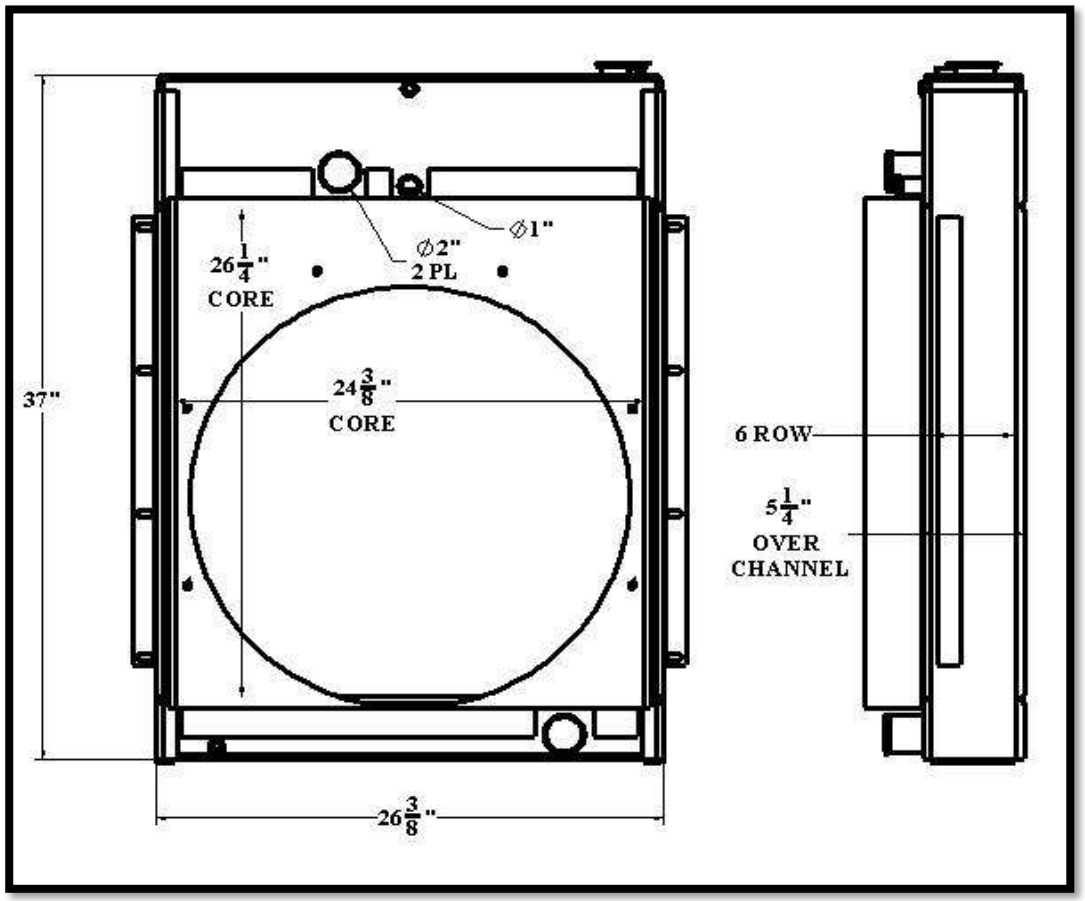

Overall Dimensions: 37” X 26-3/8” 5-1/4”
Core: 26-1/4” X 24-3/8” X 6 ROW
Inlet: 2” OD
Outlet: 2” OD

Listed dimensions may vary slightly from OE

BGR Part Number: ST-0251-3P-B
INGERSOLL RAND ROLLER

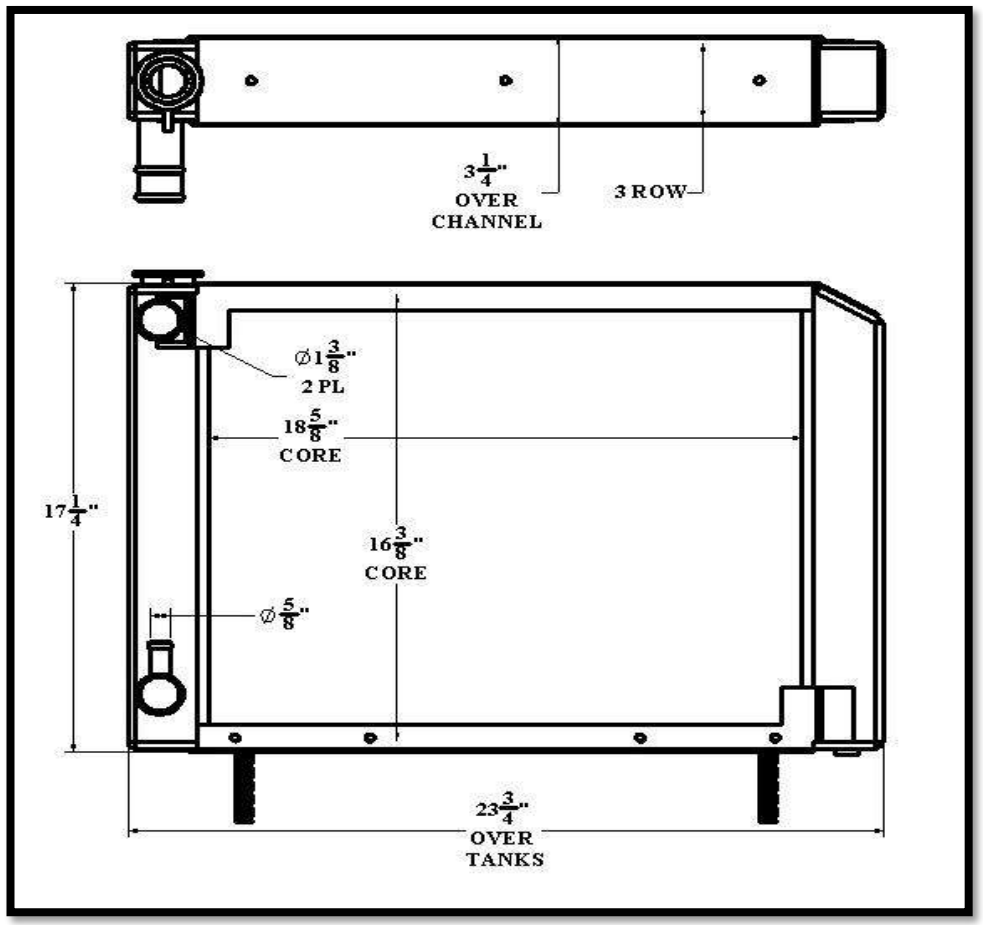

Overall Dimensions: 17-1/4” X 23-3/4” X 3-1/4”
Core: 16-3/8” X 18-5/8” X 3 ROW
Inlet: 1-3/8” OD
Outlet: 1-3/8” OD

Tel 1.800.774.2168
www.bgrradiator.com

BGR Part Number: ST-0252-4N-B
RDI80051BB, 45751

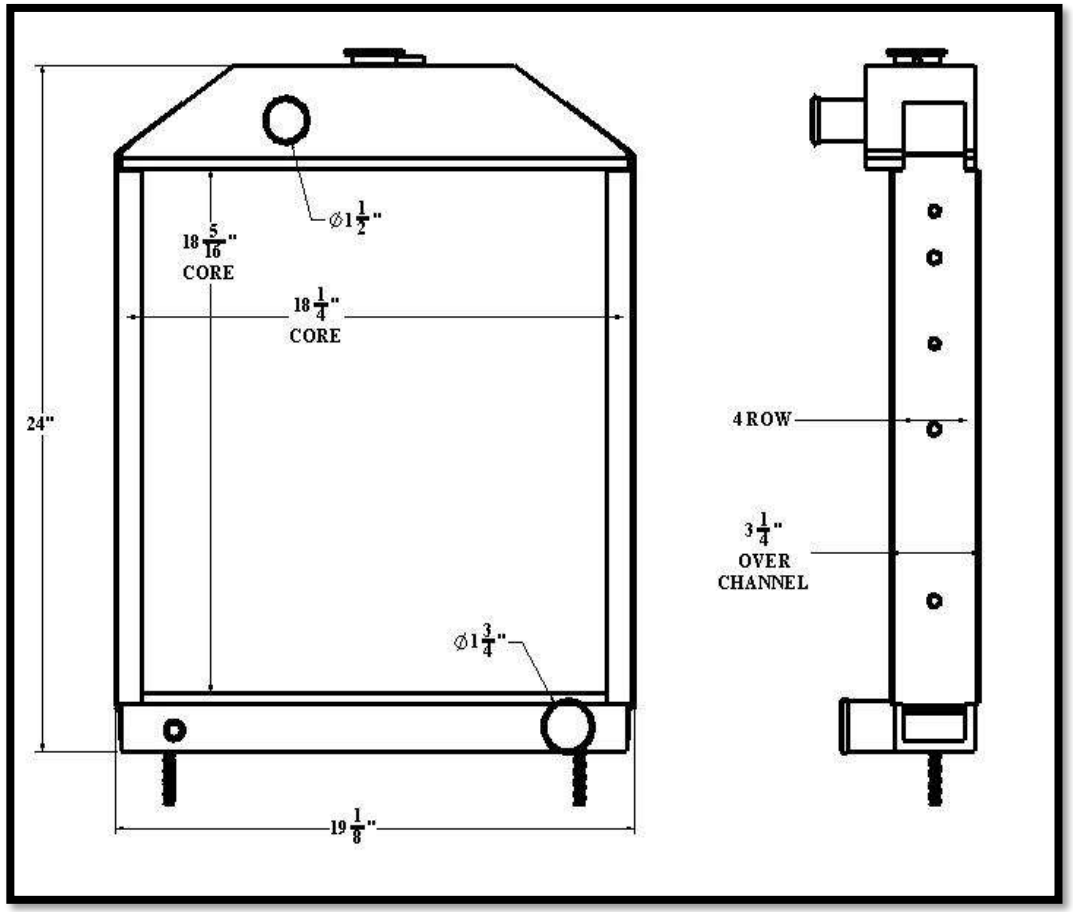

Overall Dimensions: 24” X 19-1/8” X 3-1/4”
Core: 18-5/16” X 18-1/4” X 4 ROW
Inlet: 1-1/2” OD
Outlet: 1-3/4” OD

Listed dimensions may vary slightly from OE

BGR Part Number: ST-0253-3VT-NC
ONAN 130-7834

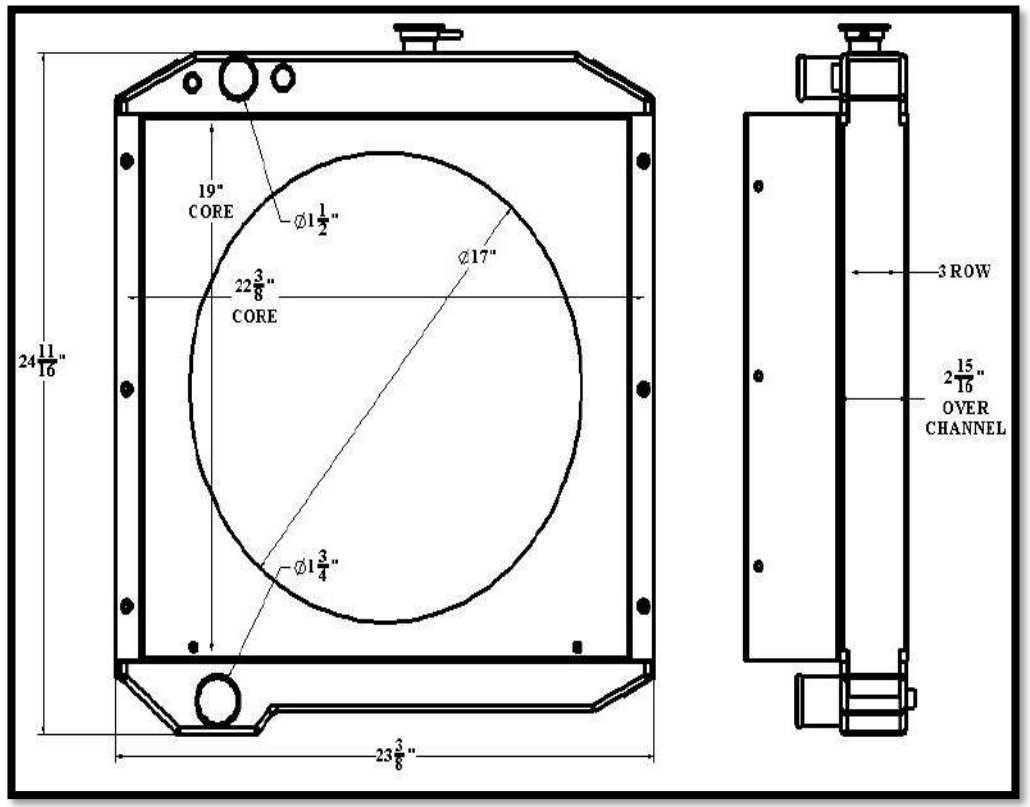

Overall Dimensions: 24-11/16” X 32-3/8” X 2-15/16”
Core: 19” X 22-3/8” X 3 ROW
Inlet: 1-1/2” OD
Outlet: 1-3/4” OD

Tel 1.800.774.2168
www.bgrradiator.com

BGR Part Number: ST-0254-5N-NC
1A17574, 0399077, 140160-0001

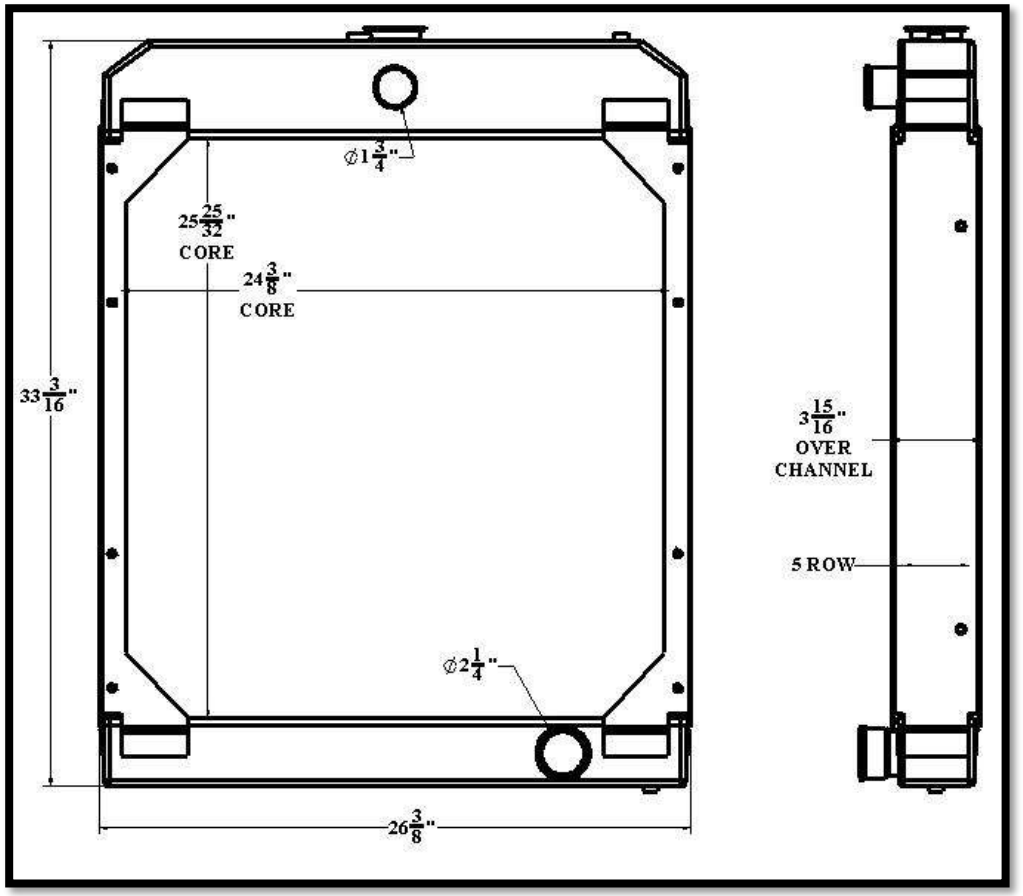

Overall Dimensions: 33-3/16” X 36-3/8” X 3-15/16”
Core: 25-25/32” X 24-3/8” X 5 ROW
Inlet: 1-3/4” OD
Outlet: 2-1/4” OD

Listed dimensions may vary slightly from OE

BGR Part Number: ST-0255-4M-NC

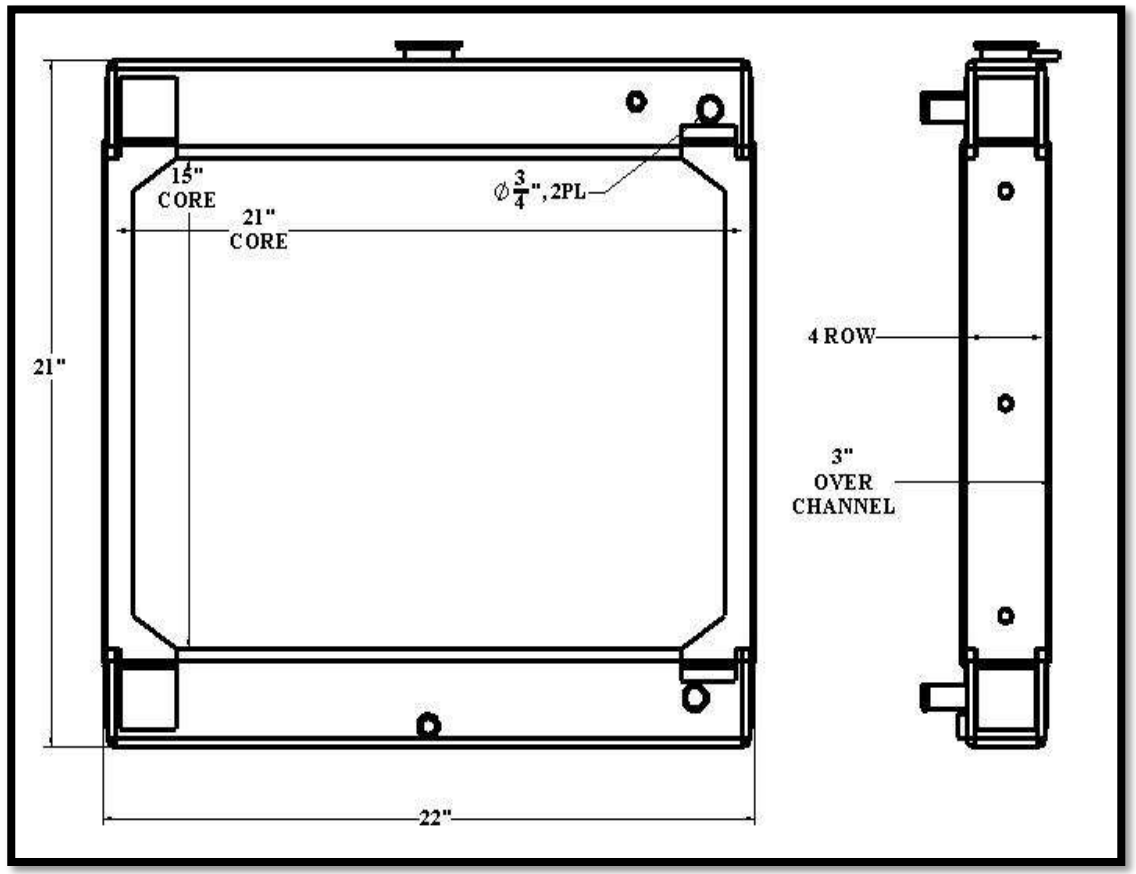

Overall Dimensions: 21” X 22” X 3”
Core: 15” X 21” X 4 ROW
Inlet: ¾” OD
Outlet: ¾” OD

Tel 1.800.774.2168
www.bgrradiator.com

BGR Part Number: ST-0256-4VT-NC
GENERAC 0C27110SRV

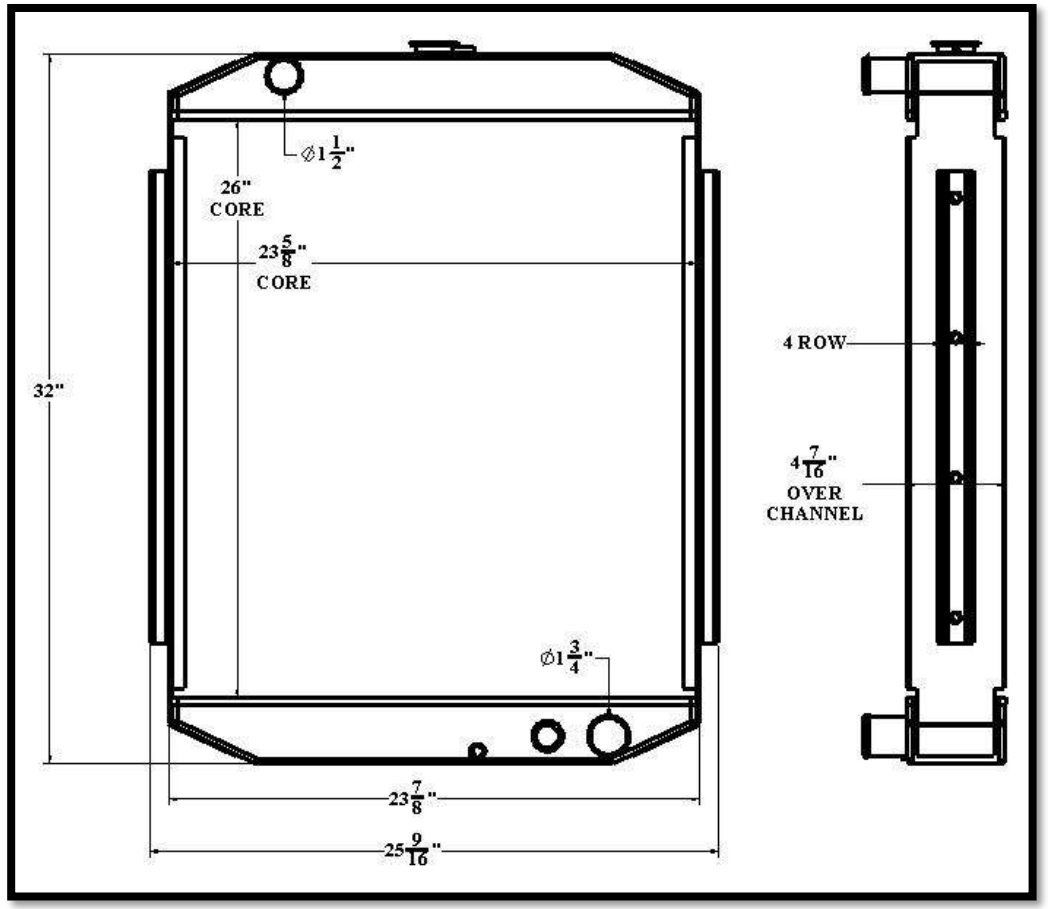

Overall Dimensions: 32” X 25-9/16” X 4-7/16”
Core: 26” X 23-5/8” X 4 ROW
Inlet: 1-1/2” OD
Outlet: 1-3/4” OD

Listed dimensions may vary slightly from OE

BGR Part Number: ST-0257-4VT-NC
T RAD PROD# APN5-00041, T RAD C771-002

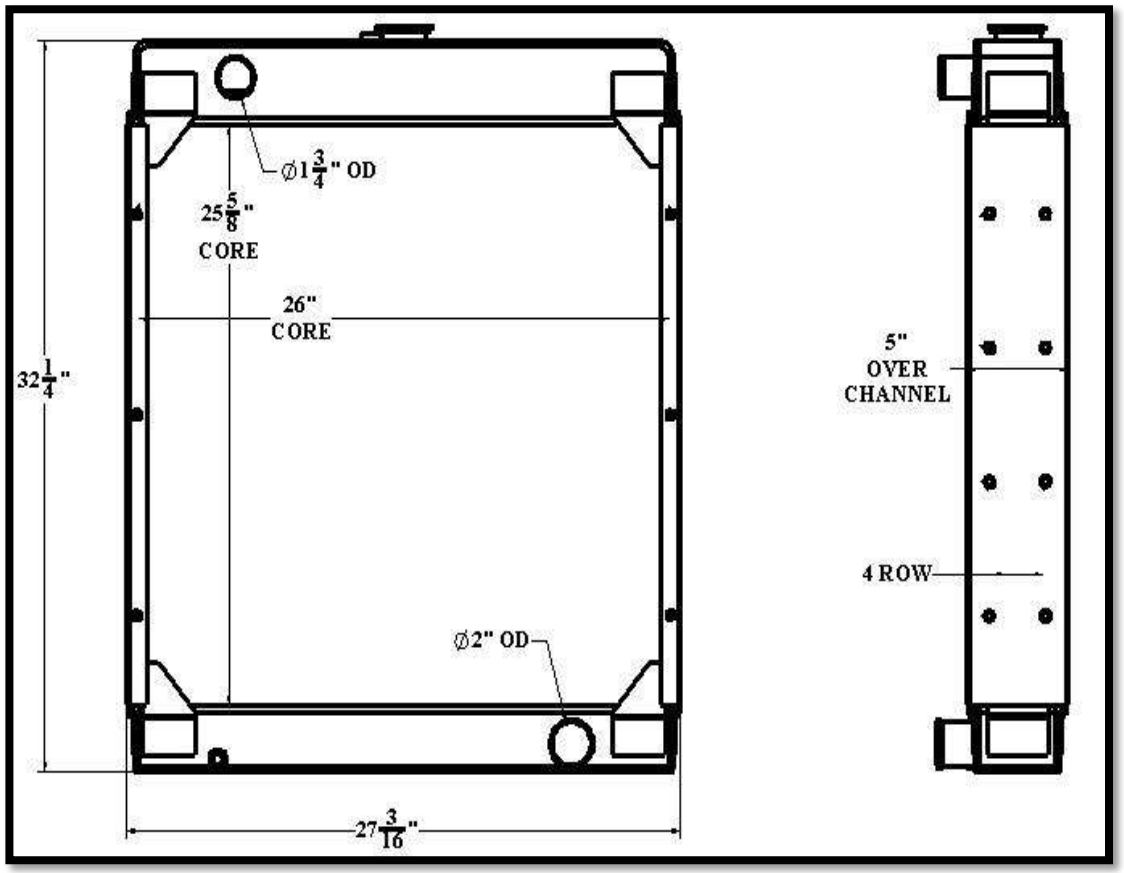

Overall Dimensions: 32-1/4” X 27-3/16 X 5”
Core: 25-5/8” 26” X 4 ROW
Inlet: 1-3/4” OD
Outlet: 2” OD

Tel 1.800.774.2168
www.bgrradiator.com

BGR Part Number: ST-0258-5J-EF
EXTEC CRUSHER

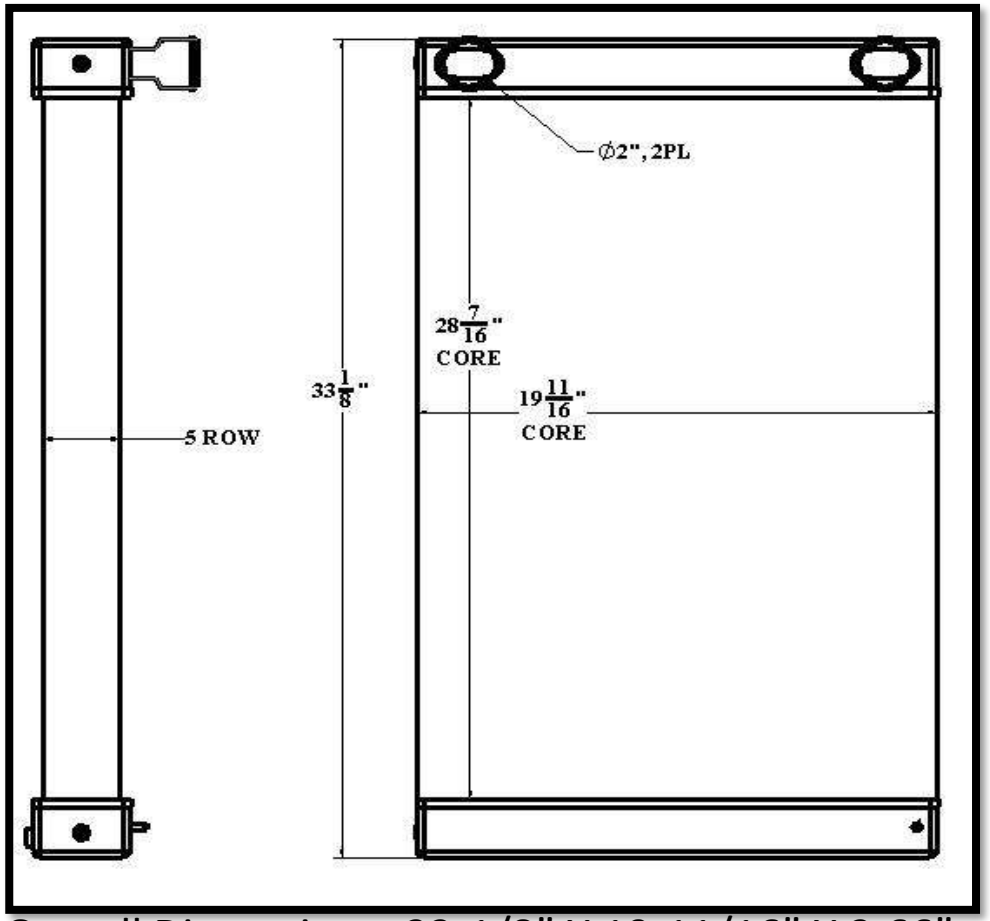

Overall Dimensions: 33-1/8” X 19-11/16” X 3.66”
Core: 28-7/16” X 19-11/16” X 5 ROW
Inlet: 2” OD
Outlet: 2” OD

ST257

Listed dimensions may vary slightly from OE

ST258

BGR Part Number: ST-0259-2VTU-F
GENERAC 070836A

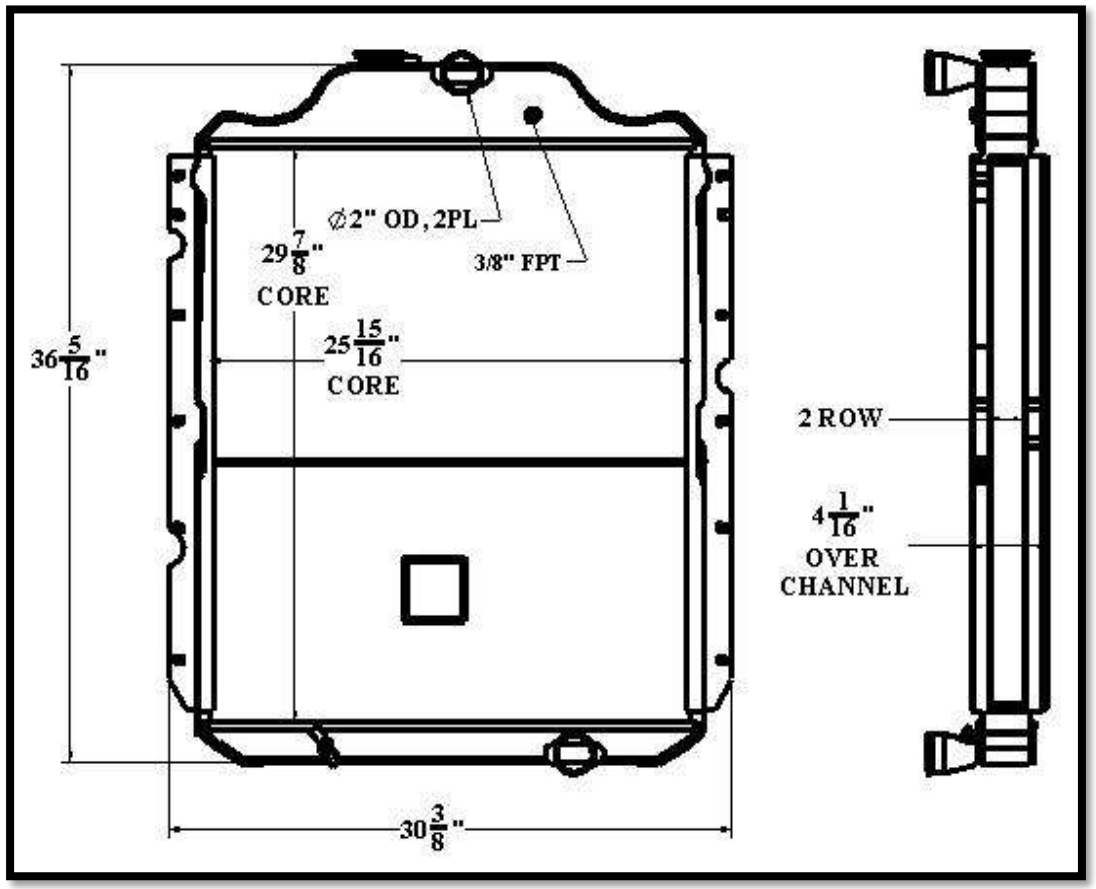

Overall Dimensions: 36-15/16” X 30-3/8” X 4-1/16”
Core: 29-7/8” X 25-15/16” X 2 ROW
Inlet: 2” OD
Outlet: 2” OD

Tel 1.800.774.2168
www.bgrradiator.com

BGR Part Number: ST-0260-5M-NC
CUMMINS 4BT

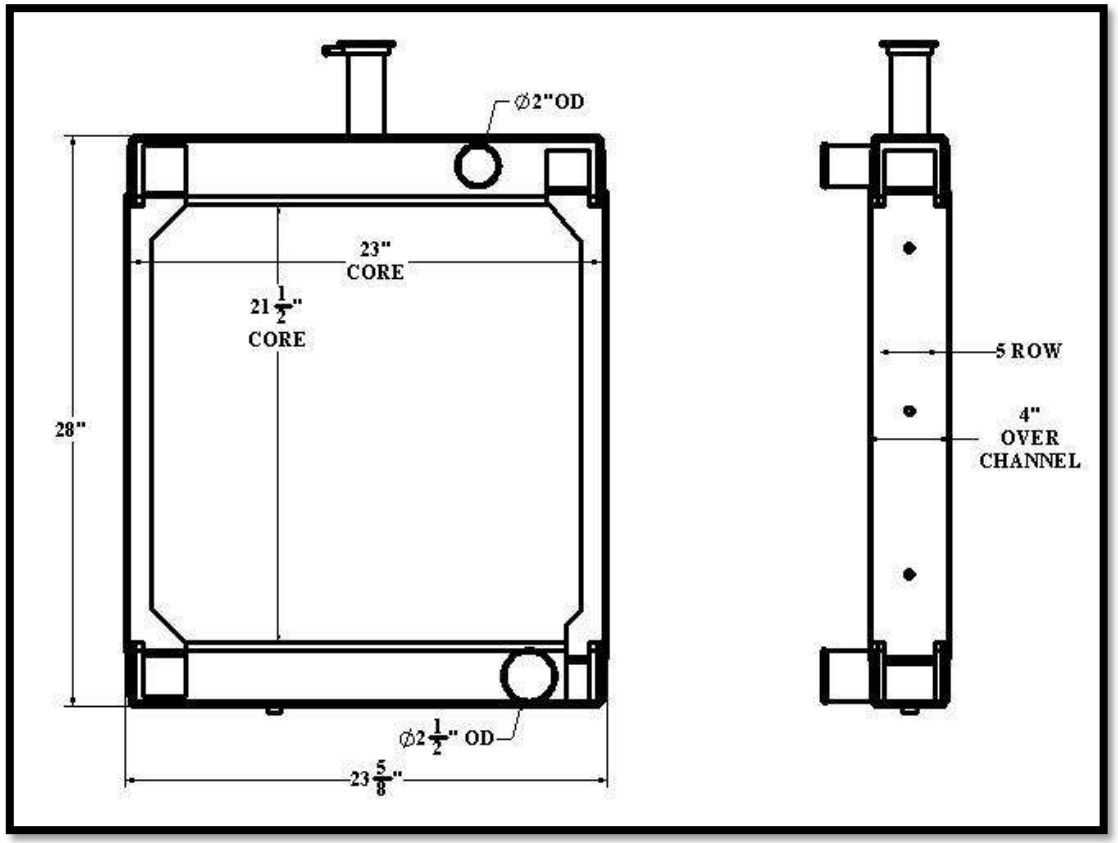

Overall Dimensions: 28” X 23-5/8” X 4”
Core: 21-1/2” X 23” X 5 ROW
Inlet: 2” OD
Outlet: 2-1/2” OD

ST259

Listed dimensions may vary slightly from OE

ST260

BGR Part Number: ST-0261-5N-NC
JOHN DEERE AT25116-obsolete

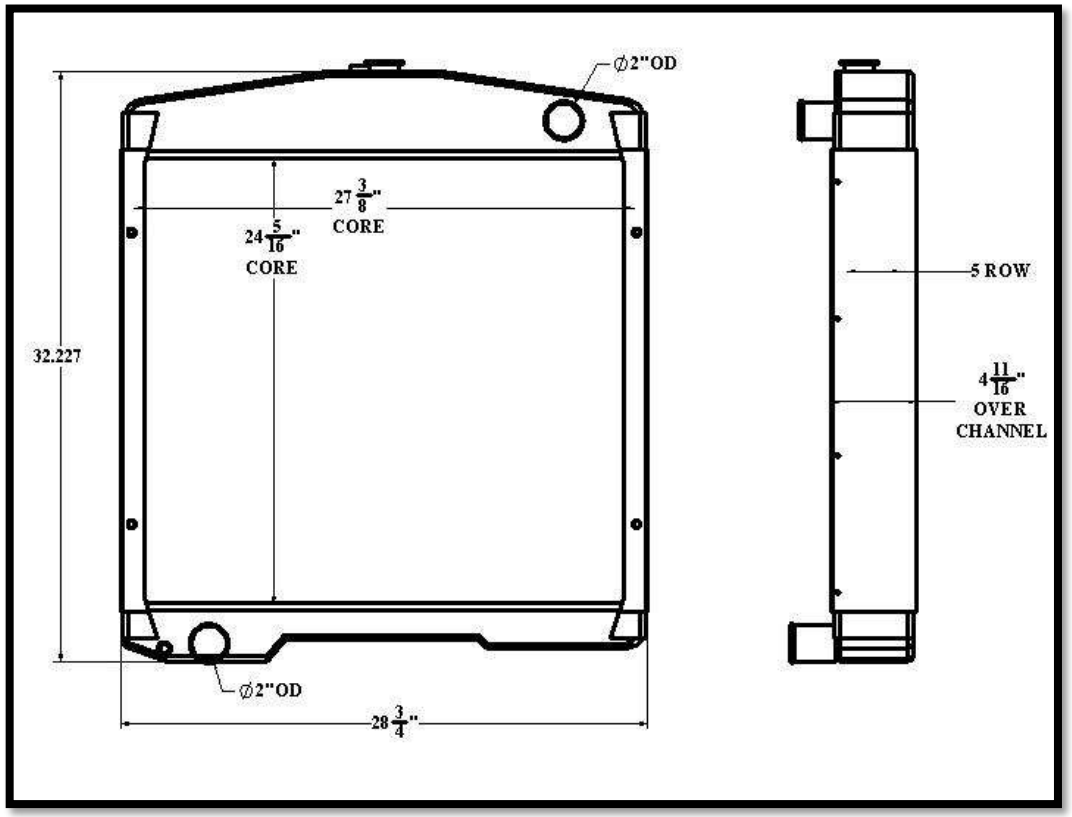

Overall Dimensions: 32.227” X 28-3/4” X 4-11/16”
Core: 24-5/16” X 27-3/8” X 5 ROW
Inlet: 2” OD
Outlet: 2” OD

Tel 1.800.774.2168
www.bgrradiator.com

BGR Part Number: ST-0262-4X-NC
JOHN DEERE AT208372, COPAR C241-035-0000-7

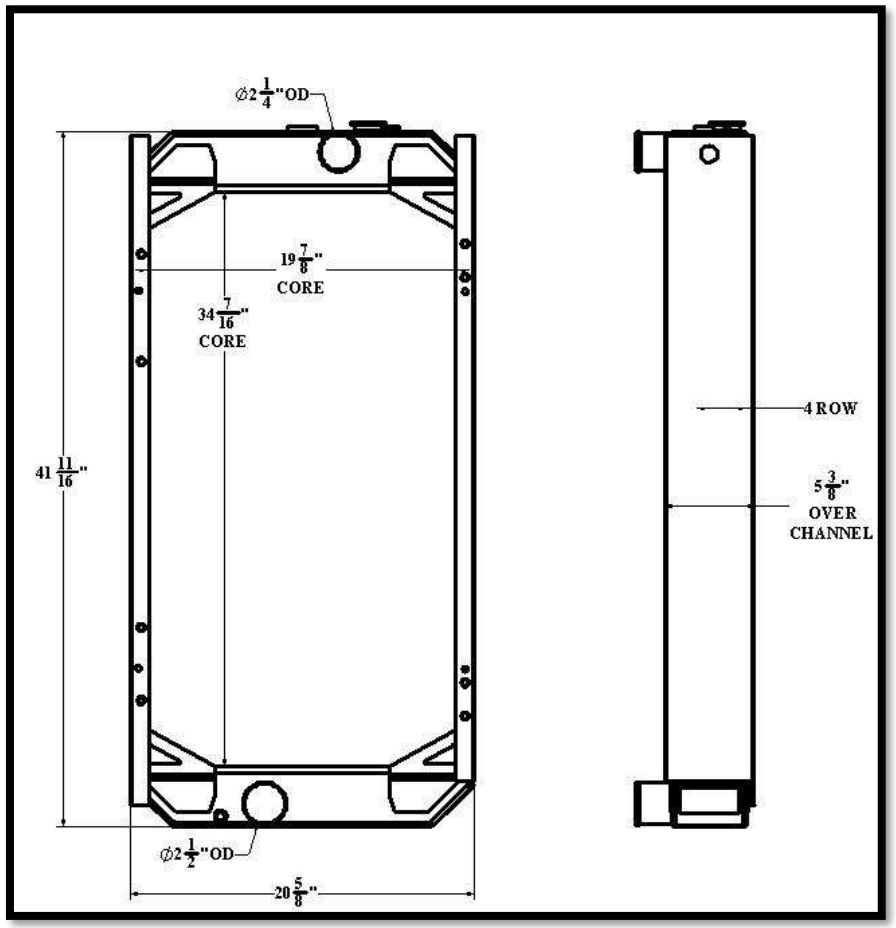

Overall Dimensions: 41-11/16” x 20-5/8” x 5-3/8”
Core: 34-7/16” X 19-7/8” X 4 ROW
Inlet: 2-1/4” OD
Outlet: 2-1/2” OD

Listed dimensions may vary slightly from OE

BGR Part Number: ST-0263-5I-F
INTERNATIONAL HARVESTER 603743C91, 415 031276

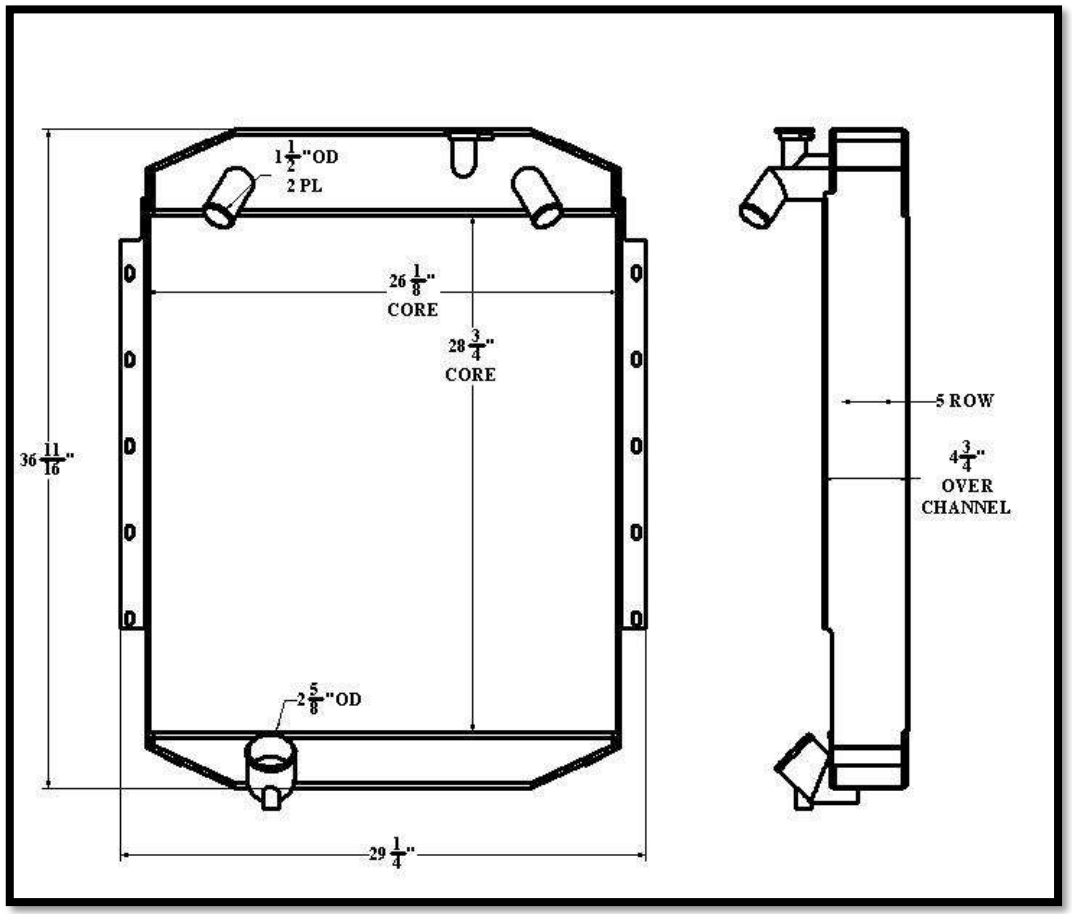

Overall Dimensions: 36-11/16” X 29-1/4” X 4-3/4”
Core: 26-1/8” X 28-3/4” X 5 ROW
Inlet: 1-1/2” OD 2 PL
Outlet: 2” OD

Tel 1.800.774.2168
www.bgrradiator.com

BGR Part Number: ST-0264-5I-NC
ROCORE PN: R21740, MODEL # SNO5-3, GM64504

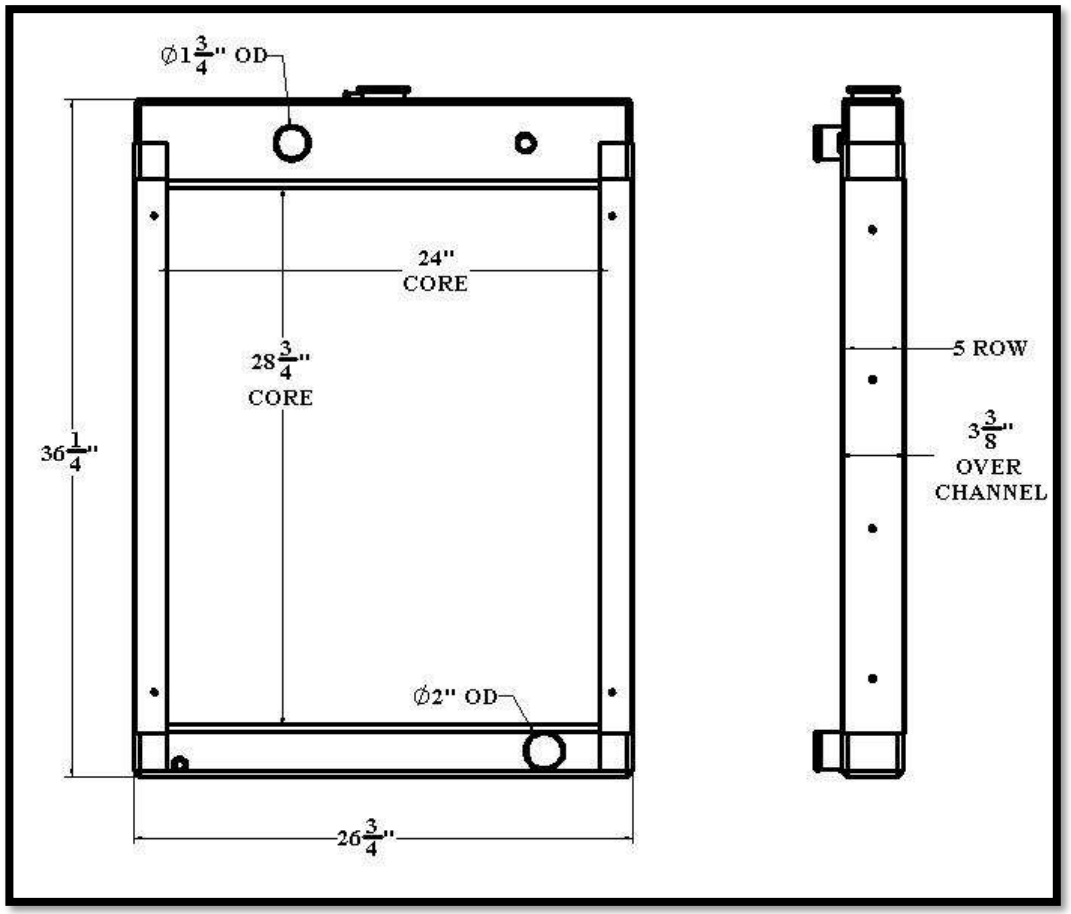

Overall Dimensions: 36-1/4” X 26-3/4” X 3-3/8”
Core: 28-3/4” X 24” X 5 ROW
Inlet: 1-3/4” OD
Outlet: 2” OD

ST263

Listed dimensions may vary slightly from OE

ST264

BGR Part Number: ST-0265-5P-F
GENERAC OD4902

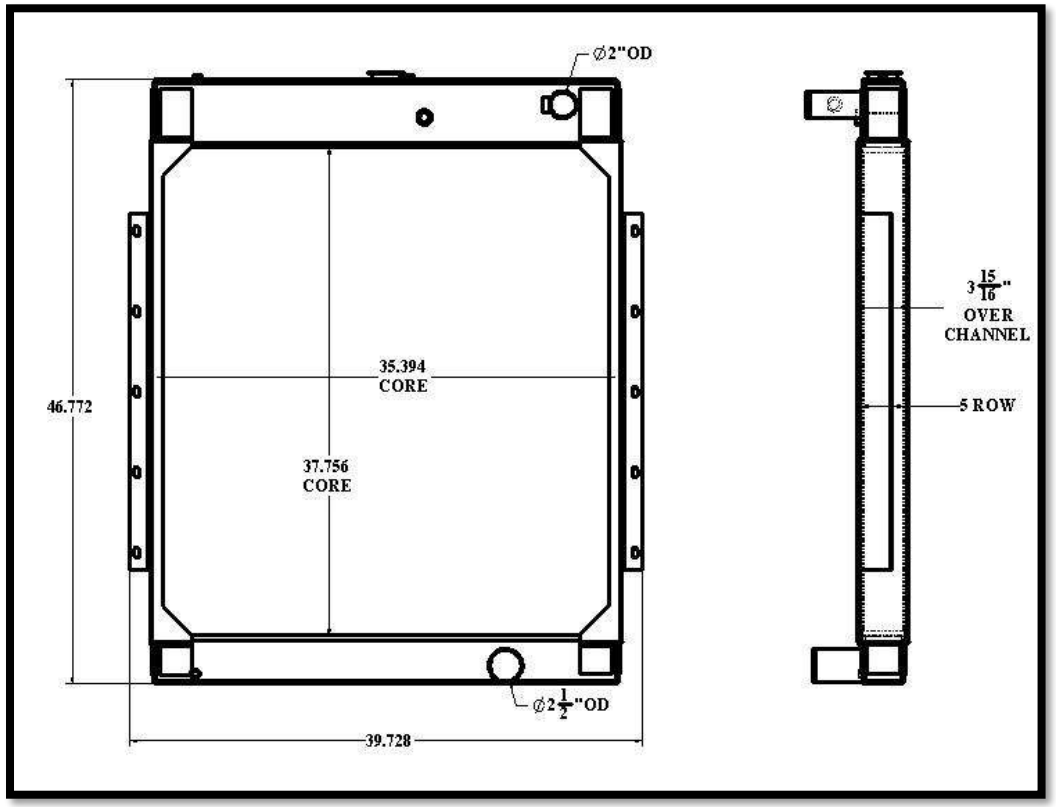

Overall Dimensions: 46.772” X 39.728” X 3-15/16”
Core: 37.756” X 35.394” X 5 ROW
Inlet: 2” OD
Outlet: 2-1/2” OD

Tel 1.800.774.2168
www.bgrradiator.com

BGR Part Number: ST-0266-8M-NC
GM49660, 10000-07725

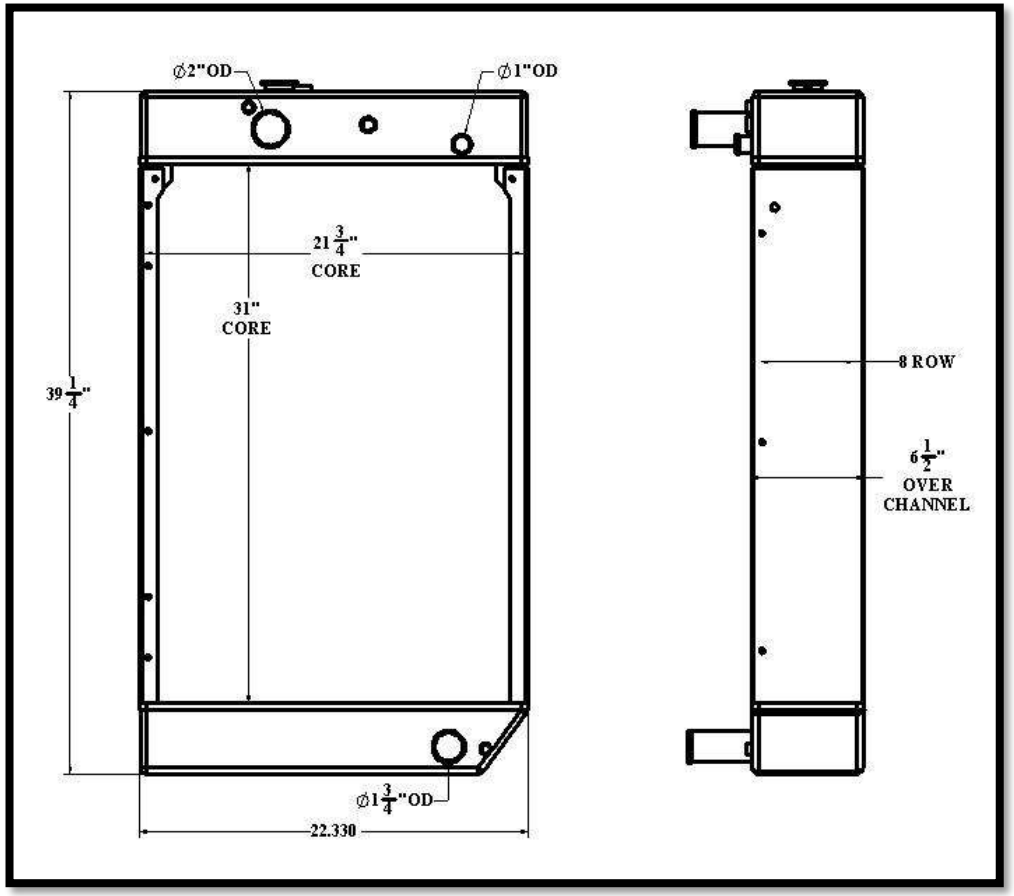

Overall Dimensions: 39-1/2” X 22.330” X 6-1/2”
Core: 31” X 21-3/4” X 5 ROW
Inlet: 2” OD, 1” OD
Outlet: 1-3/4”OD

ST265

Listed dimensions may vary slightly from OE

ST266

BGR Part Number: ST-0267-3VTM-F
GENERAC G097372

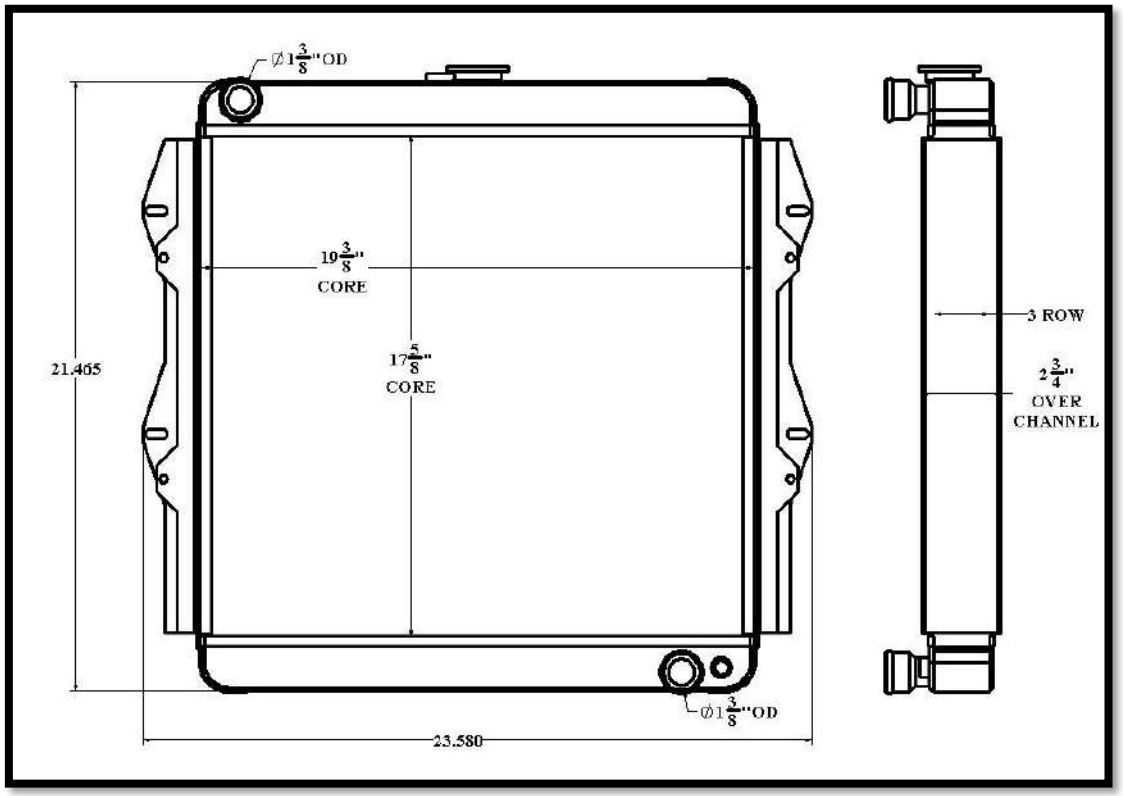

Overall Dimensions: 21.465” X 23.580” X 2-3/4”
Core: 17-5/8” X 19-3/8” X 3 ROW
Inlet: 1-3/8” OD
Outlet: 1-3/8” OD

Tel 1.800.774.2168
www.bgrradiator.com

BGR Part Number: ST-0268-6X-NC
JOHN DEERE AT102963

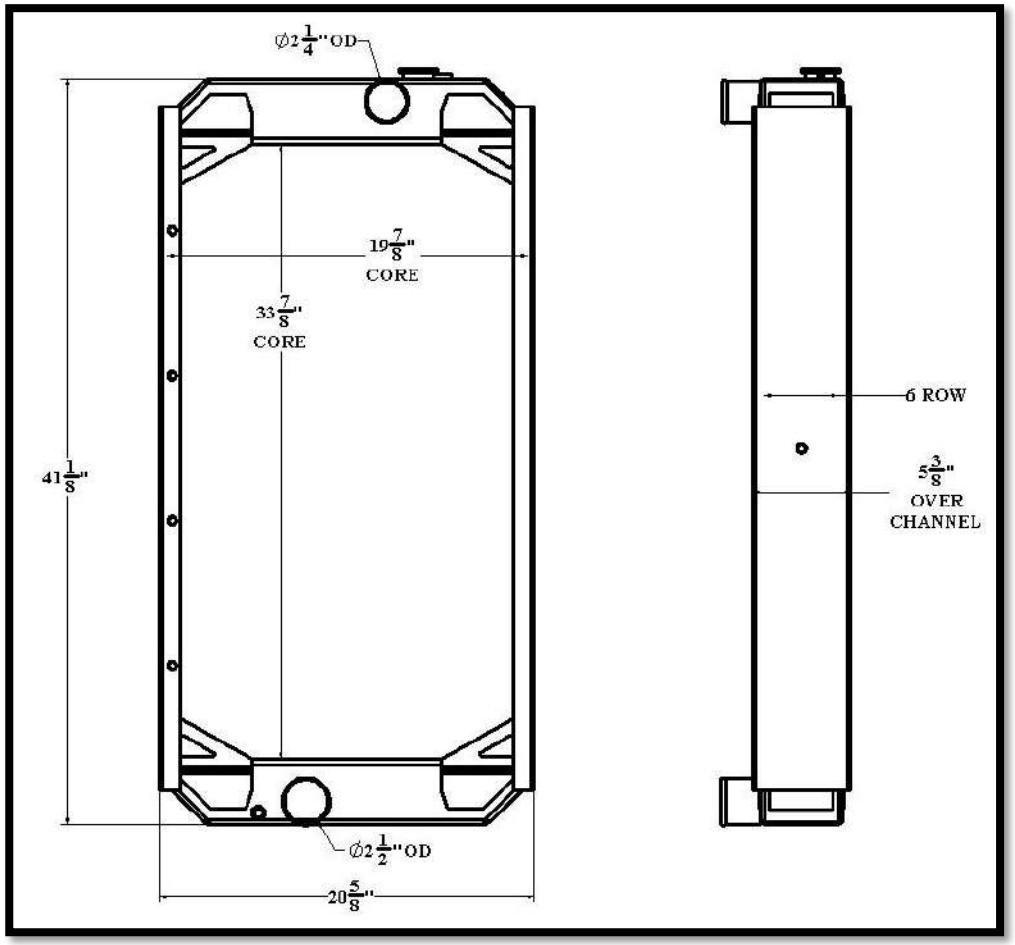

Overall Dimensions: 41-1/8” X 20-5/8” X 5-3/8”
Core: 33-7/8” X 19-7/8” X 6 ROW
Inlet: 2-1/4”
Outlet: 2-1/2”OD

Listed dimensions may vary slightly from OE

BGR Part Number: ST-0269-4M-NC
ONAN 130-2521

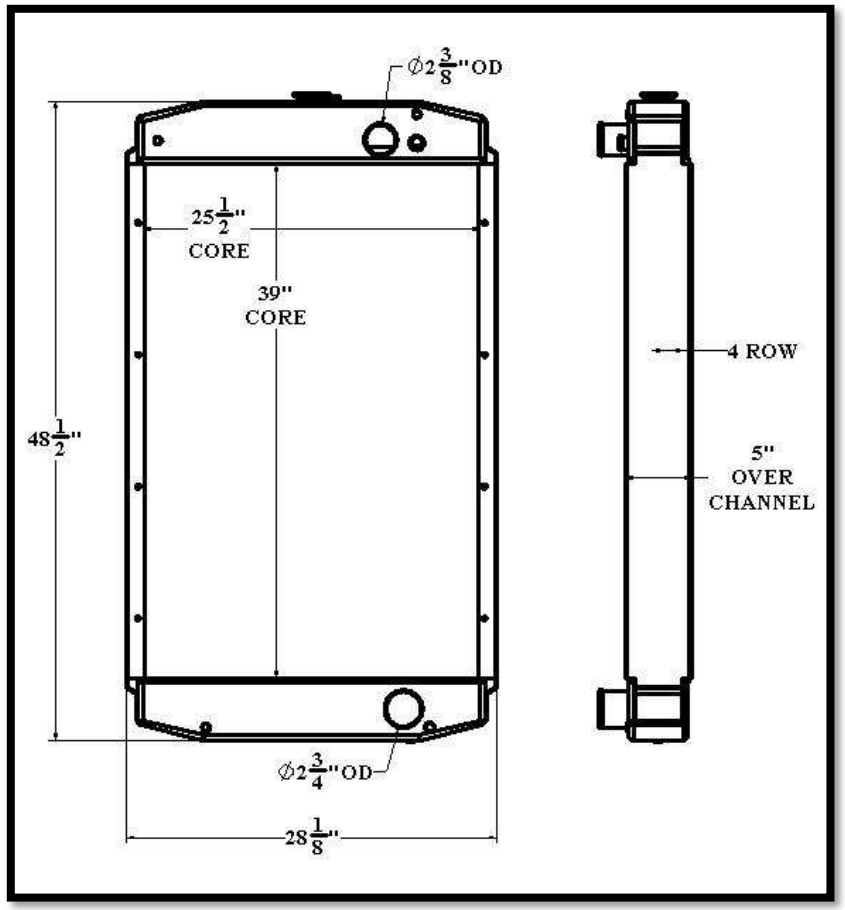

Overall Dimensions: 48-1/2” X 28-1/8” X 5”
Core: 39” X 25-1/2” X 4 ROW
Inlet: 2-3/8” OD
Outlet: 2-3/4” OD

Tel 1.800.774.2168
www.bgrradiator.com

BGR Part Number: ST-0270-5M-NC
MODINE 1A17486, KOHLER 180KOZJ

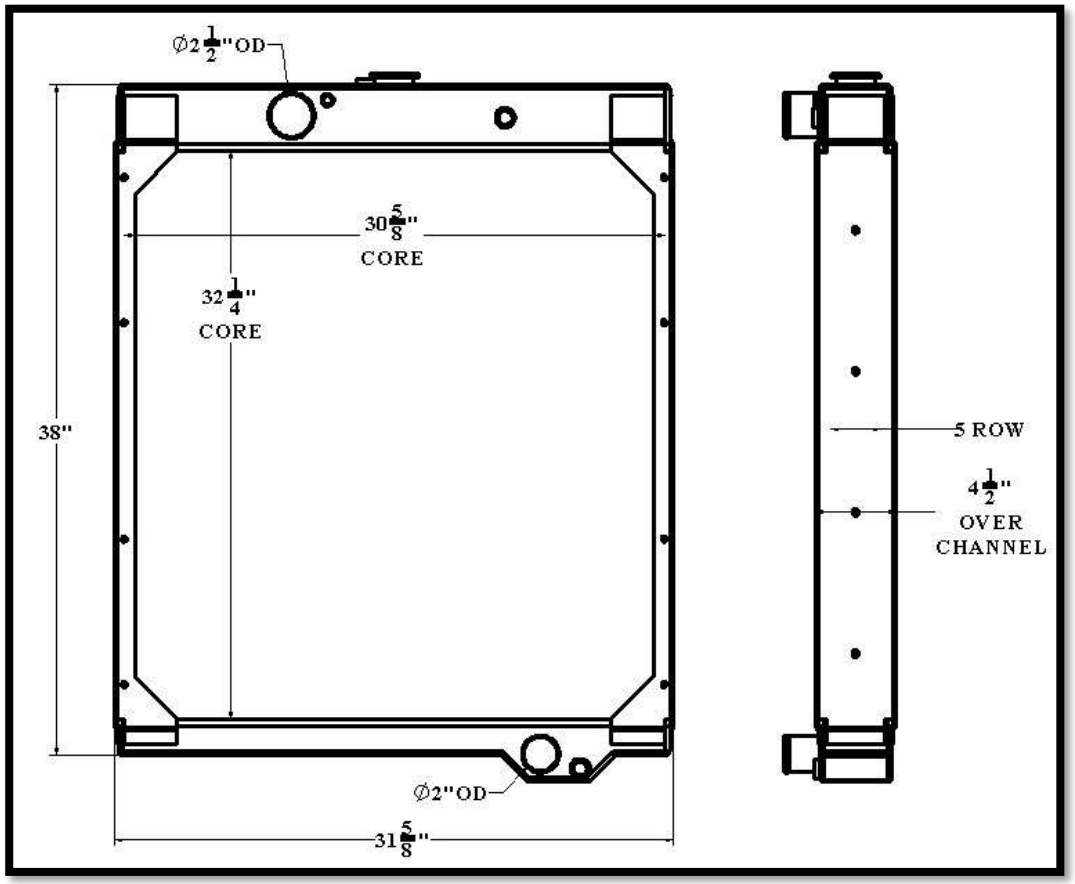

Overall Dimensions: 38” X 31-5/8” X 4-1/2”
Core: 32-1/4” X 30-5/8” X 5 ROW
Inlet: 2-1/2”
Outlet: 2”OD

Listed dimensions may vary slightly from OE

BGR Part Number: ST-0271-2VTU-NC
RADIATOR SPECIALTIES A-324008, SER DT 10837K004

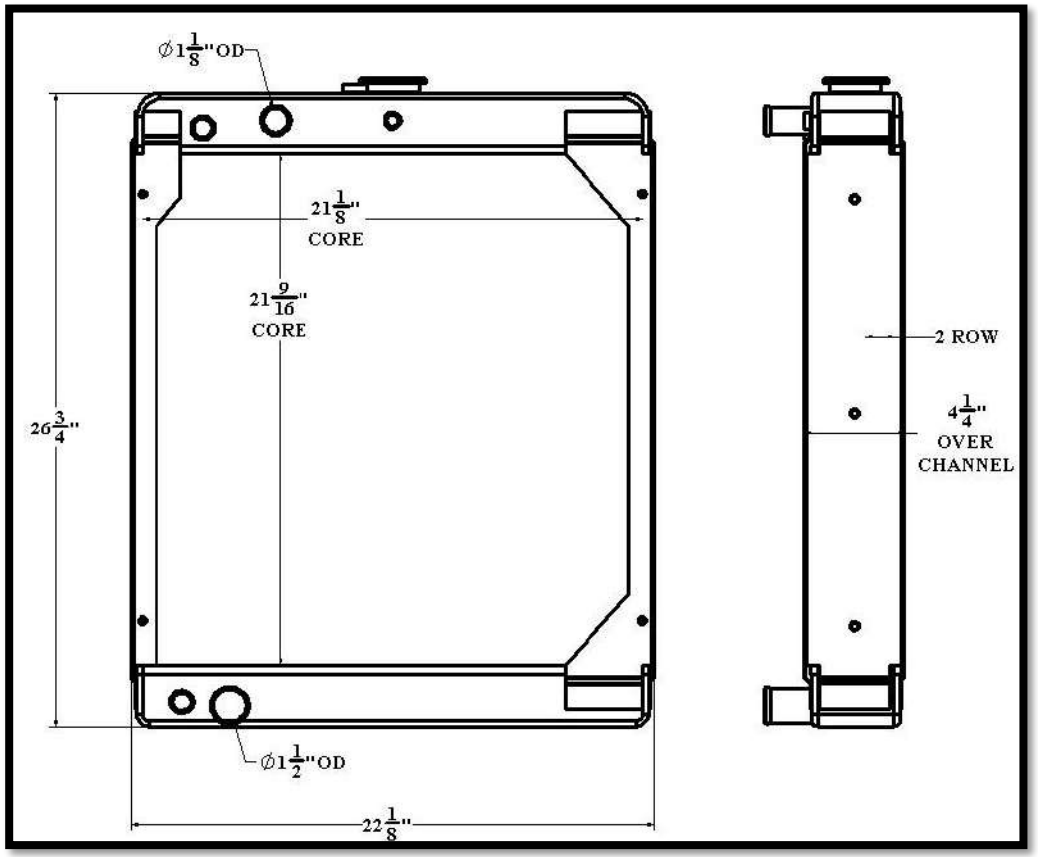

Overall Dimensions: 26-3/4” X 22-1/8” X 4-1/4”
Core: 21-9/16” X 21-1/8” X 2 ROW
Inlet: 1-1/8” OD
Outlet: 1-1/2” OD

Tel 1.800.774.2168
www.bgrradiator.com

BGR Part Number: ST-0272-4X-NC

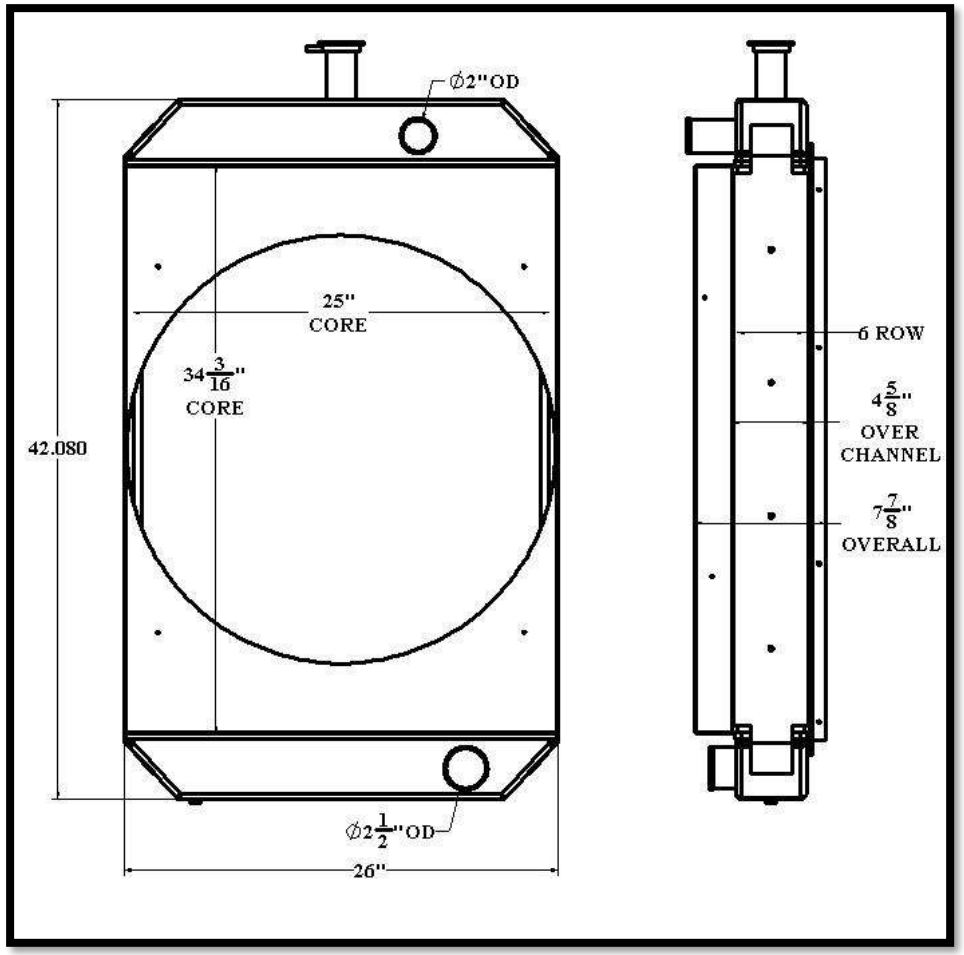

Overall Dimensions: 42.080” X 26” X 7-7/8”
Core: 34-3/16” X 25” X 6 ROW
Inlet: 2”
Outlet: 2-1/2”OD

ST271

Listed dimensions may vary slightly from OE

ST272

BGR Part Number: ST-0273-4X-NC

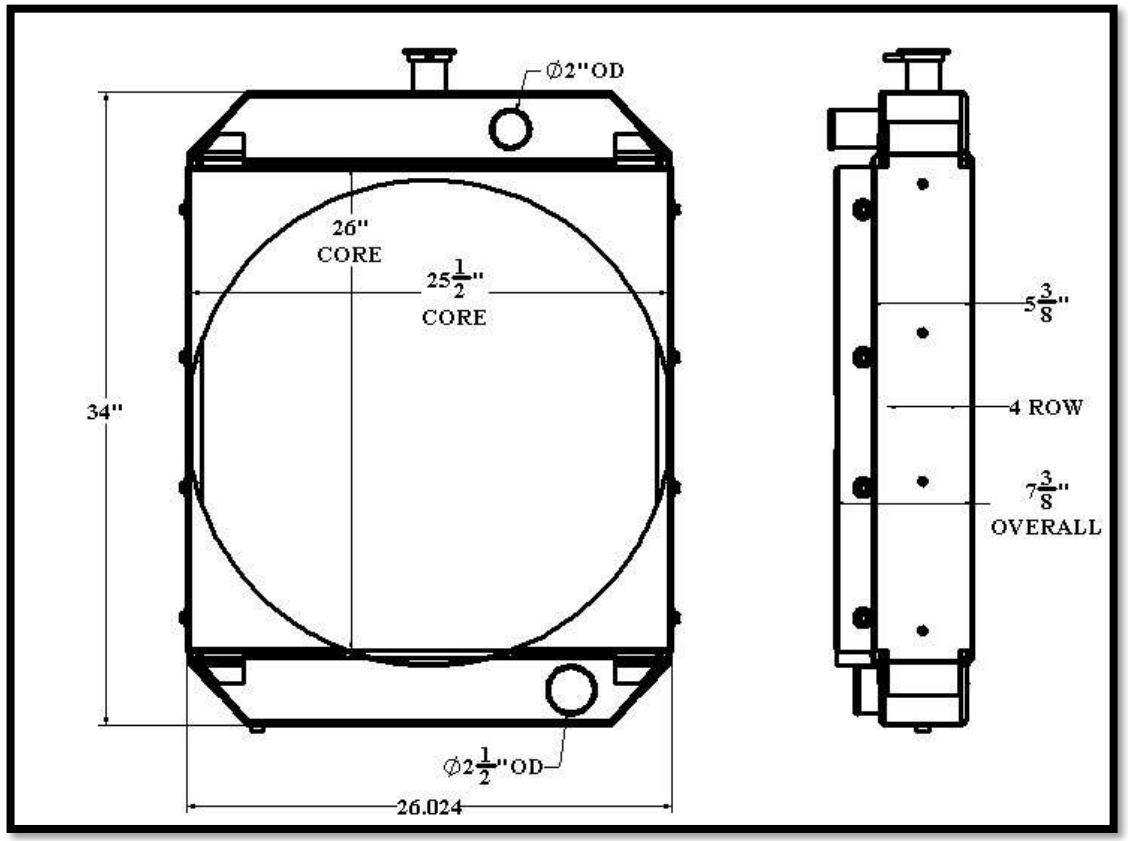

Overall Dimensions: 34” X 26.024” X 5-3/8”
Core: 26” X 25-1/2” X 4 ROW
Inlet: 2” OD
Outlet: 2-1/2” OD

Tel 1.800.774.2168
www.bgrradiator.com

BGR Part Number: ST-0274-6M-F
GROVE CRAIN MODEL IND-68 SN 22953

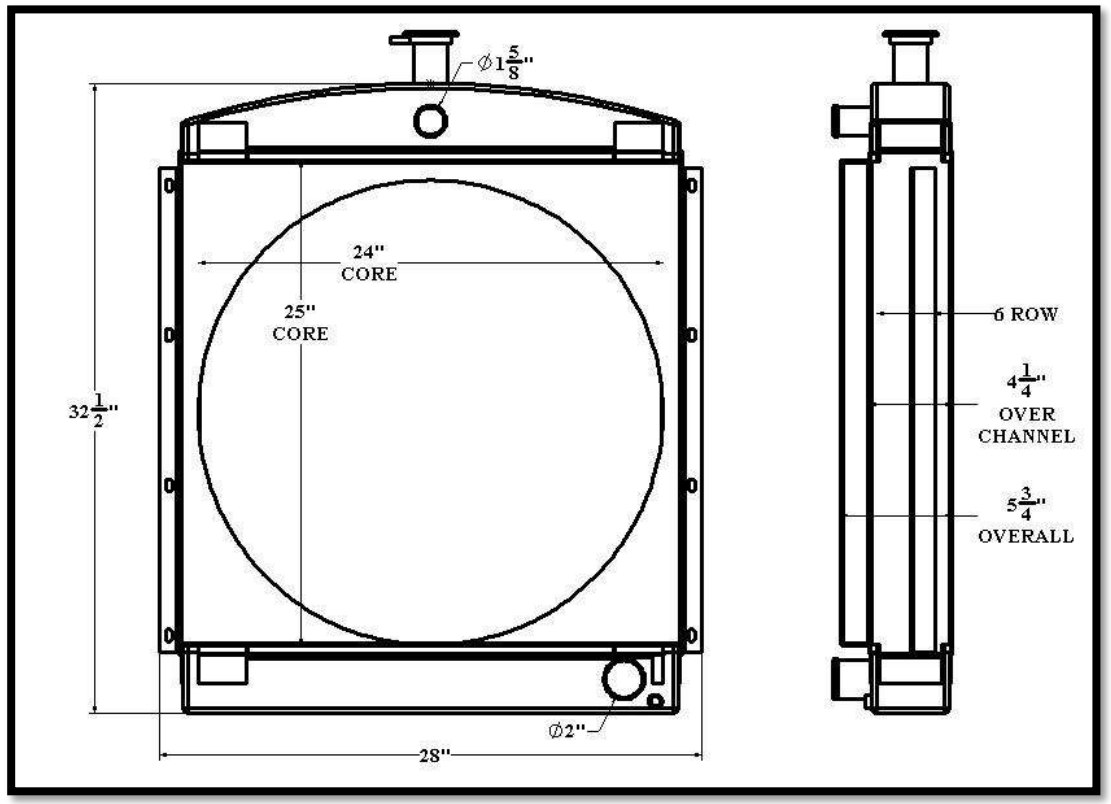

Overall Dimensions: 32.5” X 28” X 5-3/4”
Core: 25” X 24” X 6 ROW
Inlet: 1-5/8”
Outlet: 2”OD

Listed dimensions may vary slightly from OE

BGR Part Number: ST-0275-6I-NC
3304 CAT, 4L2114, 4L2115, 4L2116

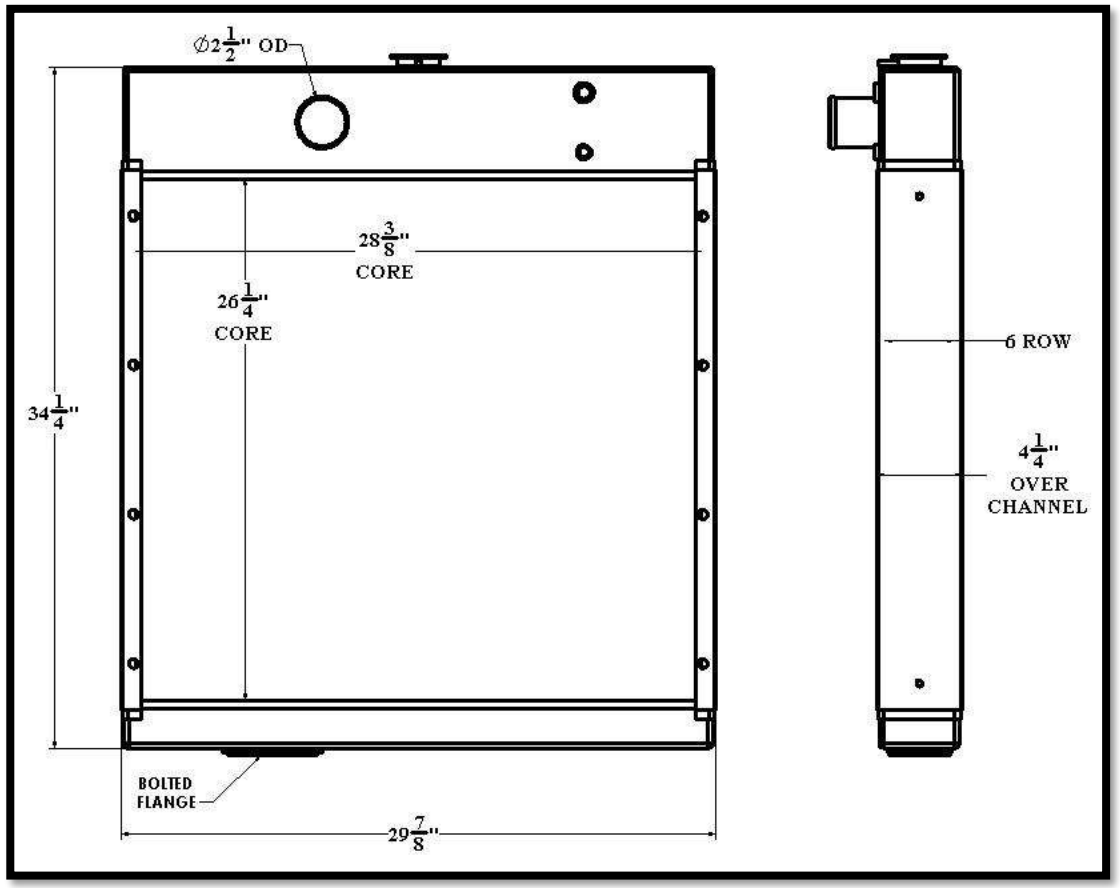

Overall Dimensions: 34-1/4” X 29-7/8” X 4-1/4”
Core: 26-1/4” X 28-3/8” X 6 ROW
Inlet: 2-1/2” OD
Outlet: BOLTED FLANGE

Tel 1.800.774.2168
www.bgrradiator.com

BGR Part Number: ST-0276-5M-F
KATOLIGHT 100KW, PN SUA37807

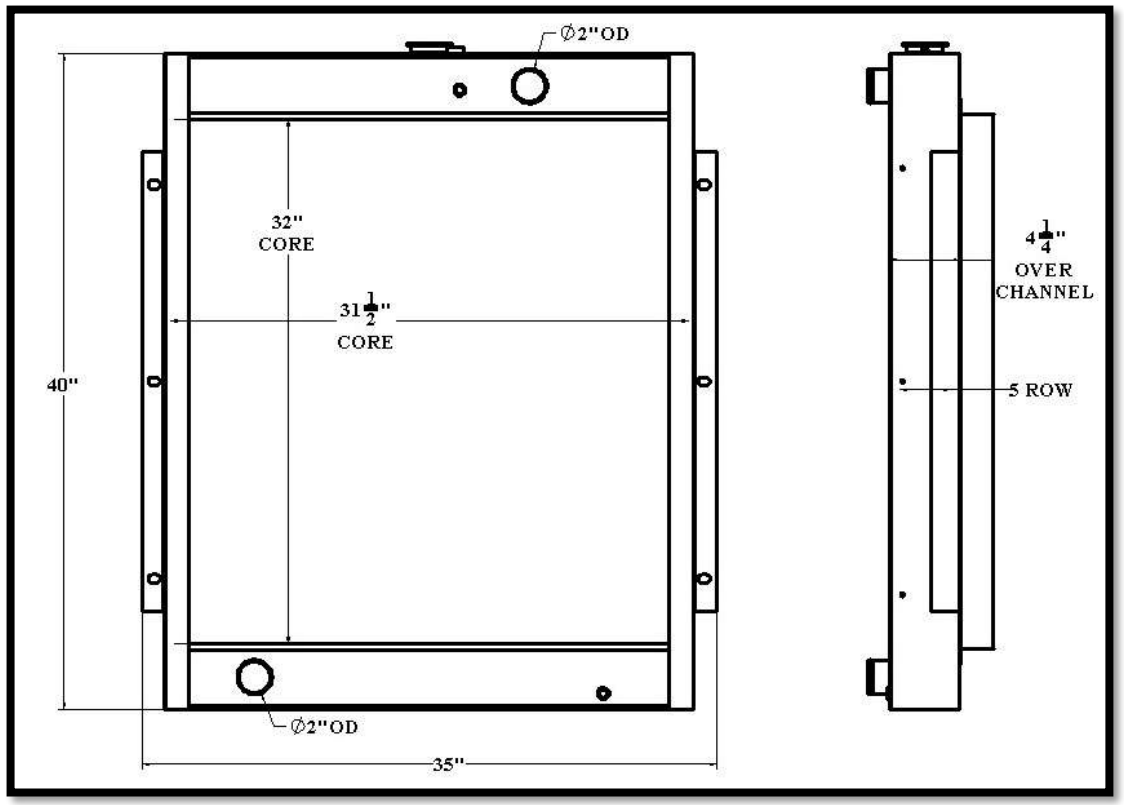

Overall Dimensions: 40” X 35” X 4-1/4”
Core: 32” X 31-1/4” X 5 ROW
Inlet: 2” OD
Outlet: 2” OD

Listed dimensions may vary slightly from OE

BGR Part Number: ST-0277-6I-NC

RADIATOR SPECIALTIES GM 31838 REV A 27799-01-002

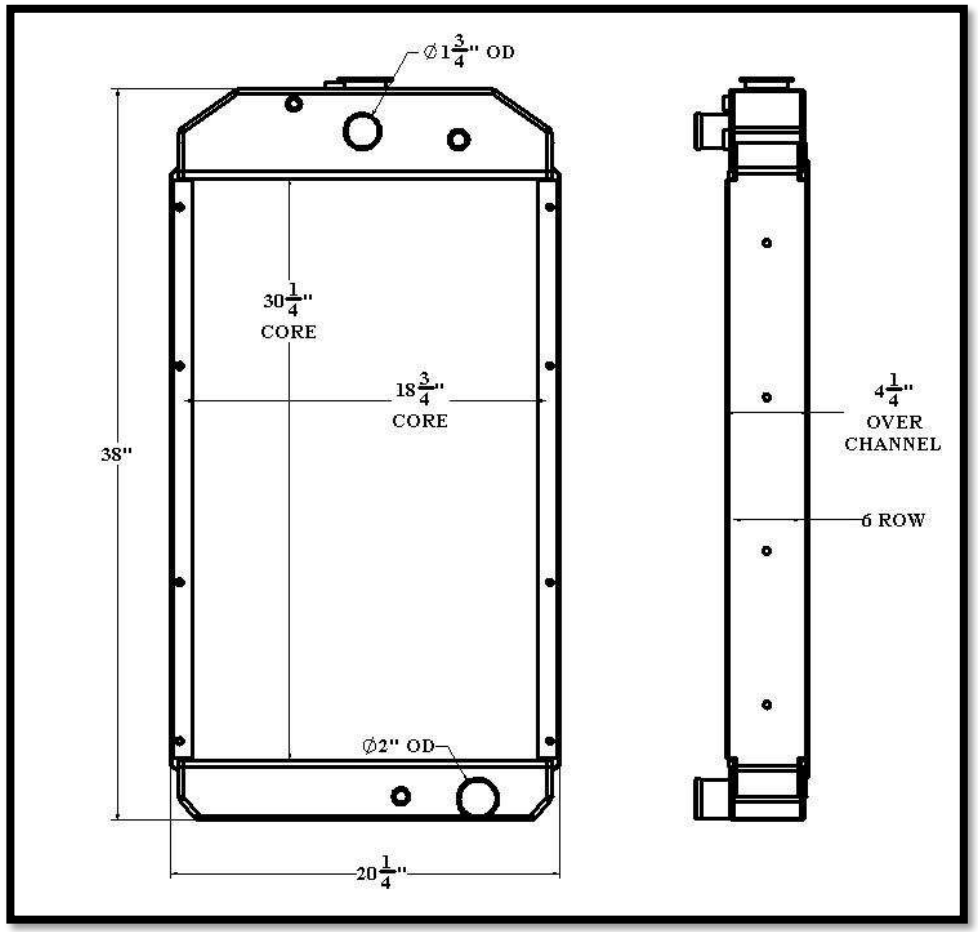

Overall Dimensions:38” X 20-1/4”” X 4-1/4”

Core: 26-1/4” X 18-3/4” X 6 ROW

Inlet: 1-3/4” OD

Outlet: 2” OD

Tel 1.800.774.2168

www.bgrradiator.com

BGR Part Number: ST-0278-5J-NC

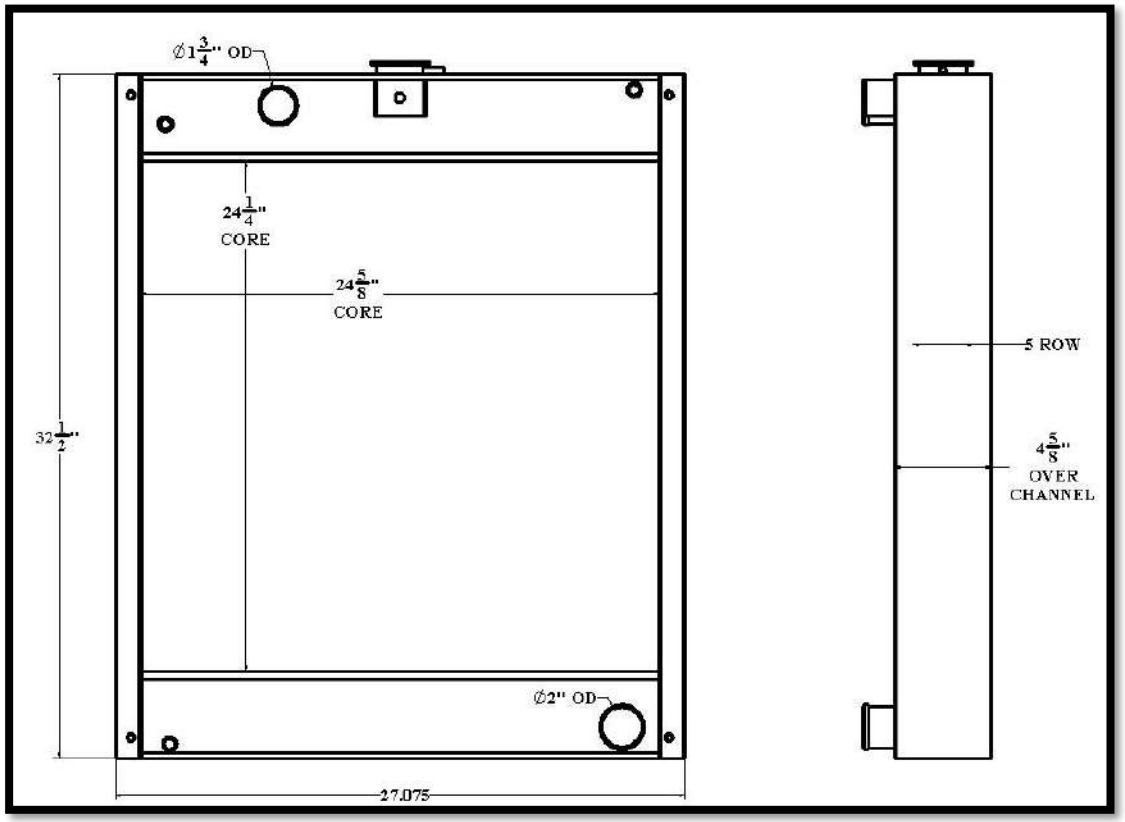

Overall Dimensions: 32-1/2” X 27.075” X 4-5/8”

Core: 24-1/4” X 24-5/8” X 5 ROW

Inlet: 1-3/4” OD

Outlet: 2” OD

ST277

Listed dimensions may vary slightly from OE

ST278

BGR Part Number: ST-0279-4T-NC
GENERAC, 0A6164, 24289129

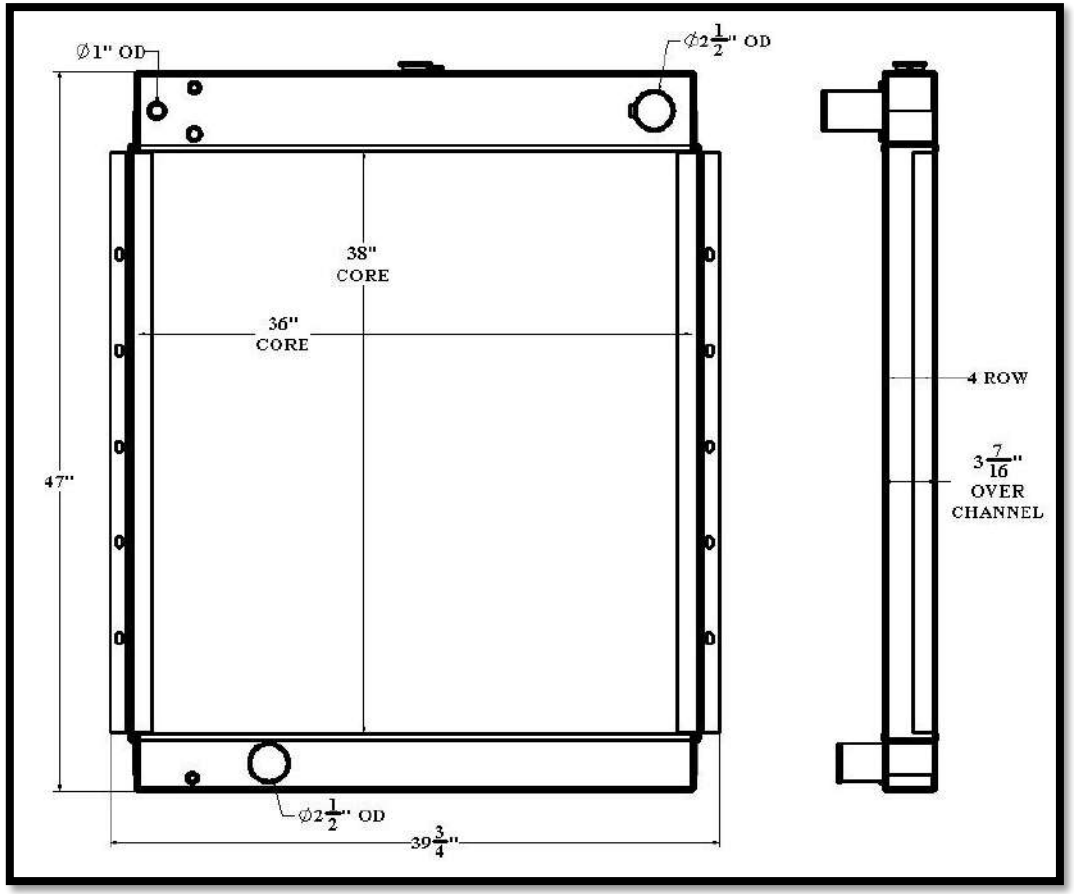

Overall Dimensions:47” X 39-3/4” X 3-7/16”
Core: 38” X 36” X 4 ROW
Inlet: 2-1/2” OD
Outlet: 2-1/2” OD

Tel 1.800.774.2168
www.bgrradiator.com

BGR Part Number: ST-0280-3T-NC
KOHLER 10 KW

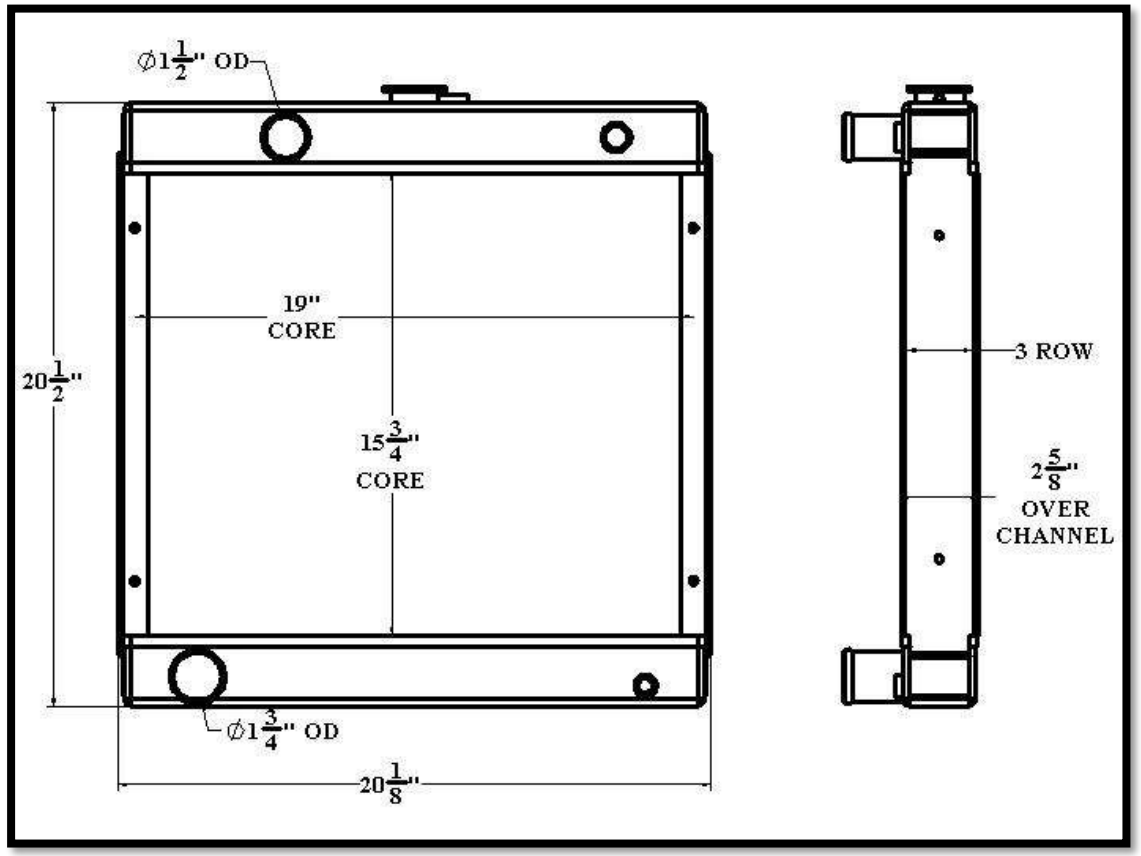

Overall Dimensions: 20-1/2” X 20-1/8” X 2-5/8”
Core: 15-3/4” X 19” X 3 ROW
Inlet: 1-1/2” OD
Outlet: 1-3/4” OD

ST279

Listed dimensions may vary slightly from OE

ST280

BGR Part Number: ST-0281-5Z
SCANIA 320 SR CRUSHER, MN422134-6490

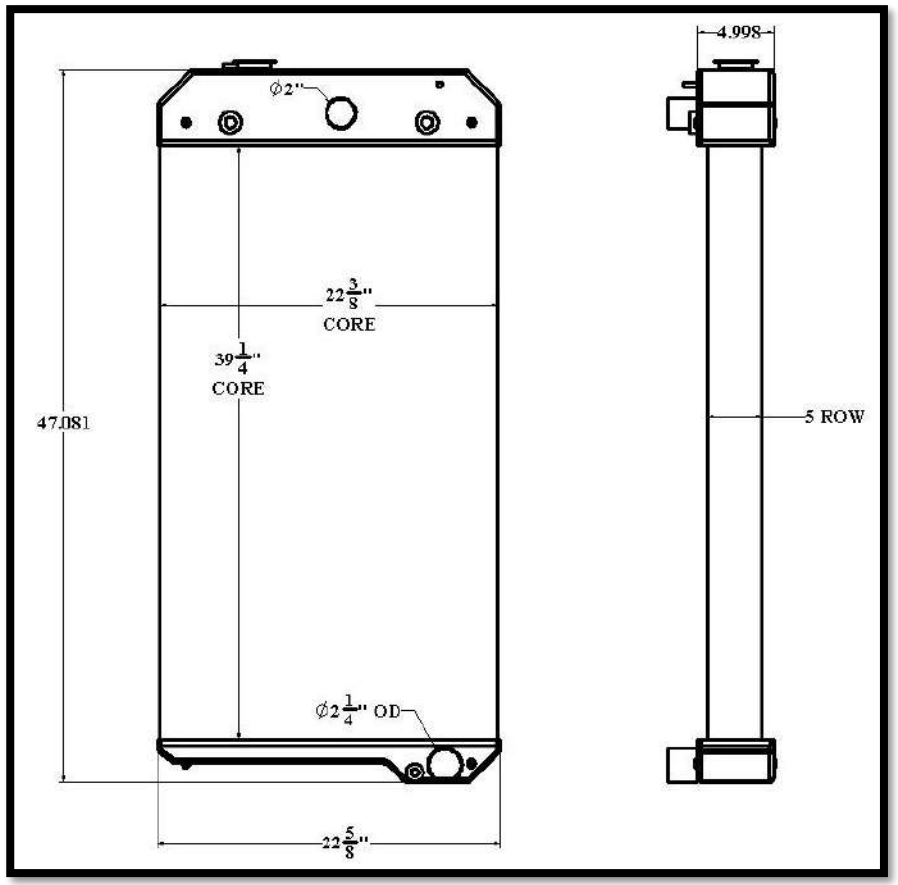

Overall Dimensions: 47.081” X 22-5/8” X 4.998”
Core: 39-1/4” X 22-3/8” X 5 ROW
Inlet: 2” OD
Outlet: 2-1/4” OD

Tel 1.800.774.2168
www.bgrradiator.com

BGR Part Number: ST-0282-4I-NC
RADIATOR SPECIALTIES RS-4932, ONAN 186-6708

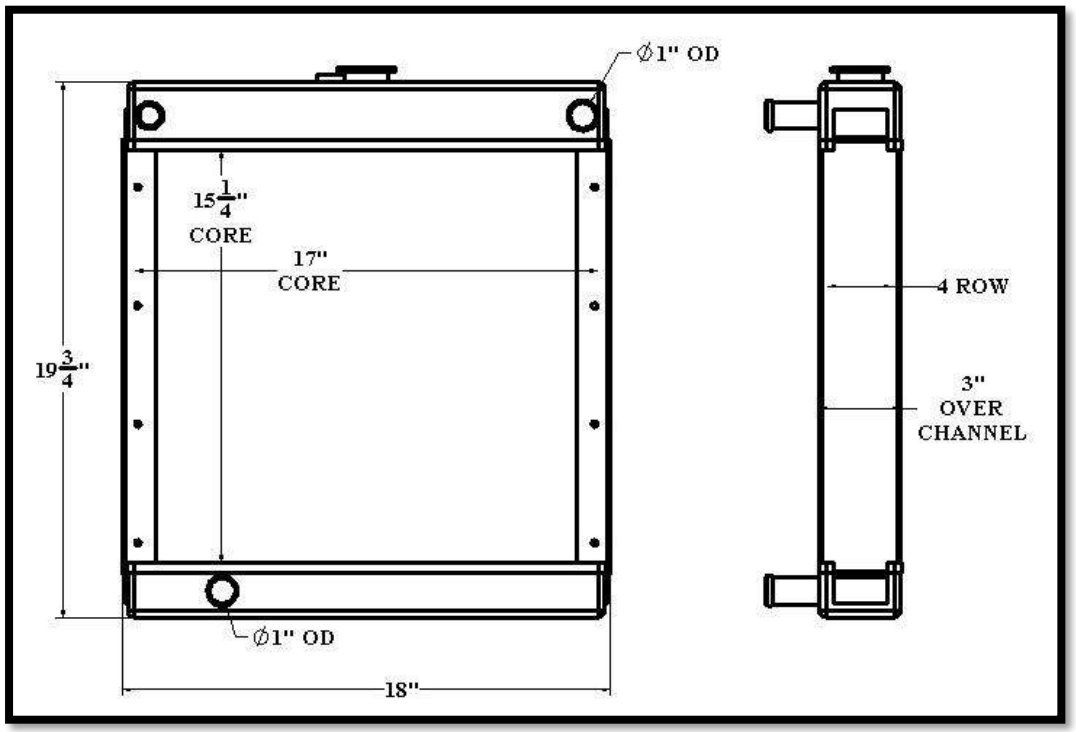

Overall Dimensions: 19-3/4” X 18” X 3”
Core: 15-1/4” X 17” X 4 ROW
Inlet: 1” OD
Outlet: 1” OD

ST281

Listed dimensions may vary slightly from OE

ST282

BGR Part Number: ST-0283-2VT-NC
A-326402

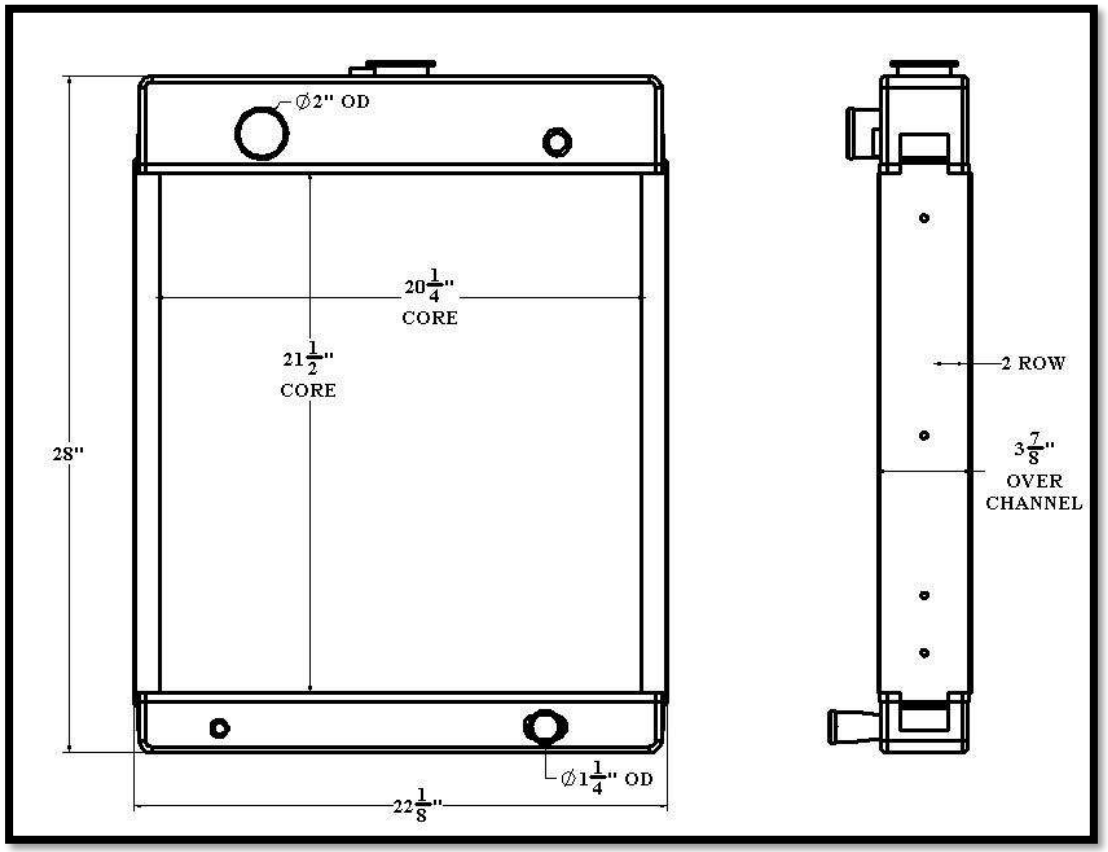

Overall Dimensions: 28” X 22-1/8” X 3-7/8”
Core: 21-1/2” X 24-1/4” X 2 ROW
Inlet: 2” OD
Outlet: 1-1/4” OD

Tel 1.800.774.2168
www.bgrradiator.com

BGR Part Number: ST-0284-4T-B
7C7961, 1A14280

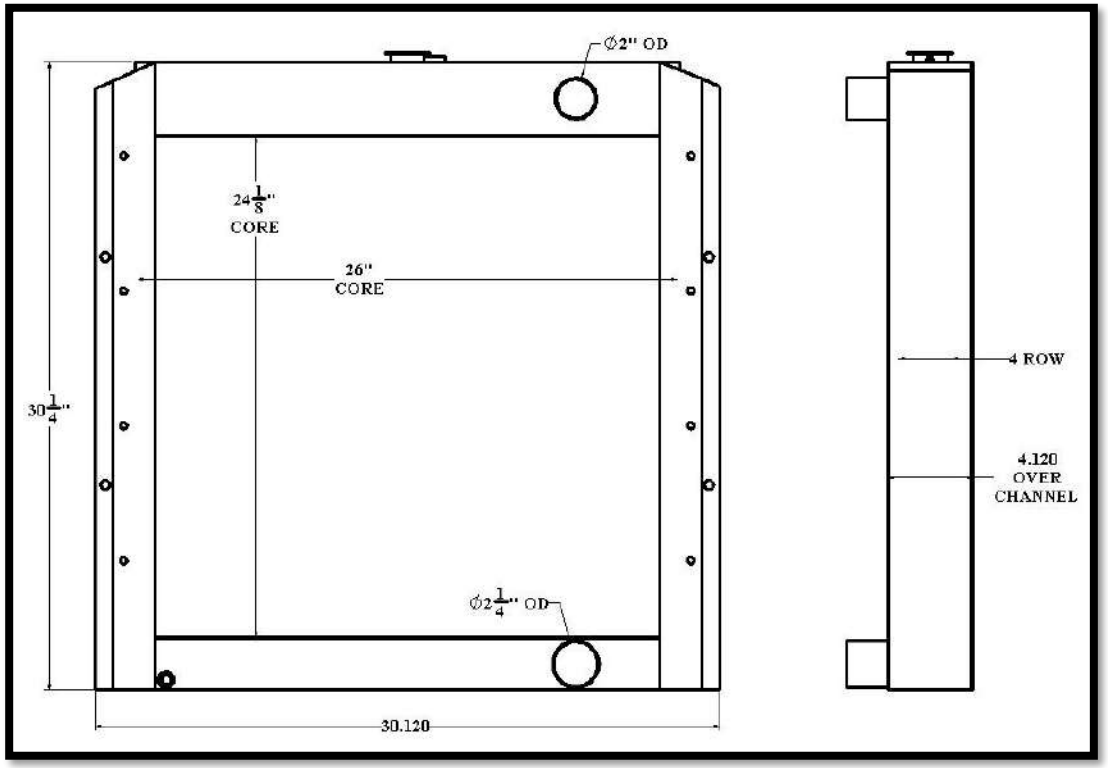

Overall Dimensions: 30-1/4” X 30.120” X 4.120”
Core: 24-1/8” X 26” X 4 ROW
Inlet: 2” OD
Outlet: 2-1/4” OD

ST283

Listed dimensions may vary slightly from OE

ST284

BGR Part Number: ST-0285-3M-NC
A-276470

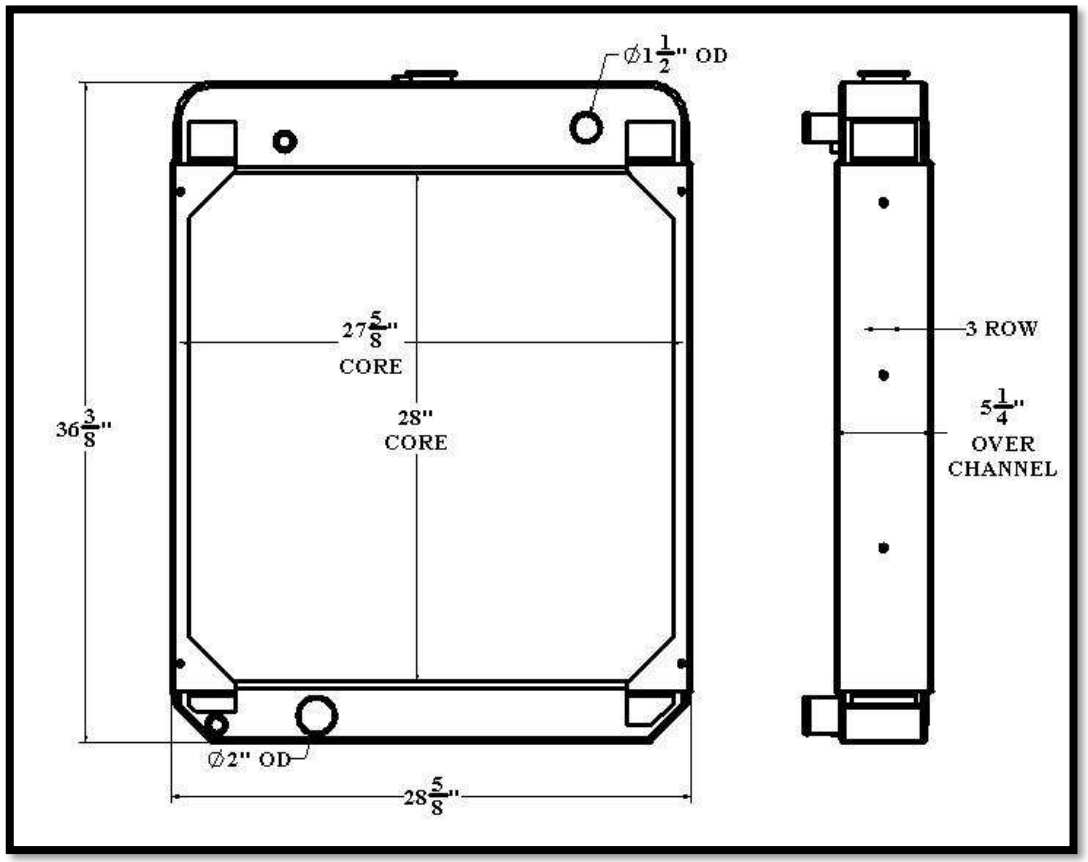

Overall Dimensions: 36-3/8” X 28-5/8” X 5-1/4”
Core: 28” X 27-5/8” X 5 ROW
Inlet: 1-1/2” OD
Outlet: 2” OD

Tel 1.800.774.2168
www.bgrradiator.com

BGR Part Number: ST-0286-4M-F

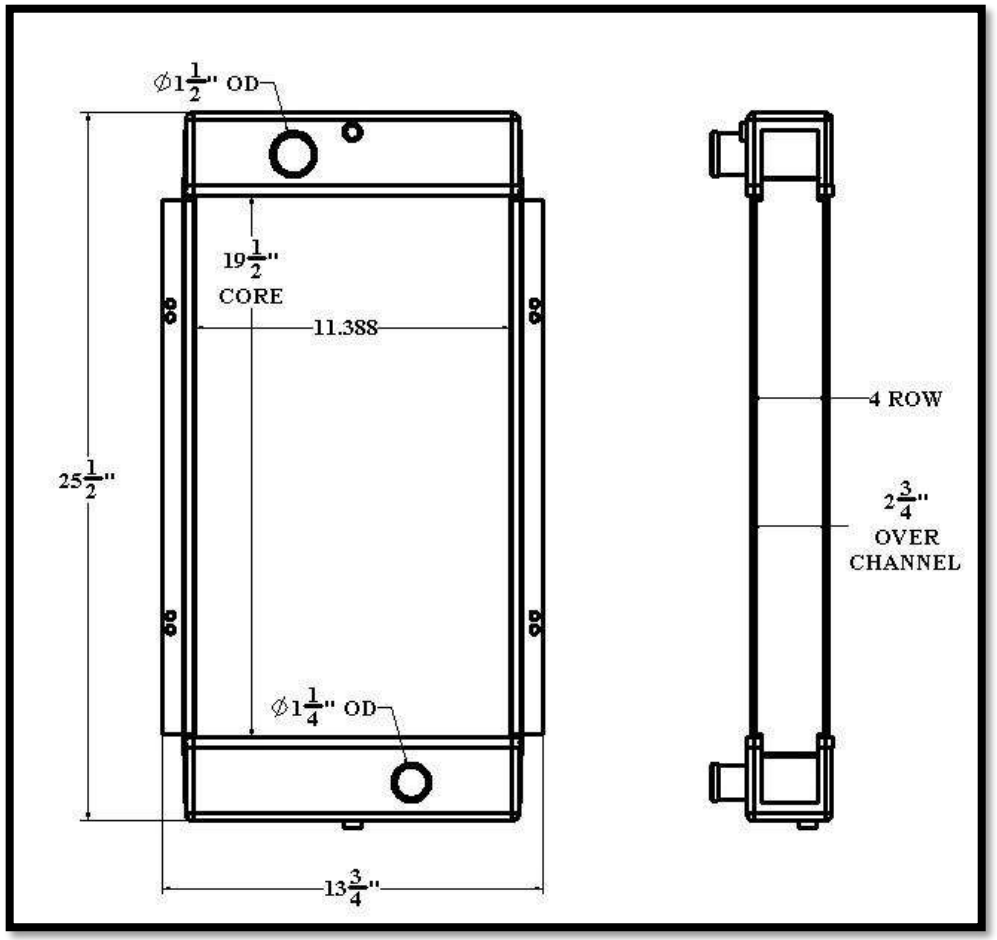

Overall Dimensions: 25-1/2” X 13-3/4” X 2-3/4”
Core: 19-1/2” X 11.388” X 4 ROW
Inlet: 1-1/2” OD
Outlet: 1-1/4” OD

ST285

Listed dimensions may vary slightly from OE

ST286

BGR Part Number: ST-0287-4VTU-F
GENERAC OD6386

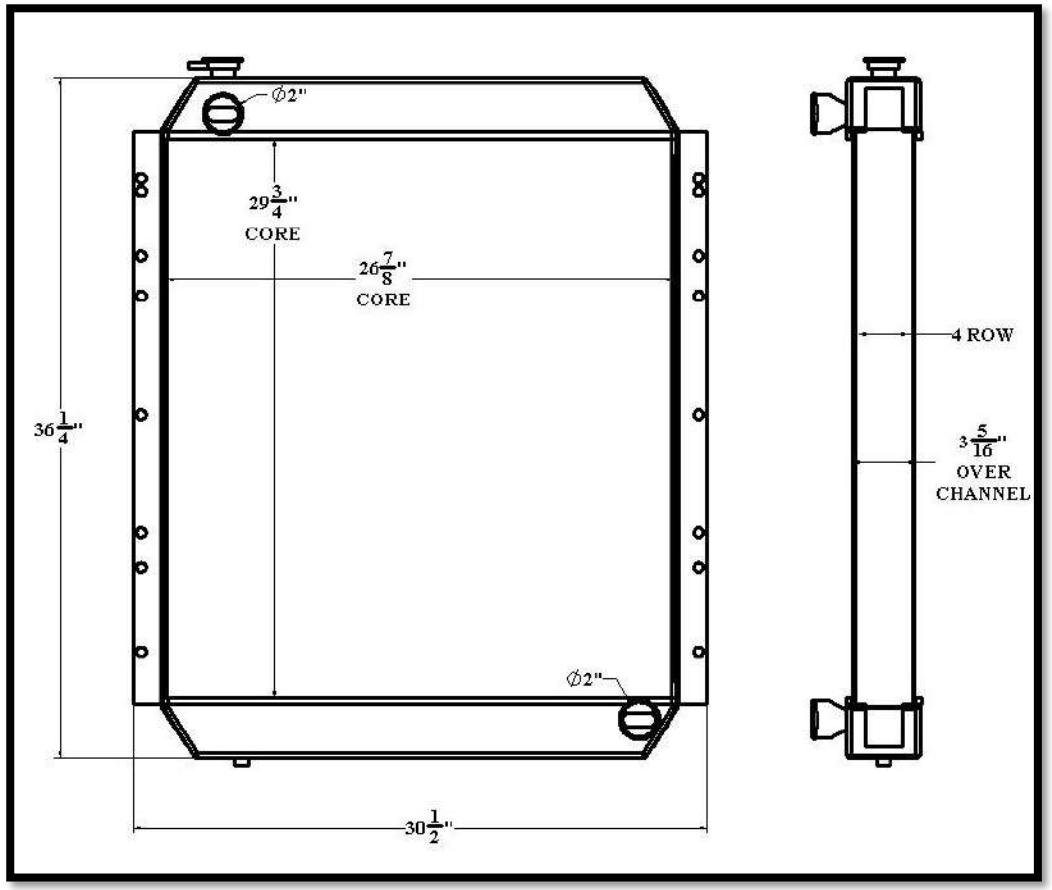

Overall Dimensions: 36-3/8” X 28-5/8” X 5-1/4”
Core: 28” X 27-5/8” X 5 ROW
Inlet: 1-1/2” OD
Outlet: 2” OD

Tel 1.800.774.2168
www.bgrradiator.com

BGR Part Number: ST-0288-4VT-NC
T RAD PROD# C771-002-0001-7

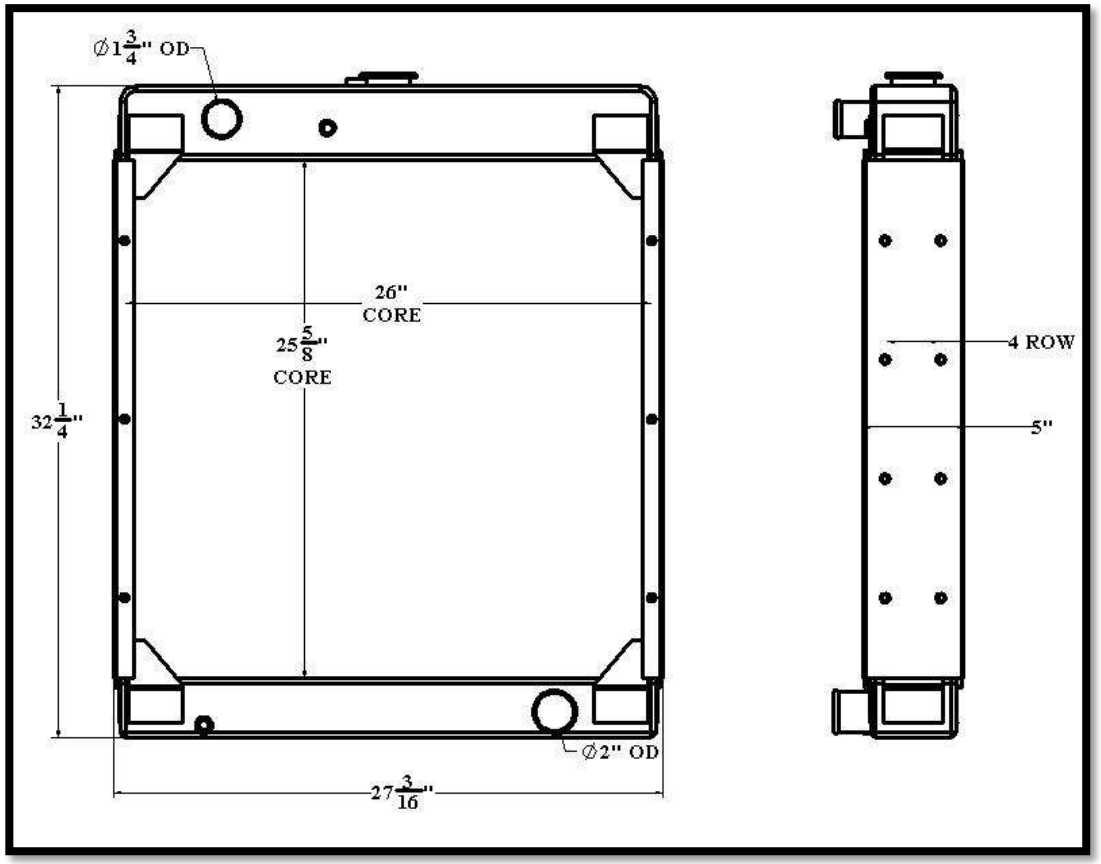

Overall Dimensions: 32-1/4” X 27-3/16” X 5”
Core: 25-5/8” X 26” X 4 ROW
Inlet: 1-3/4” OD
Outlet: 2” OD

ST287

Listed dimensions may vary slightly from OE

ST288

BGR Part Number: ST-0289-8I-F
RADIATOR SPECIALTIES RS-5893

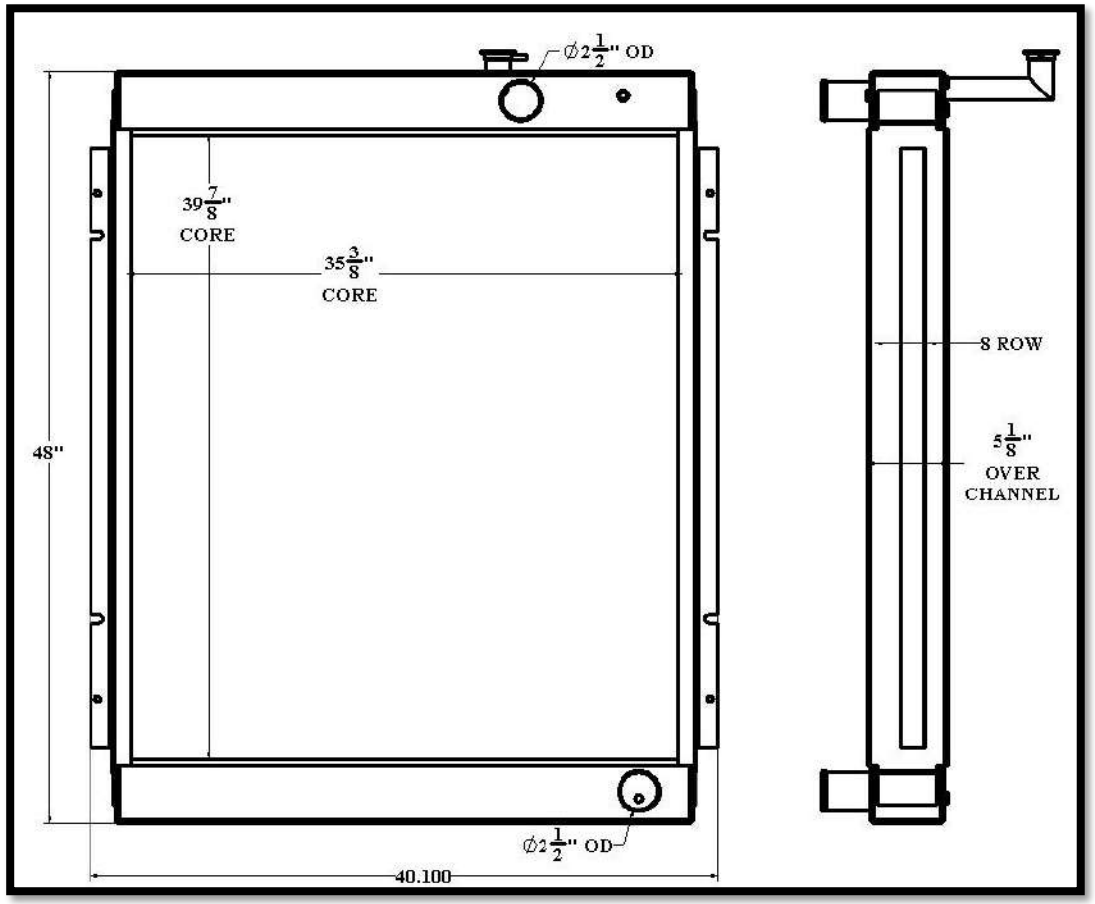

Overall Dimensions: 36-3/8” X 28-5/8” X 5-1/4”
Core: 28” X 27-5/8” X 5 ROW
Inlet: 1-1/2” OD
Outlet: 2” OD

Tel 1.800.774.2168
www.bgrradiator.com

BGR Part Number: ST-0290-6I-NC
MODINE 12020, 030486, 031184

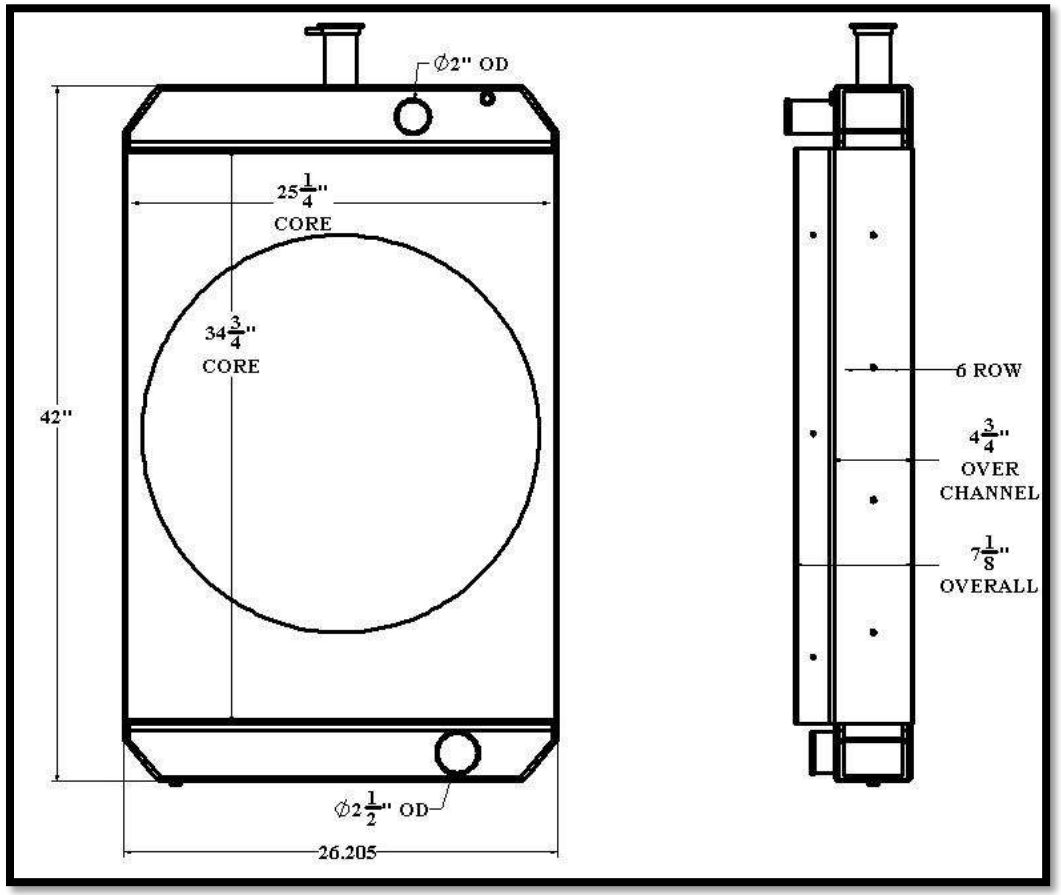

Overall Dimensions: 42” X 26.205” X 7-1/8”
Core:34-3/4” X 25-1/4” X 6 ROW
Inlet: 2” OD
Outlet: 2-1/2” OD

ST289

Listed dimensions may vary slightly from OE

ST290

BGR Part Number: ST-0291-6I-F
MODINE 1A9899, 0308094, AR80174, 031095

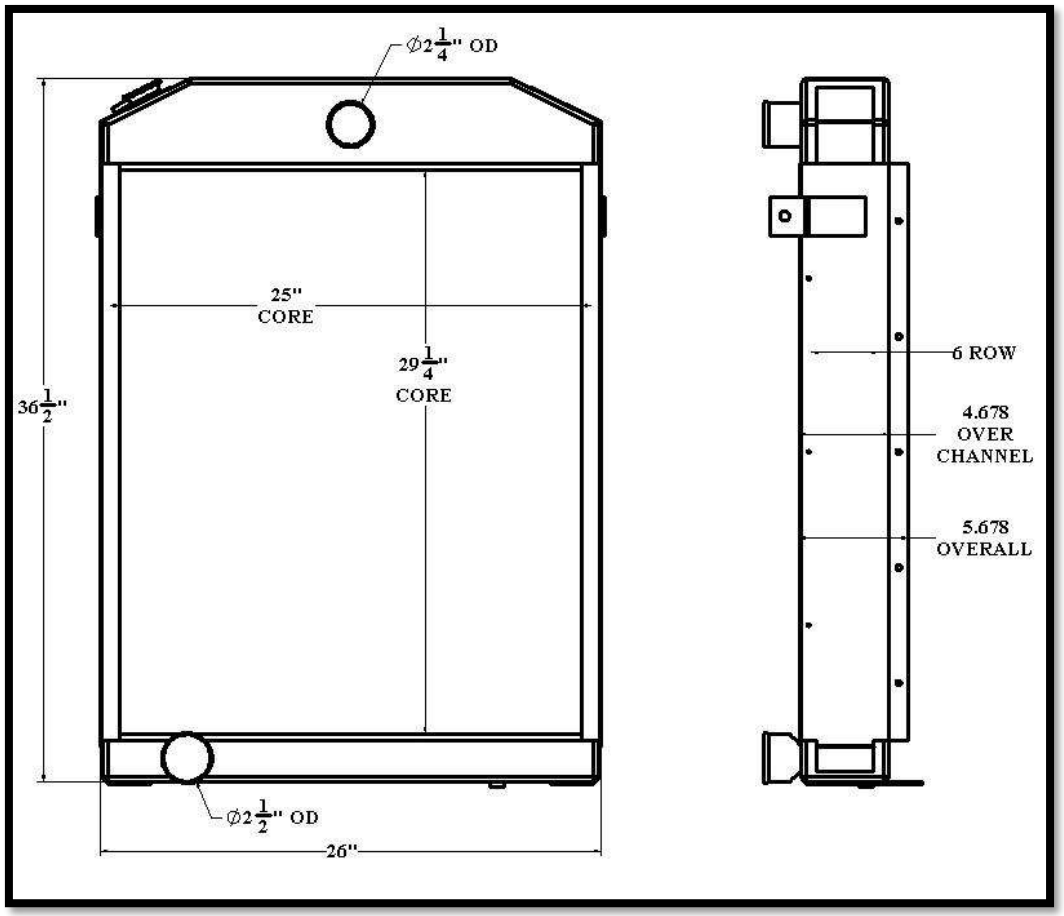

Overall Dimensions: 36-1/2” X 26” X 5.678”
Core: 29-1/4” X 25” X 6 ROW
Inlet: 2-1/4” OD
Outlet: 2-1/2” OD

Tel 1.800.774.2168
www.bgrradiator.com

BGR Part Number: ST-0292-4I-F
0E1411A

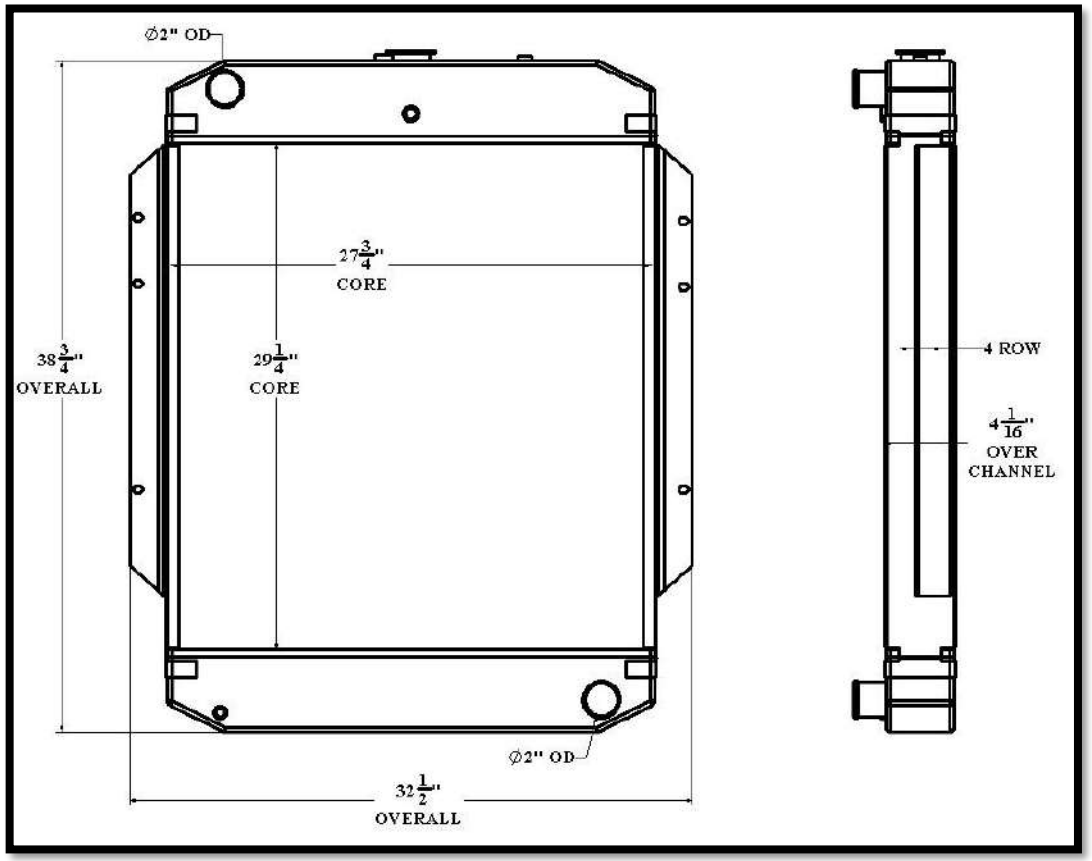

Overall Dimensions: 38-3/4” X 32-1/2” X 4-1/16”
Core: 29-1/4” X 27-3/4” X 4 ROW
Inlet: 2”
Outlet: 2”

Listed dimensions may vary slightly from OE

BGR Part Number: ST-0293-4R-F
PERFEX R9017D

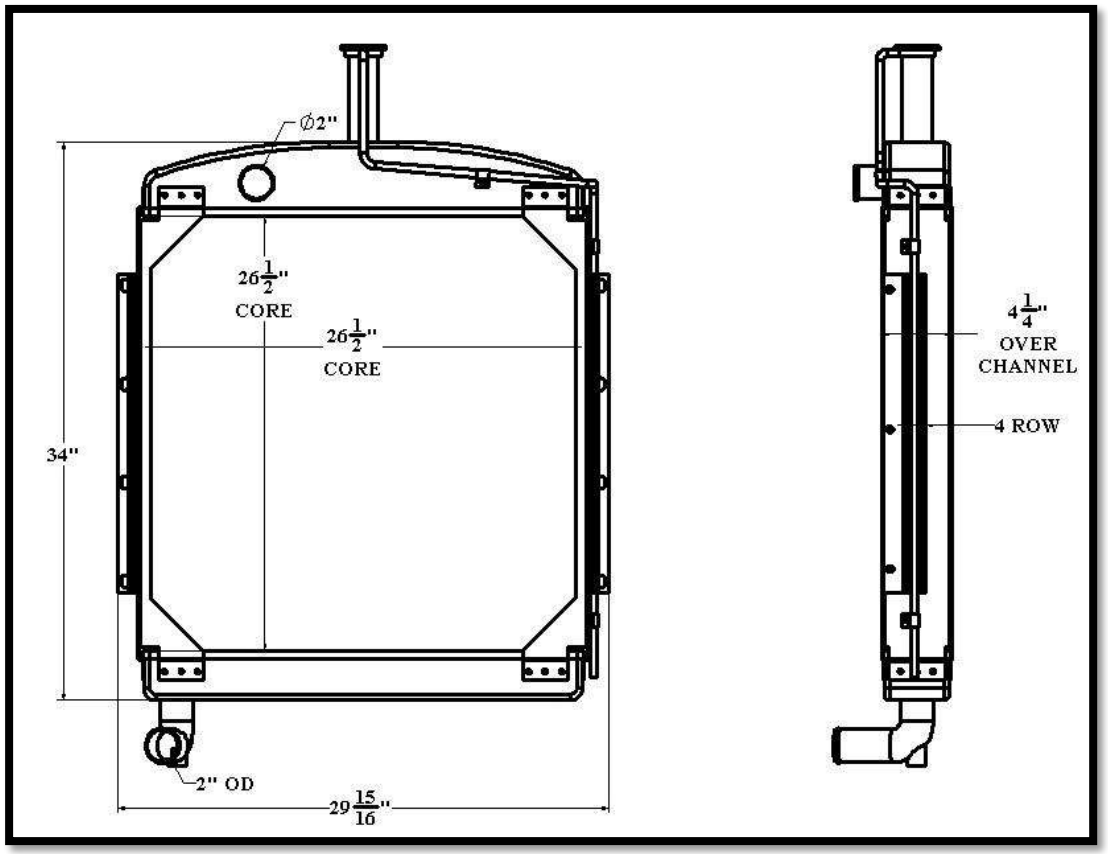

Overall Dimensions: 34” X 29-15/16” X 4-1/4”
Core: 26-1/2” X 26-/2” X 4 ROW
Inlet: 2” OD
Outlet: 2” OD

Tel 1.800.774.2168
www.bgrradiator.com

BGR Part Number: ST-0294-2VTU-F

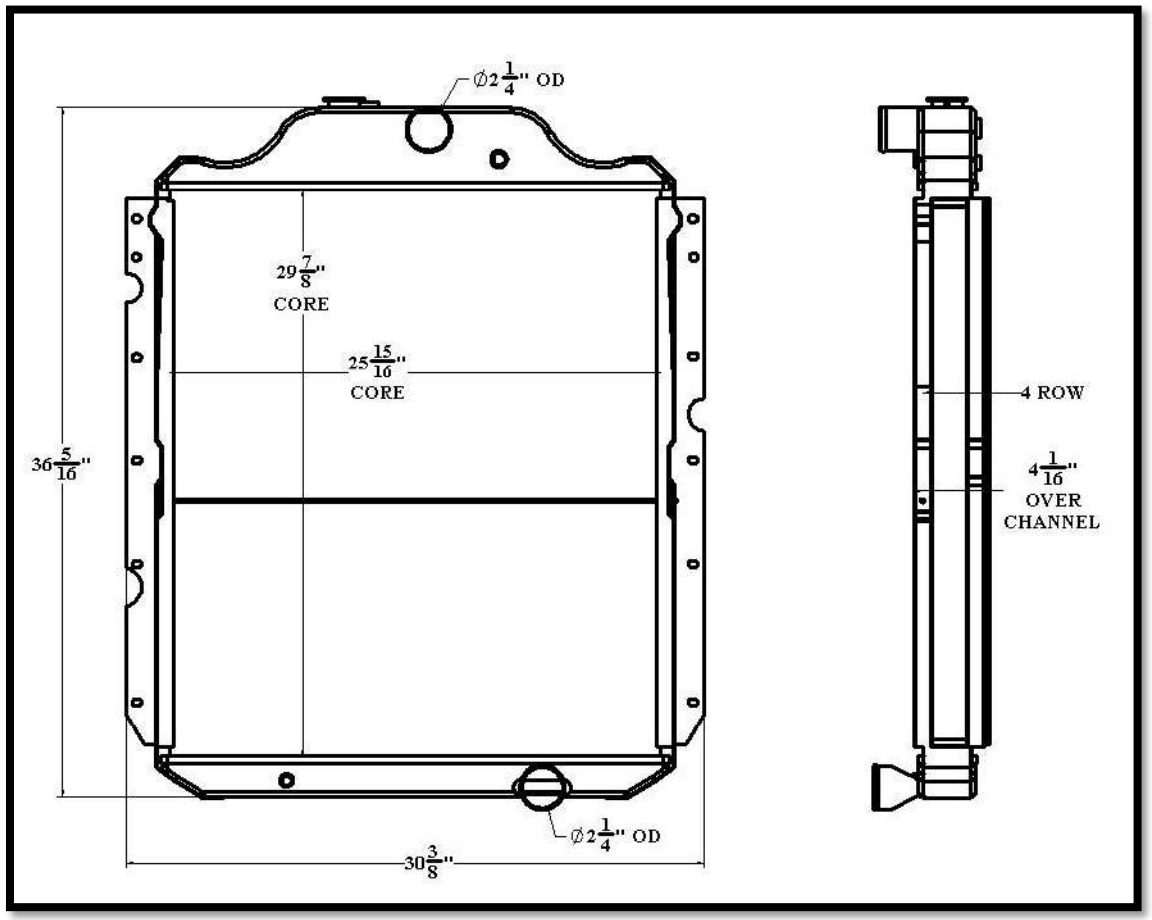

Overall Dimensions: 36-5/16” X 30-3/8” X 4-1/16”
Core: 29-7/8” X 25-15/16” X 4 ROW
Inlet: 2-1/4” OD
Outlet: 2-1/4” OD

ST293

Listed dimensions may vary slightly from OE

ST294

BGR Part Number: ST-0295-7M-NC

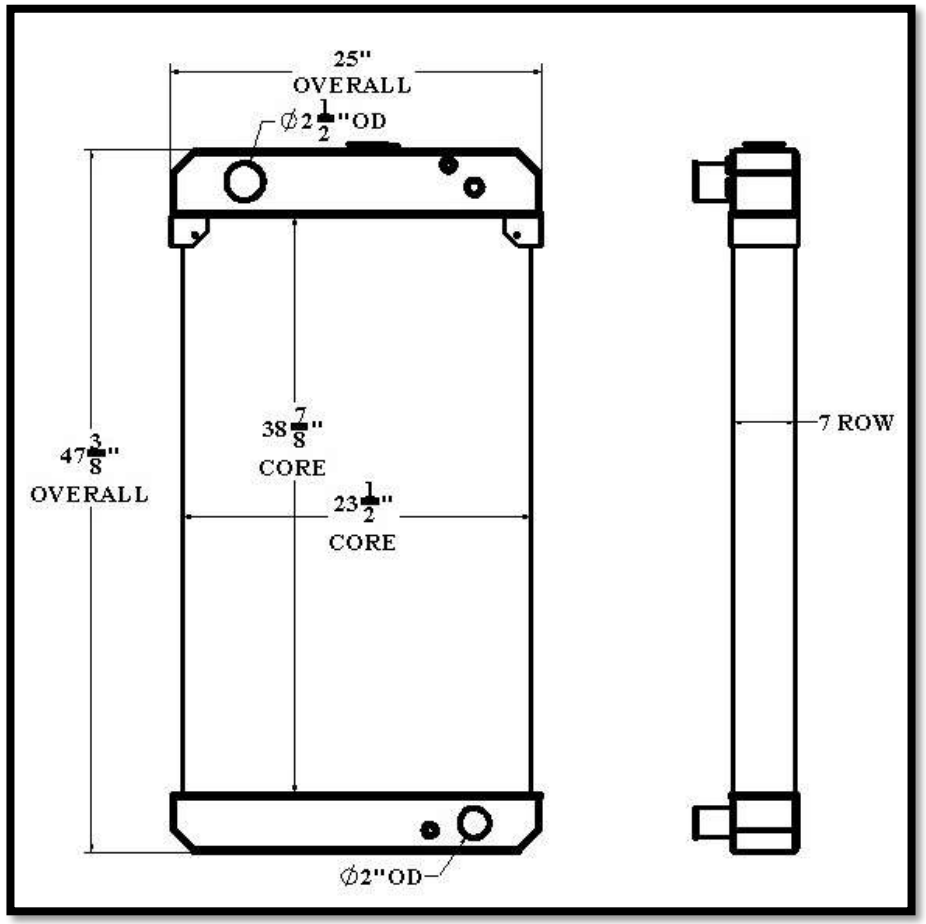

Overall Dimensions: 47-3/8” X 25”
Core: 38-7/8” X 23-1/2” X 7 ROW
Inlet: 2-1/2” OD
Outlet: 2” OD

Tel 1.800.774.2168
www.bgrradiator.com

BGR Part Number: ST-0296-4I-NC

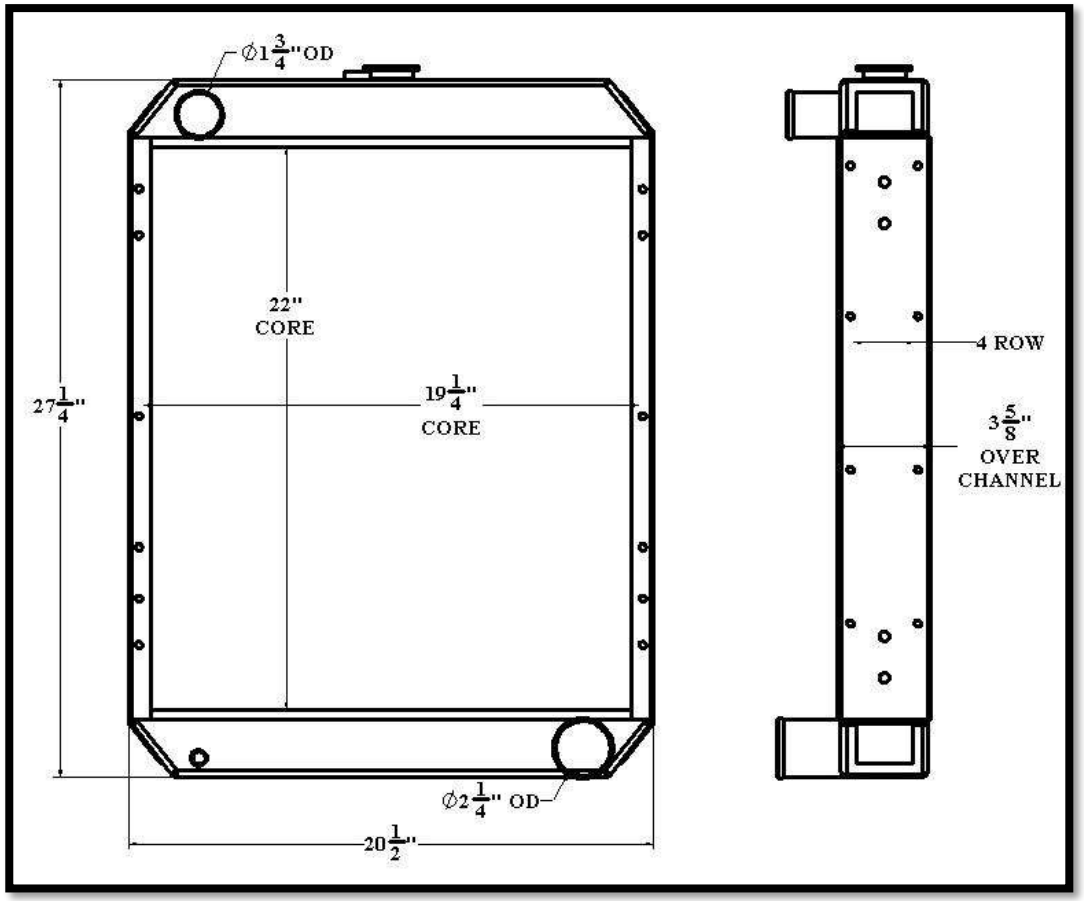

Overall Dimensions: 27-1/4” X 20-1/2” X 3-5/8”
Core: 22” X 19-1/4” X 4 ROW
Inlet: 1-3/4” OD
Outlet: 2-1/4” OD

ST295

Listed dimensions may vary slightly from OE

ST296

BGR Part Number: ST-0297-6I-F
12232P, 40-3902003

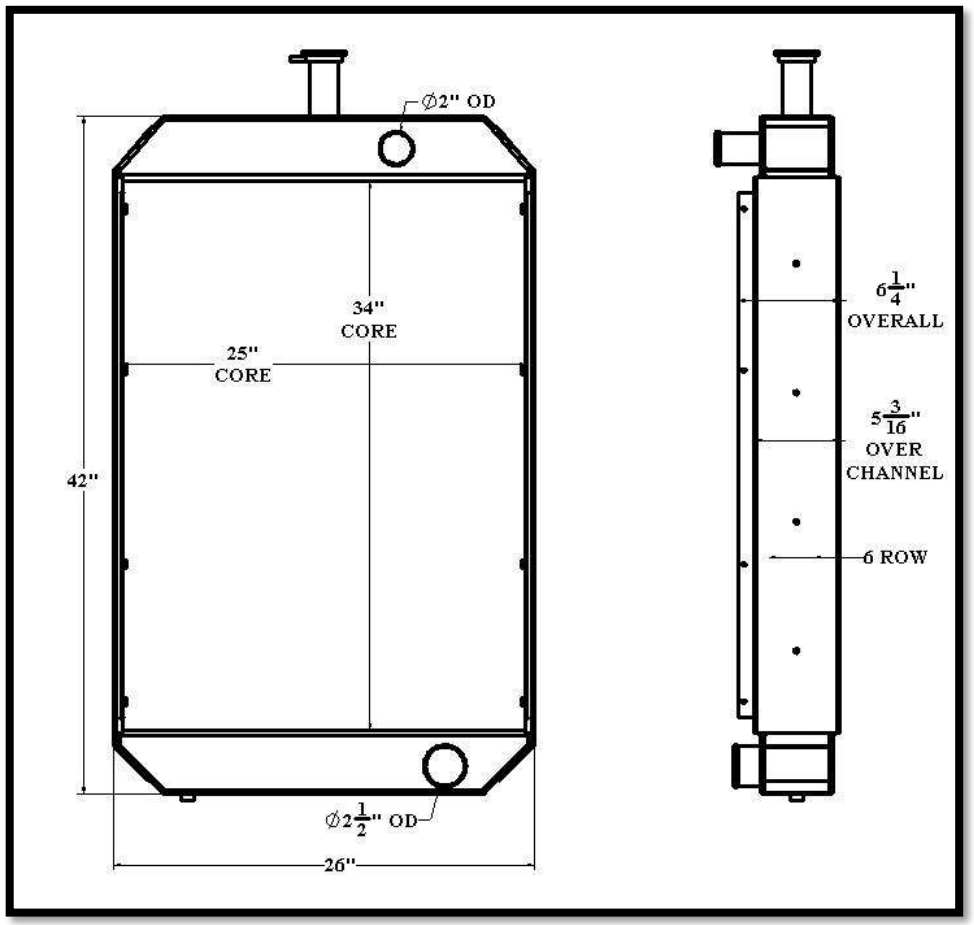

Overall Dimensions: 42” X 26” X 6-1/4”
Core: 34” X 25” X 6 ROW
Inlet: 2” OD
Outlet: 2-1/2” OD

Tel 1.800.774.2168
www.bgrradiator.com

BGR Part Number: ST-0298-3VTU-B
0179-4582

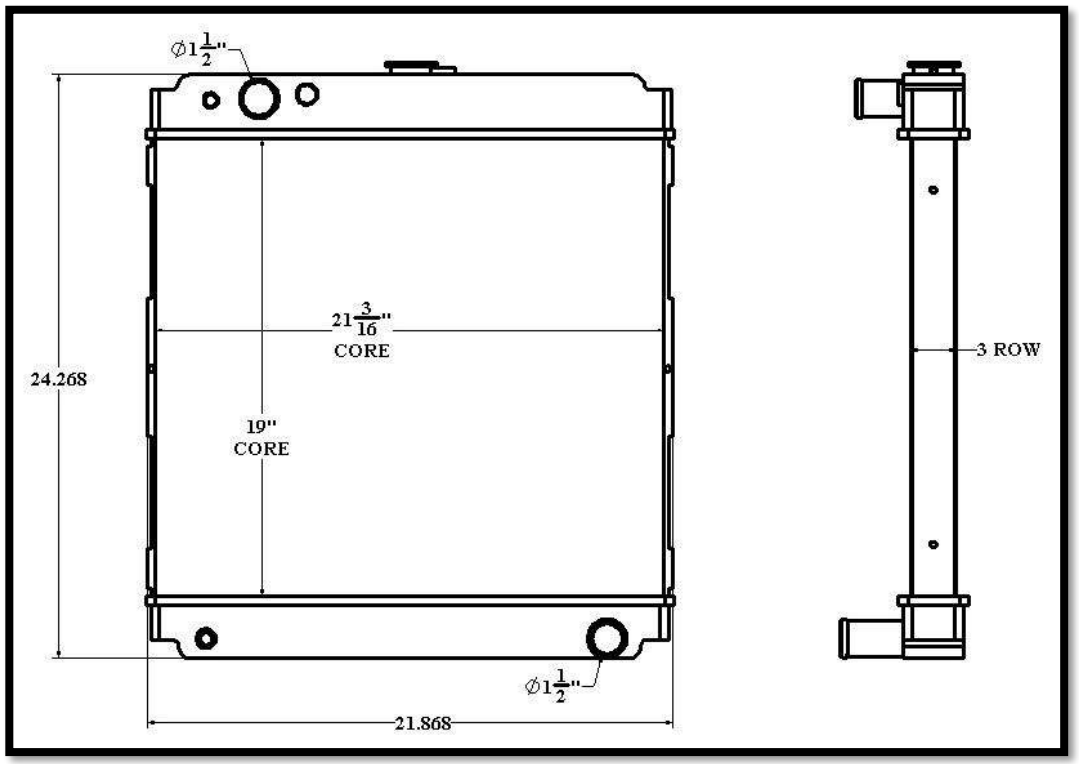

Overall Dimensions: 24.268” X 21.868” X 1 7/8”
Core: 21 3/16” X 19” X 3 ROW
Inlet: 1-1/2” OD
Outlet: 1-1/2” OD

ST297

Listed dimensions may vary slightly from OE

ST298

BGR Part Number: ST-0299-5I-B

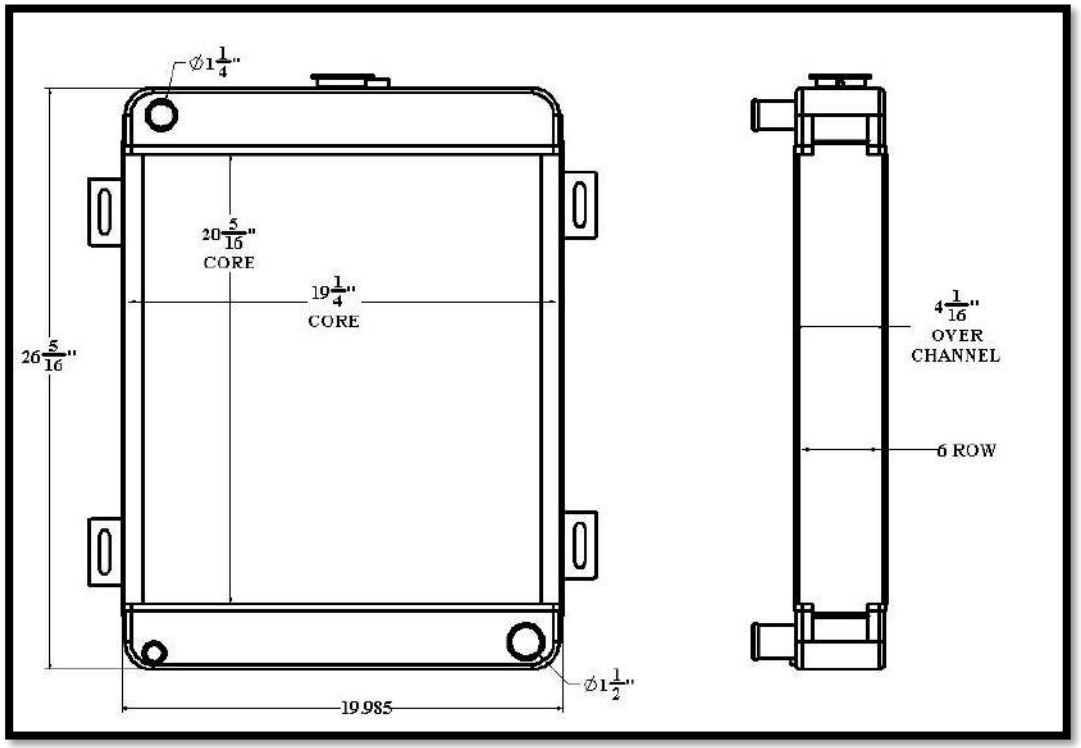

Overall Dimensions: 26-5/16” X 19.985” X 4-1/16”
Core: 20-5/16” X 19-1/4” X 6 ROW
Inlet: 1-1/4” OD
Outlet: 1-1/2” OD

Tel 1.800.774.2168
www.bgrradiator.com

BGR Part Number: ST-0300-5I-B
MITSUBISHI ME037860

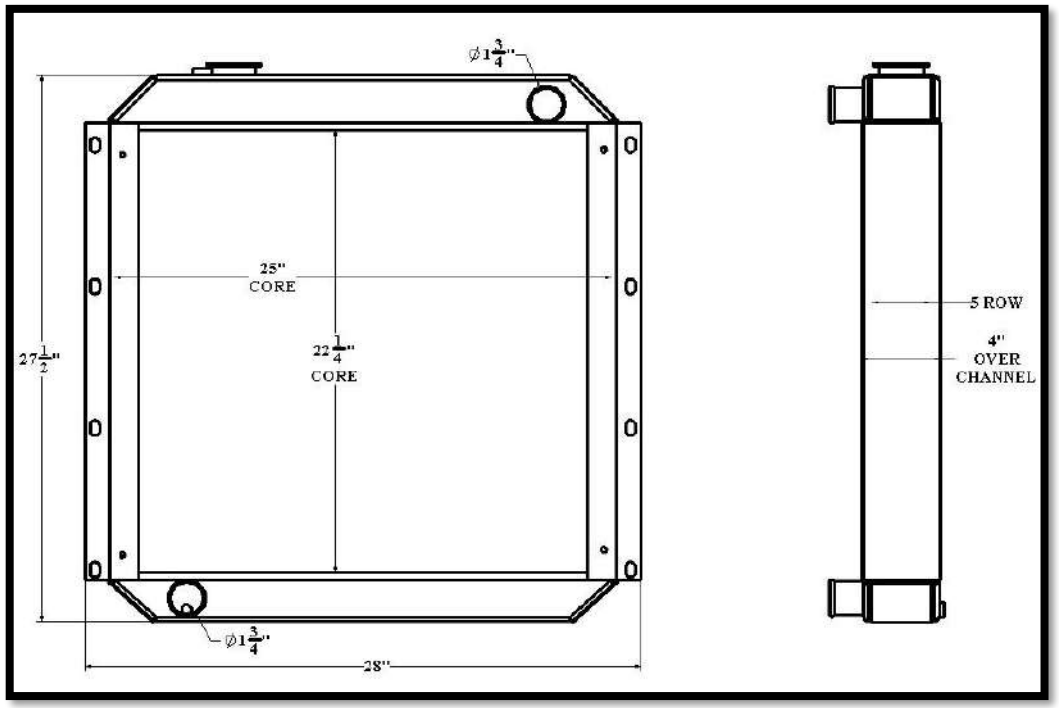

Overall Dimensions: 27-1/2” X 28” X 4”
Core: 22-1/4” X 25” X 5 ROW
Inlet: 1-3/4” OD
Outlet: 1-3/4” OD

ST299

Listed dimensions may vary slightly from OE

ST300

BGR Part Number: ST-0301-5I-F
GENERAC

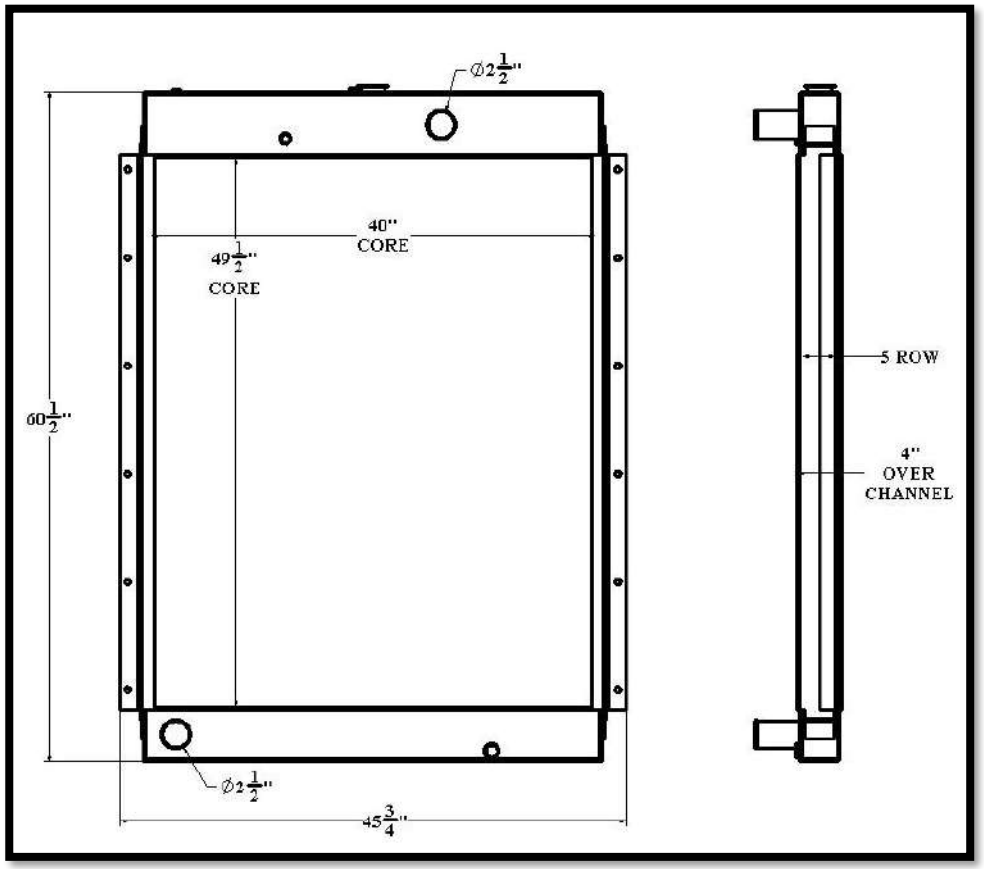

Overall Dimensions: 60-1/2” X 45-3/4” X 4”
Core: 49-1/2” X 40” X 5 ROW
Inlet: 2-1/2” OD
Outlet: 2-1/2” OD

Tel 1.800.774.2168
www.bgrradiator.com

BGR Part Number: ST-0302-3VTU-B
ONAN 0130-5996-01

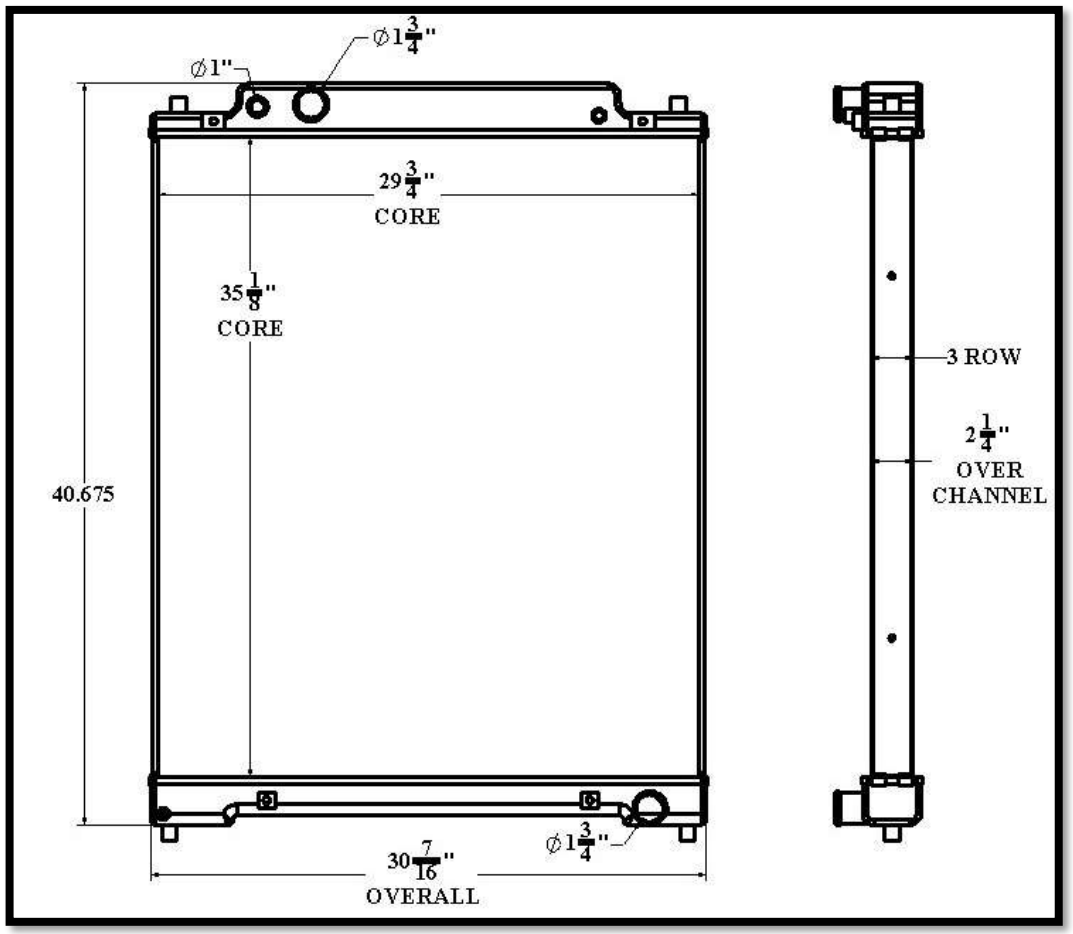

Overall Dimensions: 40.675” X 30-9/16” X 2-1/4”
Core: 35-1/8” X 29-3/4” X 3 ROW
Inlet: 1 & 1-3/4” OD
Outlet: 1-3/4” OD

Listed dimensions may vary slightly from OE

BGR Part Number: ST-0303-5I-F
Generac PN: 0K7454

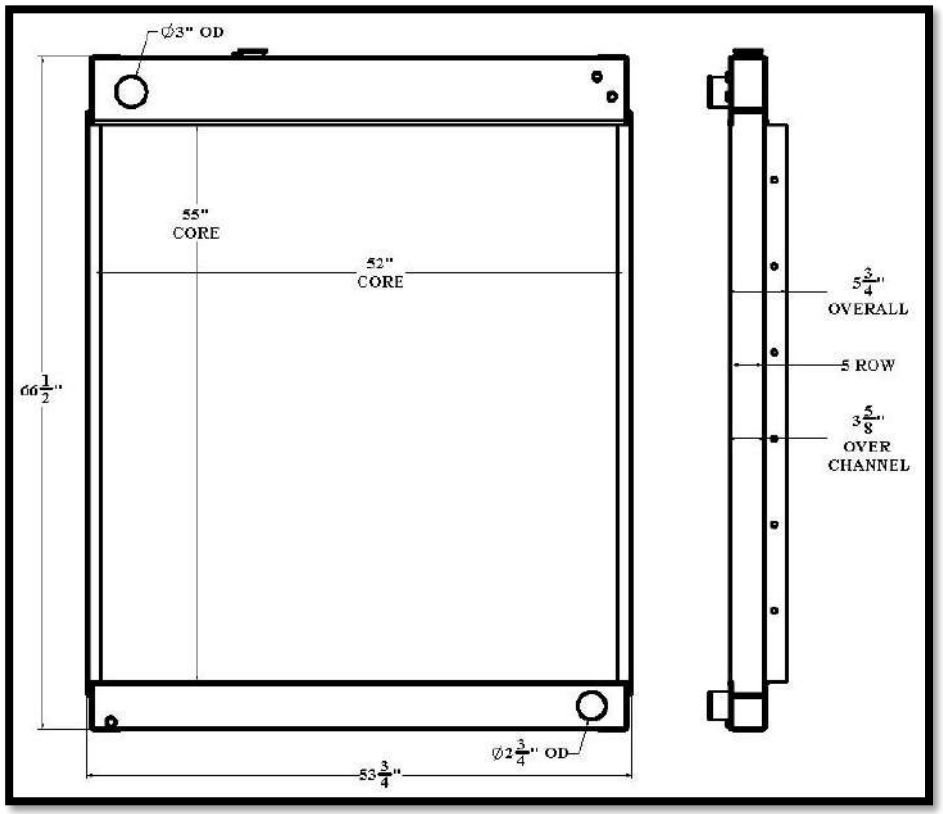

Overall Dimensions: 60-1/2” X 53-3/4” X 5-3/4”
Core: 55” X 52” X 5 ROW
Inlet: 3” OD
Outlet: 2-3/4” OD

Tel 1.800.774.2168
www.bgrradiator.com

BGR Part Number: ST-0304-5I-F
MODINE 1A11508, 030988, 130-0604

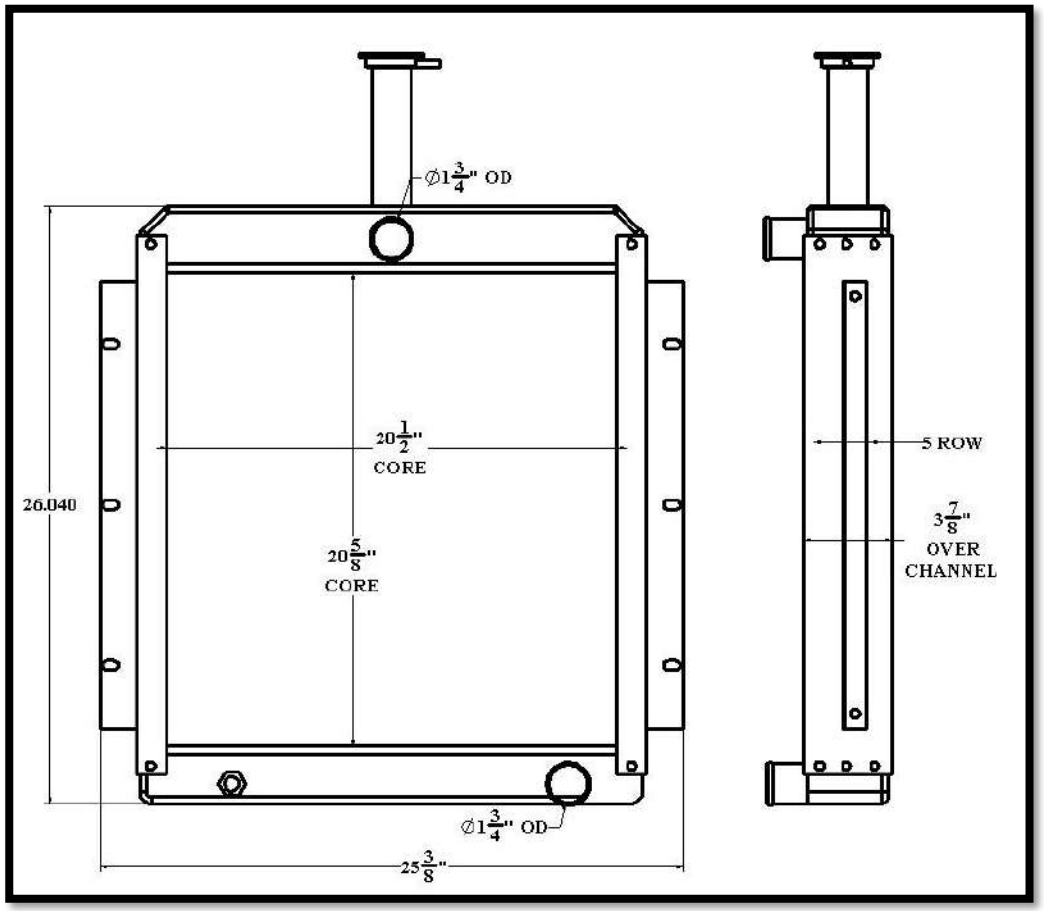

Overall Dimensions: 26.040” X 25-3/8” X 3-7/8”
Core: 20-5/8” X 20-1/2” X 3 ROW
Inlet: 1-3/4” OD
Outlet: 1-3/4” OD

Listed dimensions may vary slightly from OE

BGR Part Number: ST-0305-3M-NC
A-326018

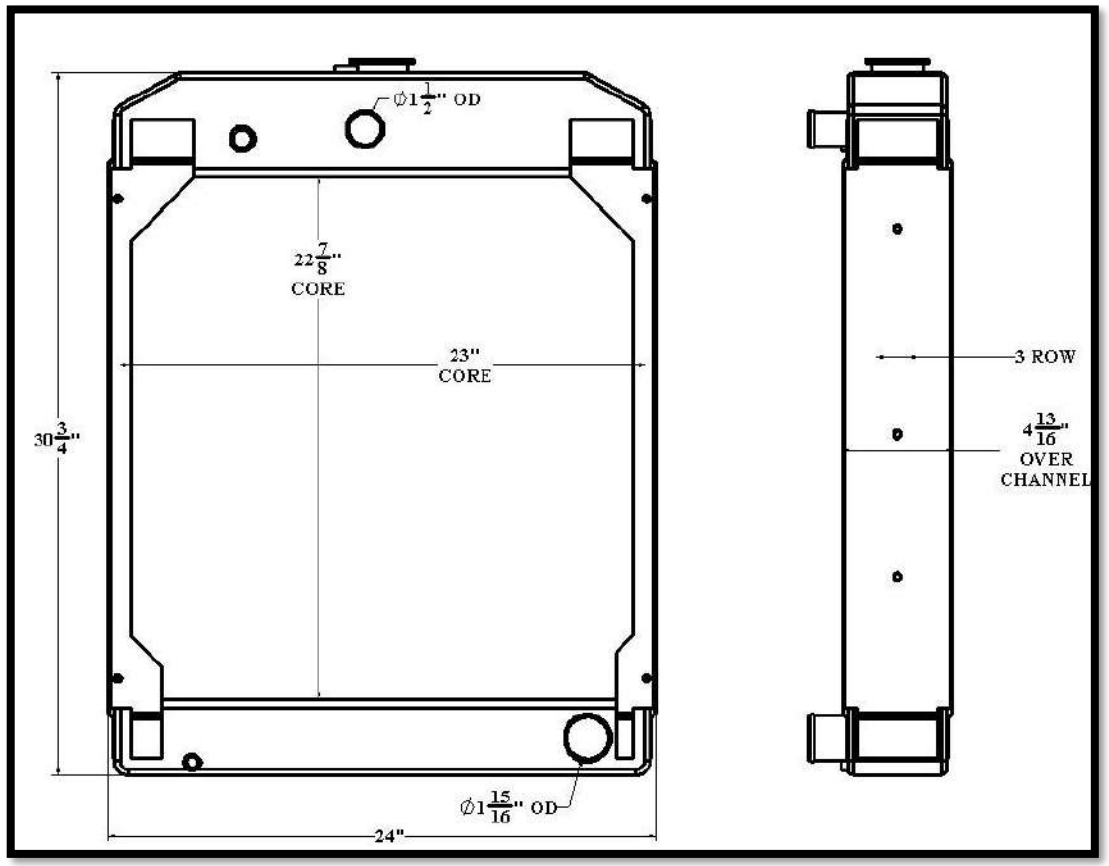

Overall Dimensions: 30-3/4” X 24” X 4-13/16”
Core: 22-7/8” X 23” X 3 ROW
Inlet: 1-1/2” OD
Outlet: 1-15/16” OD

Tel 1.800.774.2168
www.bgrradiator.com

BGR Part Number: ST-0306-3Z-F
RS-6757

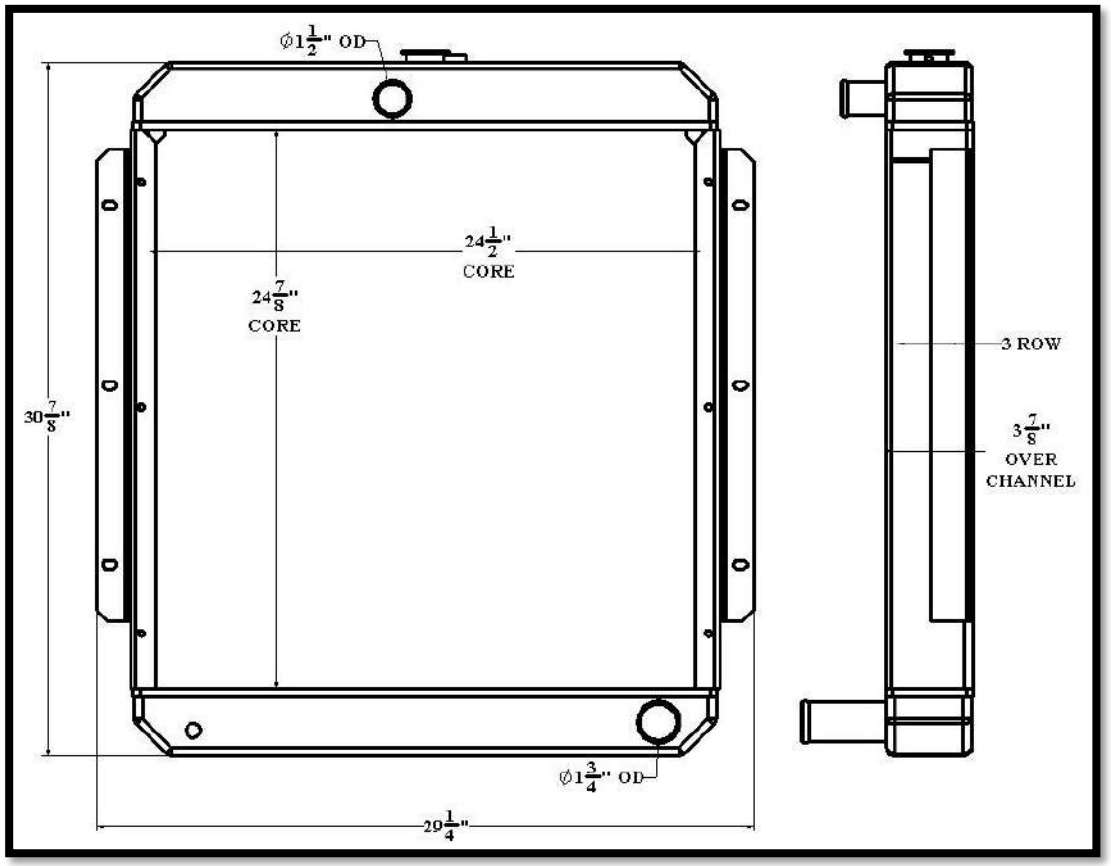

Overall Dimensions: 30-7/8” X 29-1/4” X 3-7/8”
Core: 24-7/8” X 24-1/2” X 3 ROW
Inlet: 1-1/2” OD
Outlet: 1-3/4” OD

Listed dimensions may vary slightly from OE

BGR Part Number: ST-0307-3M-NC
RADIATOR SPECIALTIES RS-5855 REV C, 45374-05-002

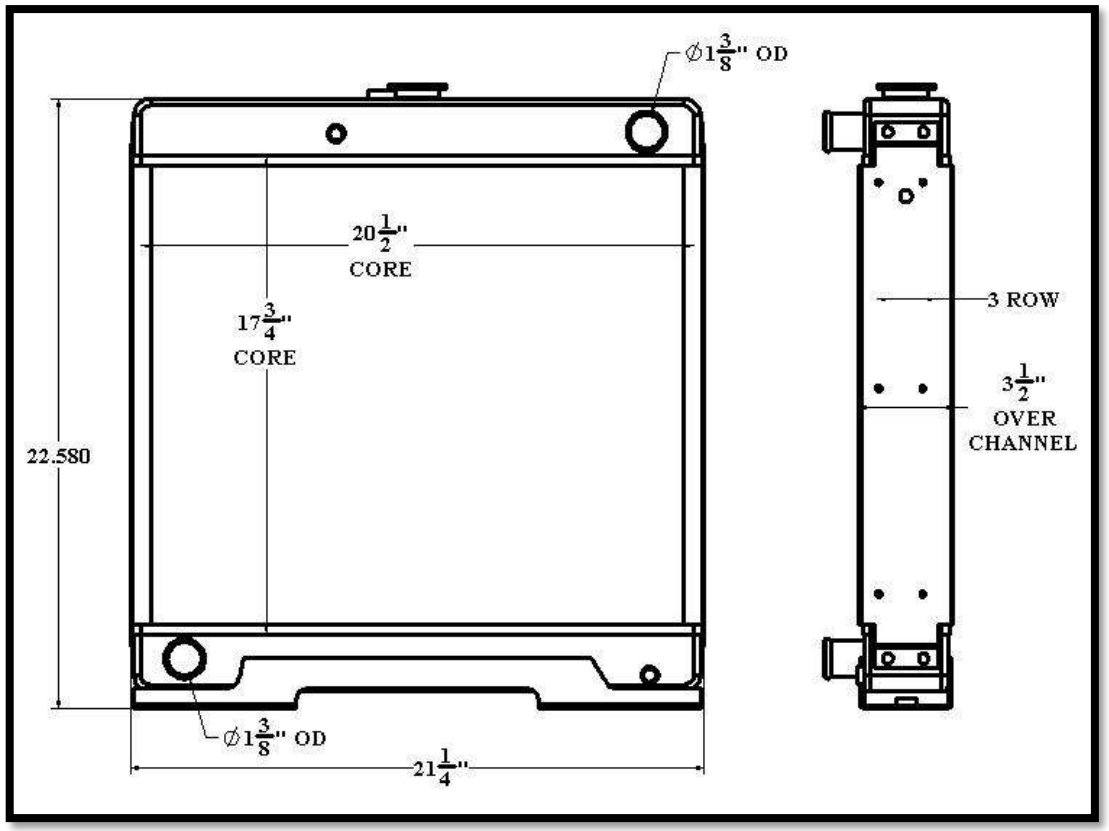

Overall Dimensions: 22.580” X 21-1/4” X 3-1/2”
Core: 17-3/4” X 20-1/2” X 3 ROW
Inlet: 1-3/8” OD
Outlet: 1-3/8” OD

Tel 1.800.774.2168
www.bgrradiator.com

BGR Part Number: ST-0308-3VT-NC
A-254774

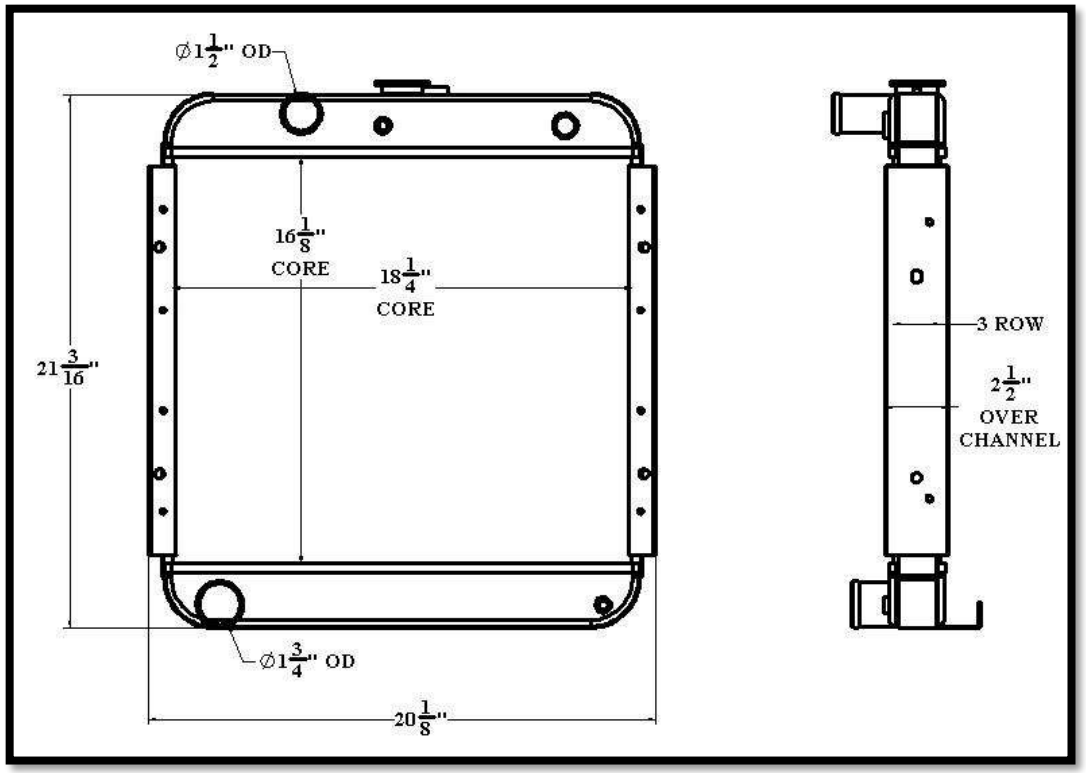

Overall Dimensions: 21-3/16” X 20-1/8” X 2-1/2”
Core: 16-1/8” X 18-1/4” X 3 ROW
Inlet: 1-1/2” OD
Outlet: 1-3/4” OD

ST307

Listed dimensions may vary slightly from OE

ST308

BGR Part Number: ST-0309-3M-F
CAT 3116DI, 125KW

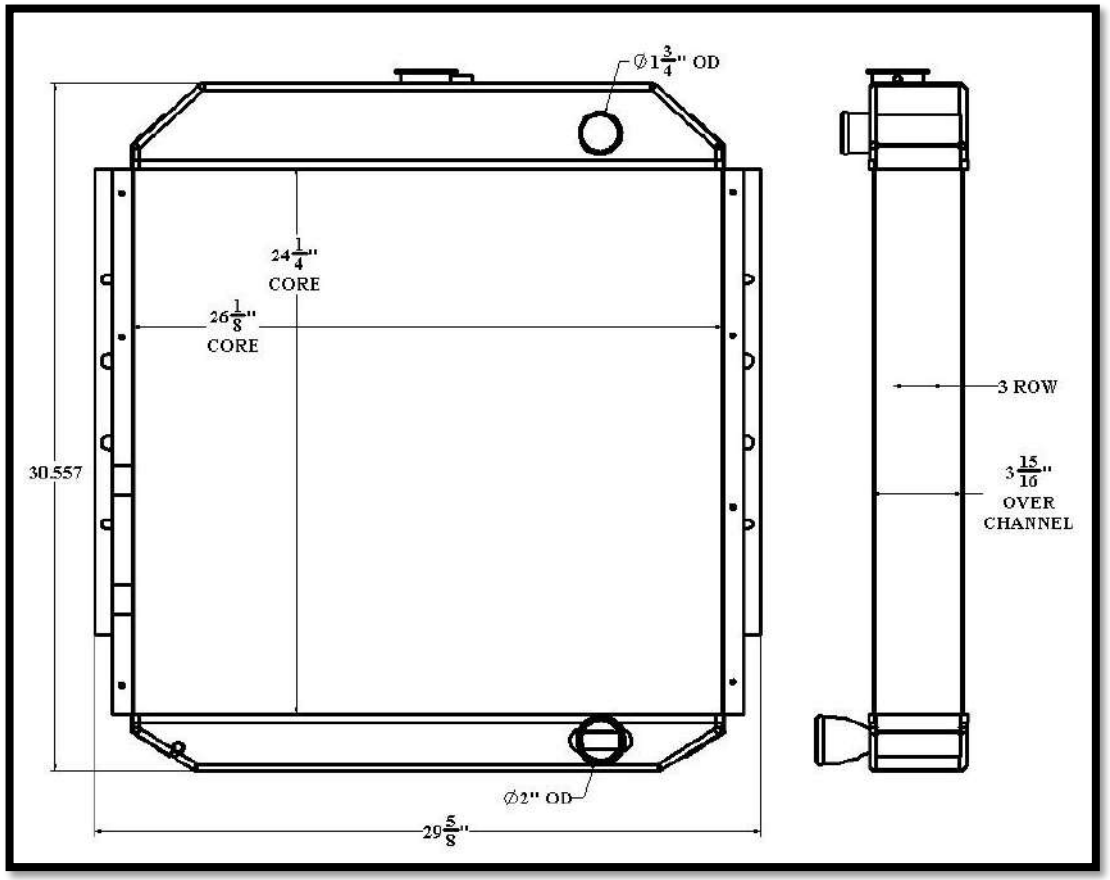

Overall Dimensions: 30.557” X 29-5/8” X 3-15/16”
Core: 24-1/4” X 26-1/8” X 3 ROW
Inlet: 1-3/4” OD
Outlet: 2” OD

Tel 1.800.774.2168
www.bgrradiator.com

BGR Part Number: ST-0310-2T-FM
45-60 KW, SDM, 30301051901

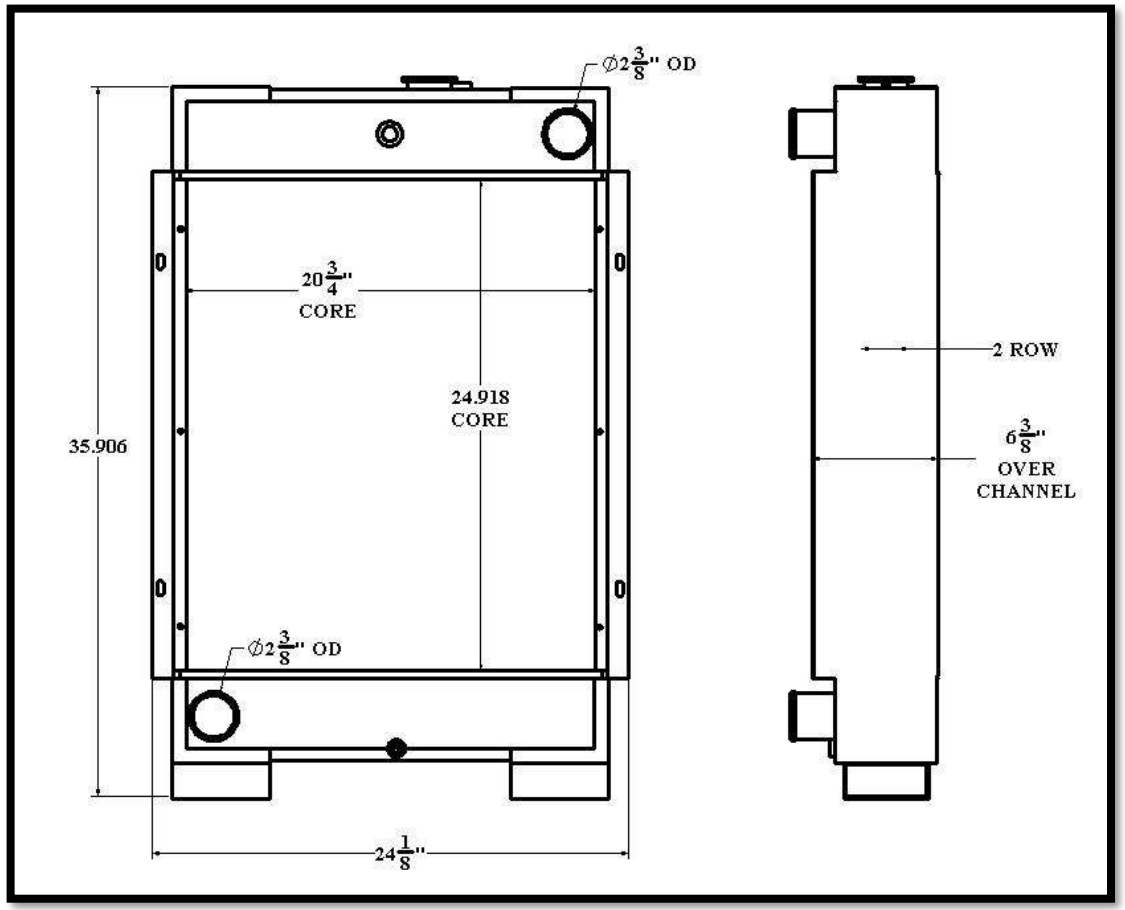

Overall Dimensions: 35.906” X 24-1/8” X 6-3/8”
Core: 24.918” X 20-3/4” X 2 ROW
Inlet: 2-3/8” OD
Outlet: 2-3/8” OD

Listed dimensions may vary slightly from OE

BGR Part Number: ST-0311-3VT-NC

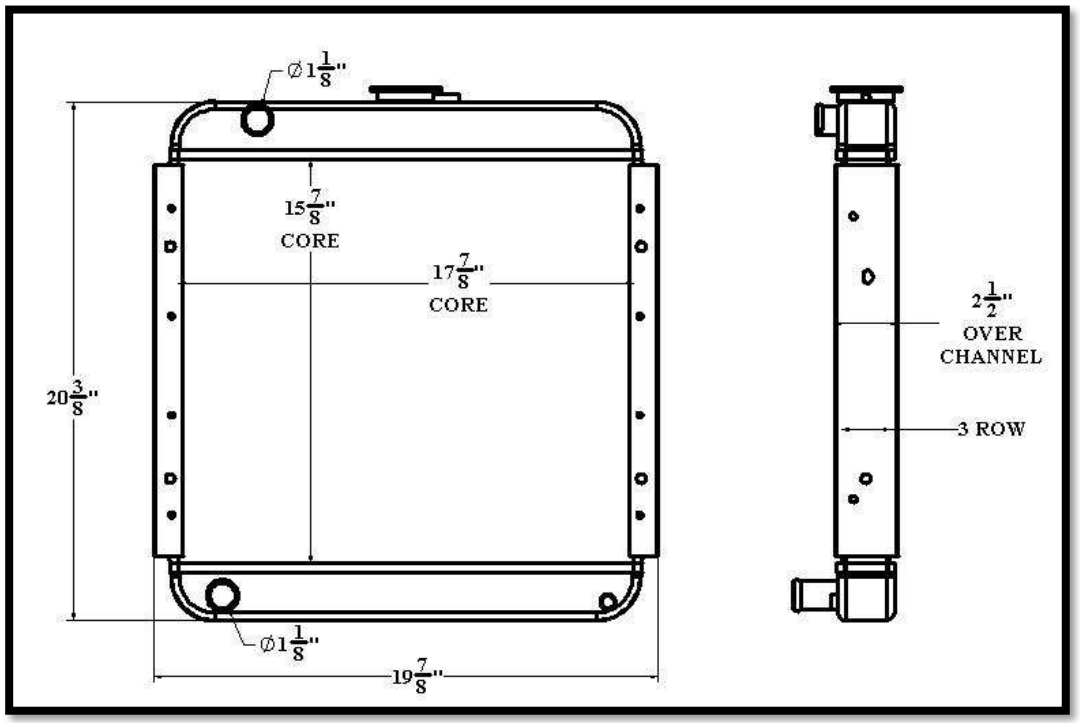

Overall Dimensions: 20-3/8” X 19-7/8” X 2-1/2”
Core: 15-7/8” X 17-7/8” X 3 ROW
Inlet: 1-1/8” OD
Outlet: 1-1/8” OD

Tel 1.800.774.2168
www.bgrradiator.com

BGR Part Number: ST-0312-6I-NC

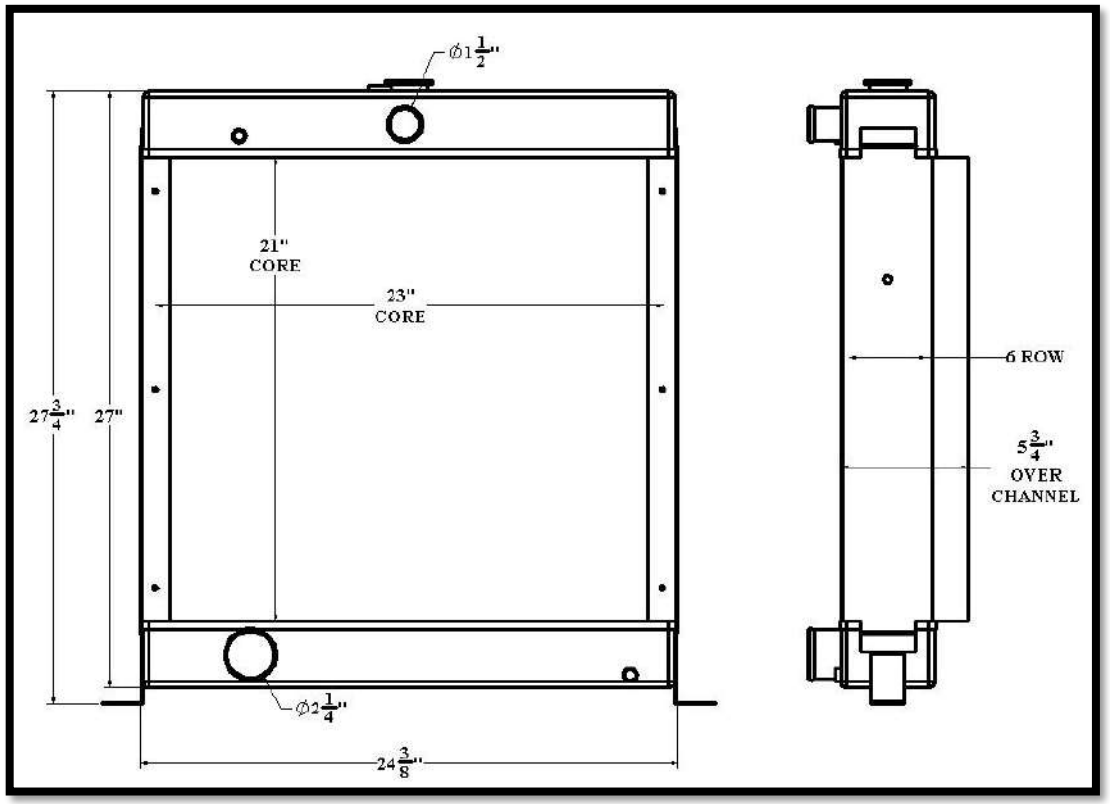

Overall Dimensions: 27-3/4” X 27” X 5-3/4”
Core: 21” X 23” X 6 ROW
Inlet: 1-3/4” OD
Outlet: 2” OD

ST311

Listed dimensions may vary slightly from OE

ST312

BGR Part Number: ST-0313-3M-NC
GM52728, RS-4948

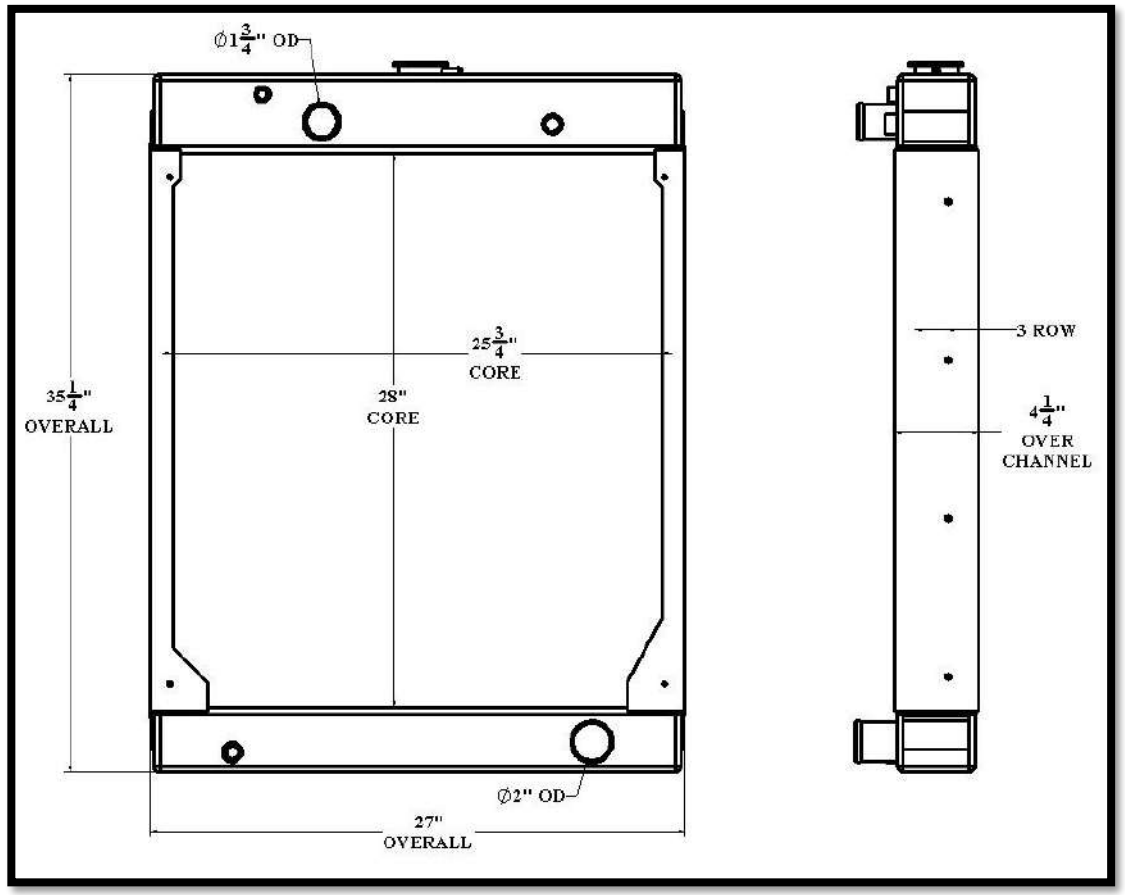

Overall Dimensions: 35-1/4” X 27” X 4-1/4”
Core: 28” X 25-3/4” X 3 ROW
Inlet: 1-3/4” OD
Outlet: 2” OD

Tel 1.800.774.2168
www.bgrradiator.com

BGR Part Number: ST-0314-5I-NC
1A14191, MODINE 130-314

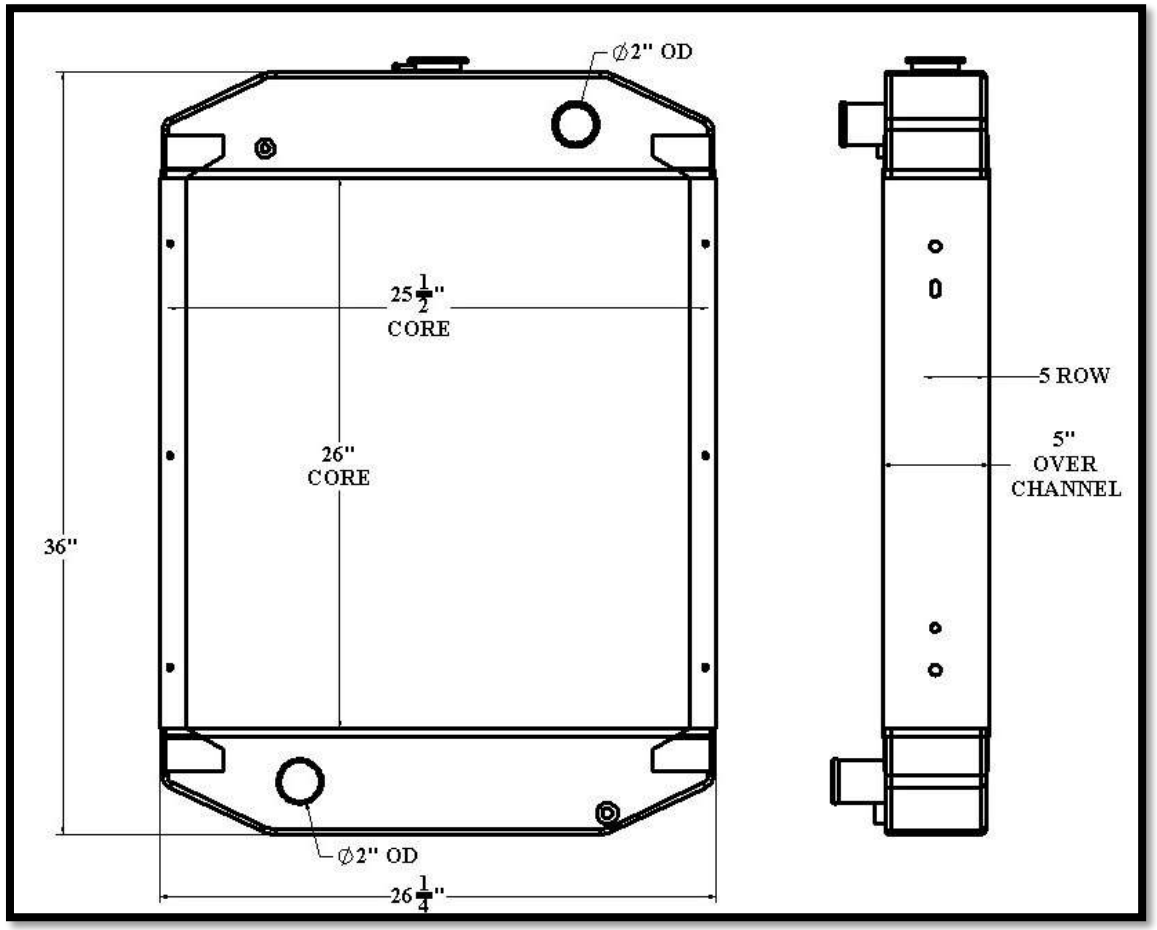

Overall Dimensions: 36” X 26-1/4” X 5”
Core: 26” X 25-1/2” X 5 ROW
Inlet: 2” OD
Outlet: 2” OD

ST313

Listed dimensions may vary slightly from OE

ST314

BGR Part Number: ST-0315-2Z-NC
R21741, 4Z807-17, SN05-2

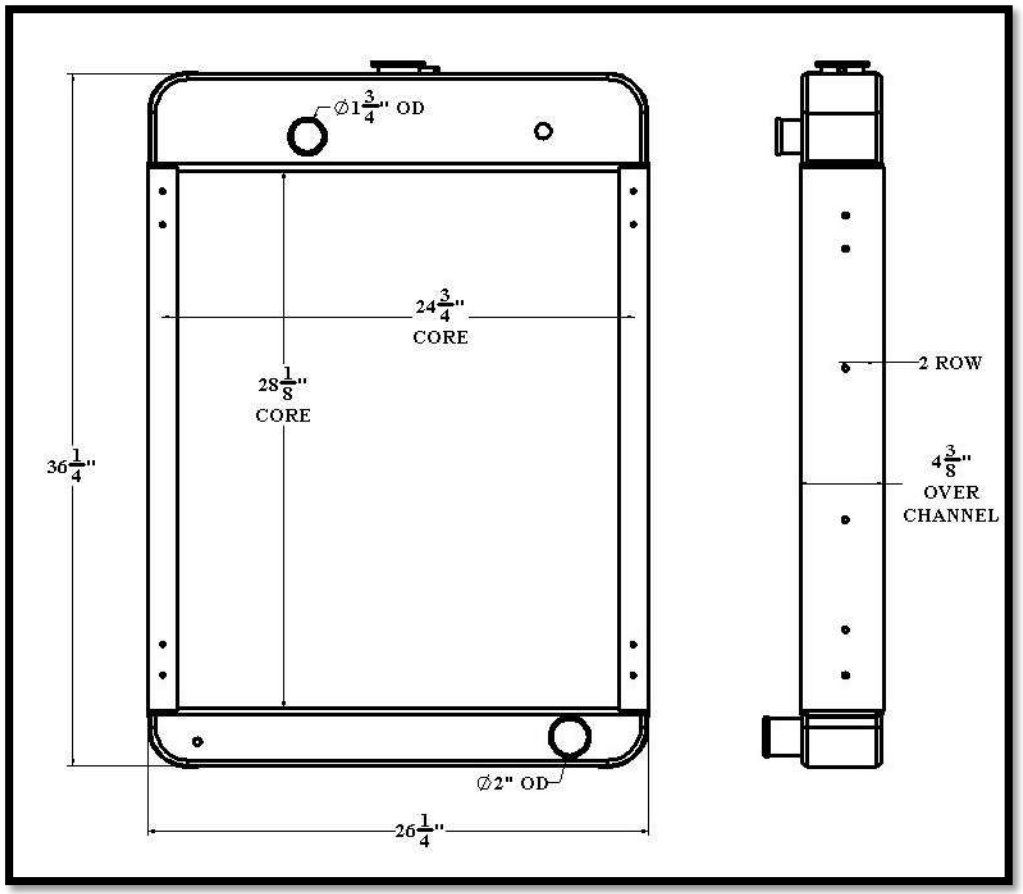

Overall Dimensions: 36-1/4” X 26-1/4” X 4-3/8”
Core: 28-1/8” X 24-3/4” X 2 ROW
Inlet: 1-3/4” OD
Outlet: 2” OD

Tel 1.800.774.2168
www.bgrradiator.com

BGR Part Number: ST-0316-3M-RB

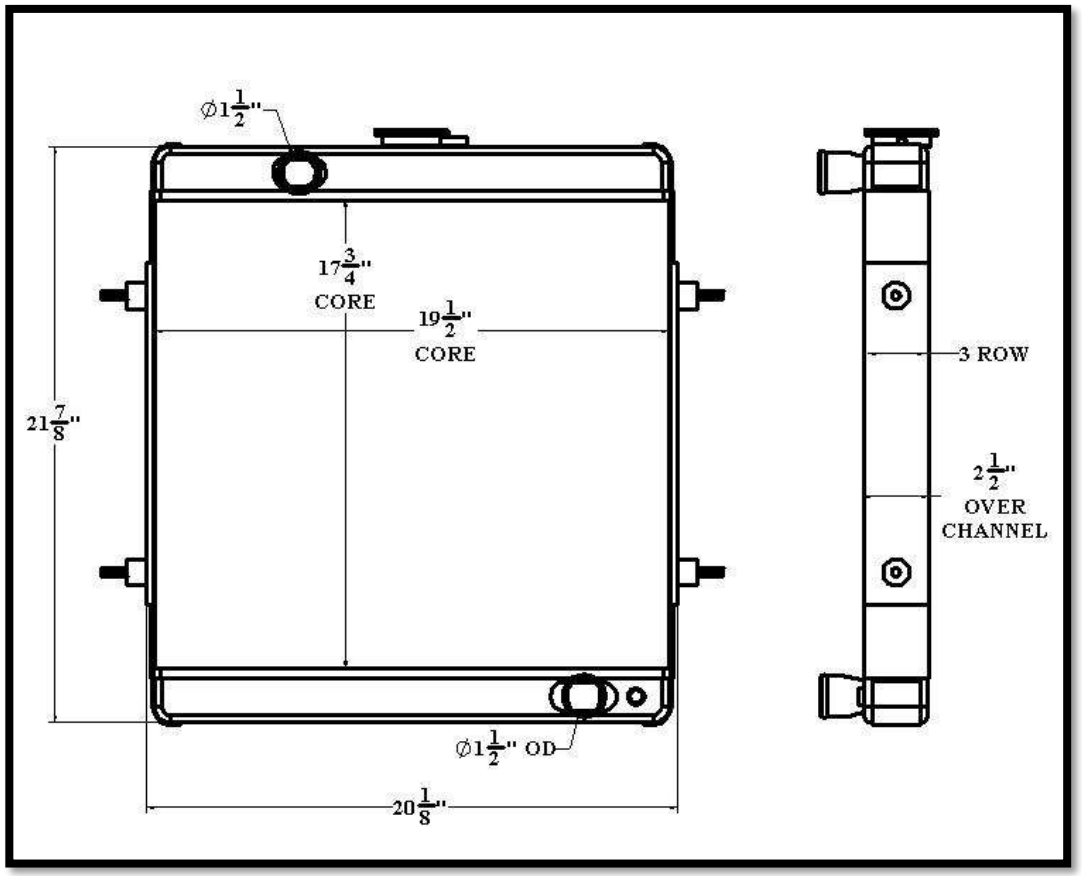

Overall Dimensions: 21-7/8” X 20-1/8” X 2-1/2”
Core: 17-3/4” X 19-1/2” X 3 ROW
Inlet: 1-1/2” OD
Outlet: 1-1/2” OD

Listed dimensions may vary slightly from OE

BGR Part Number: ST-0317-3I-NC

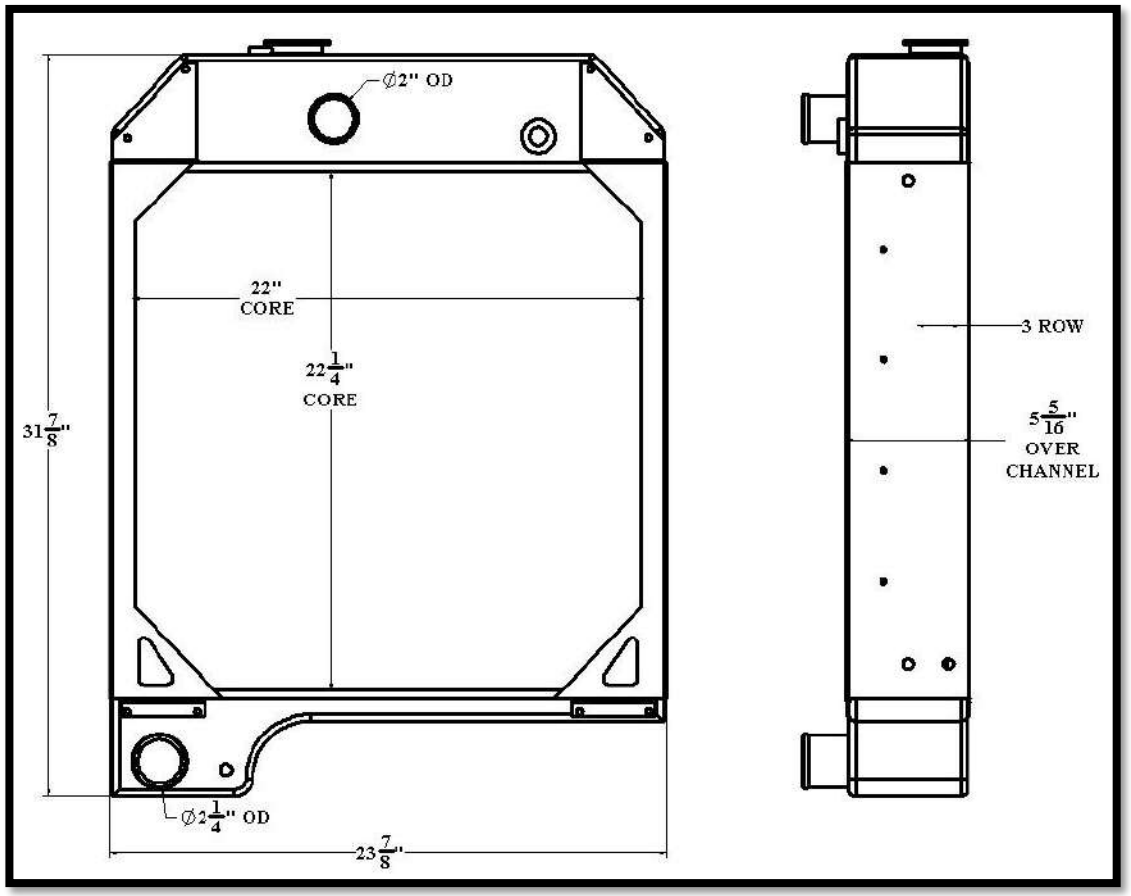

Overall Dimensions: 31-7/8” X 23-7/8” X 5-5/16”
Core: 22-1/4” X 22” X 3 ROW
Inlet: 2” OD
Outlet: 2-1/4” OD

Tel 1.800.774.2168
www.bgrradiator.com

BGR Part Number: ST-0318-6I-NC

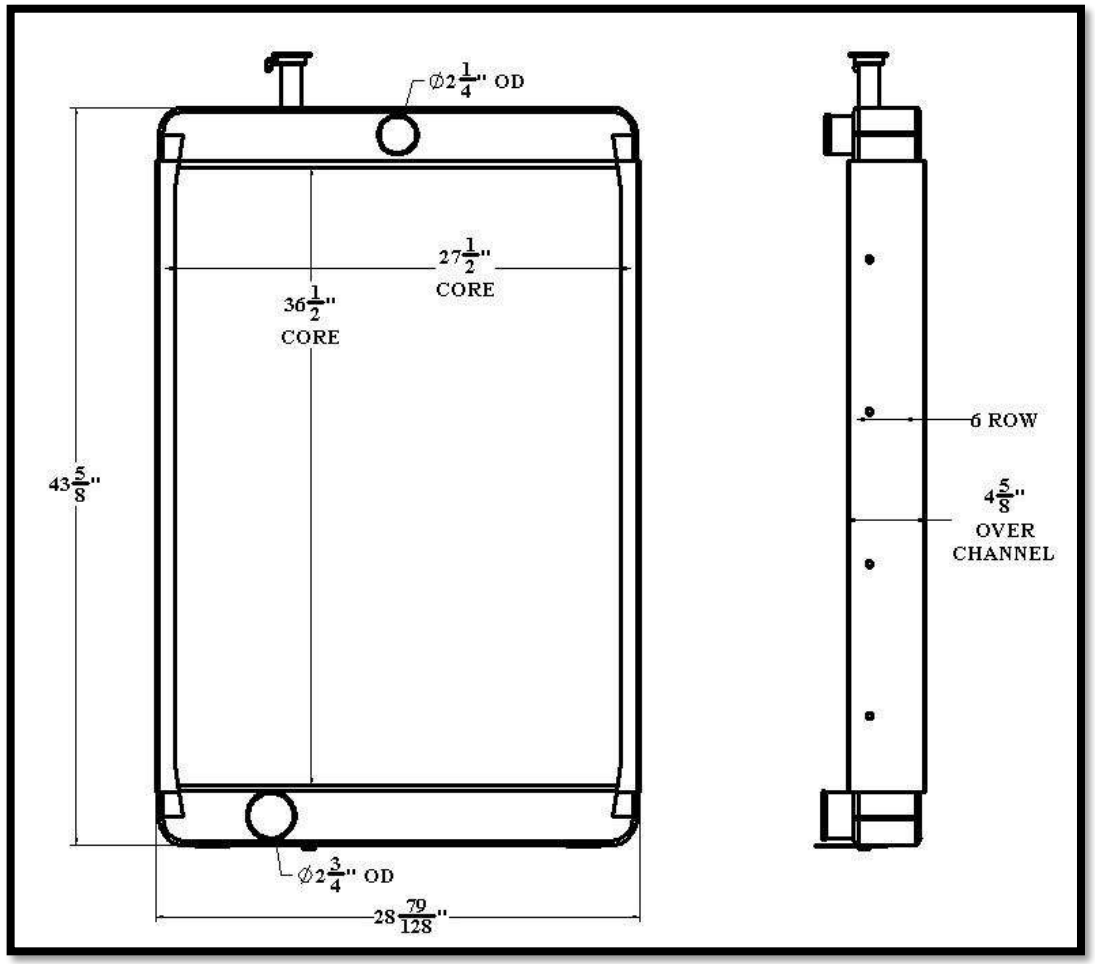

Overall Dimensions: 45-5/8” X 28-79/128 X 4-5/8”
Core: 36-1/2” X 27-1/2” X 3 ROW
Inlet: 2-1/4” OD
Outlet: 2-3/4” OD

ST317

Listed dimensions may vary slightly from OE

ST318

BGR Part Number: ST-0319-6I-F
FORD 460 TURBO GENSET ENGINE

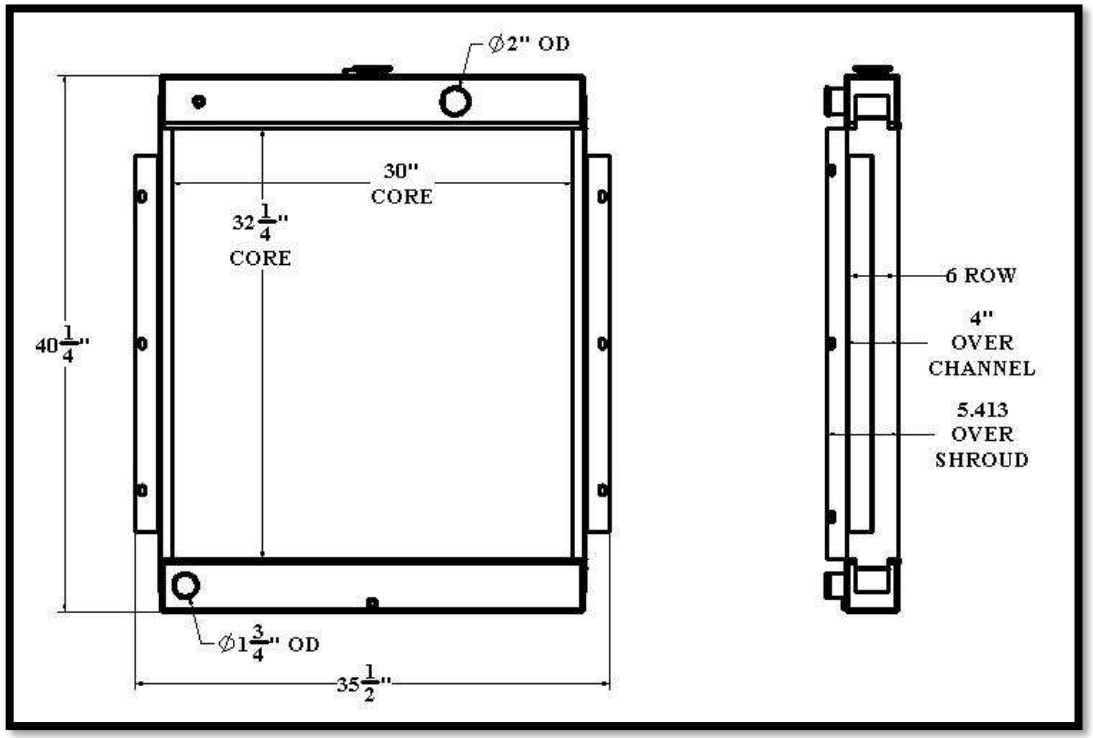

Overall Dimensions: 40-1/4” X 35-1/2” X 5.413”
Core: 32-1/4” X 30” X 6 ROW
Inlet: 2” OD
Outlet: 1-3/4” OD

Tel 1.800.774.2168
www.bgrradiator.com

BGR Part Number: ST-0320-4I-F
ONAN 130-0354

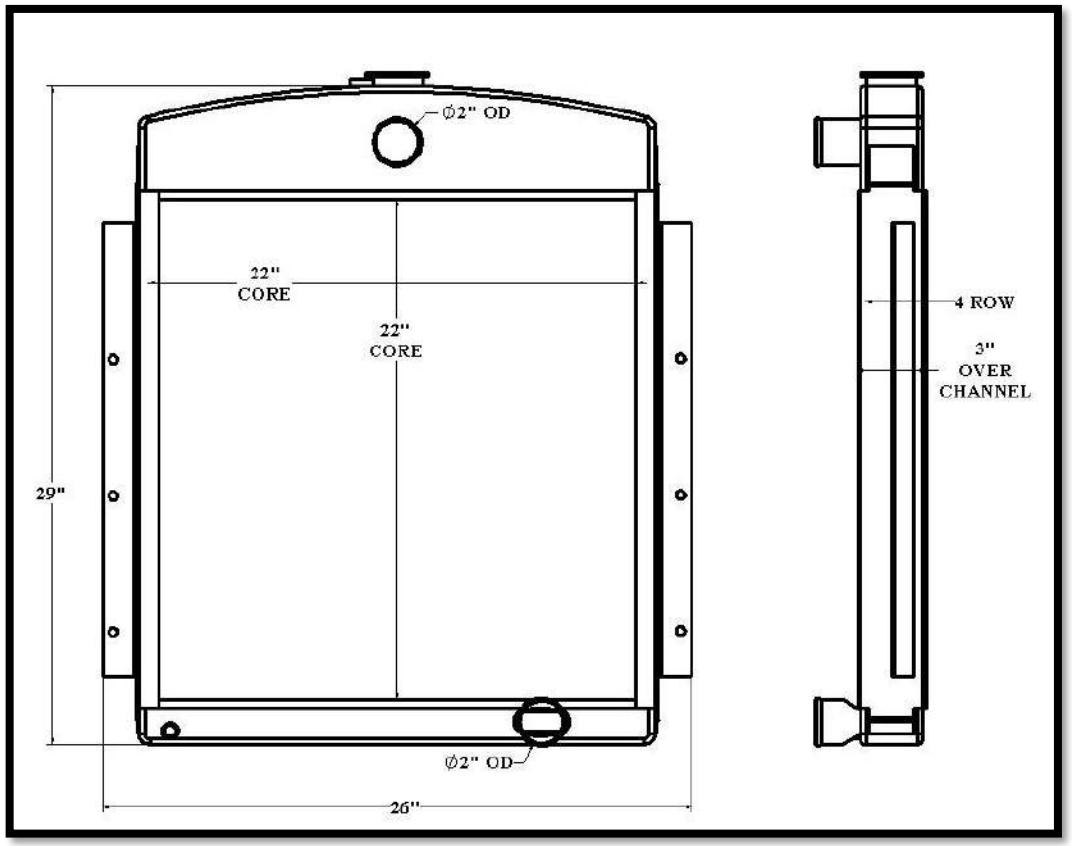

Overall Dimensions: 29” X 26 X 3”
Core: 22” X 22” X 4 ROW
Inlet: 2” OD
Outlet: 2” OD

Listed dimensions may vary slightly from OE

BGR Part Number: ST-0321-2VTW-NC

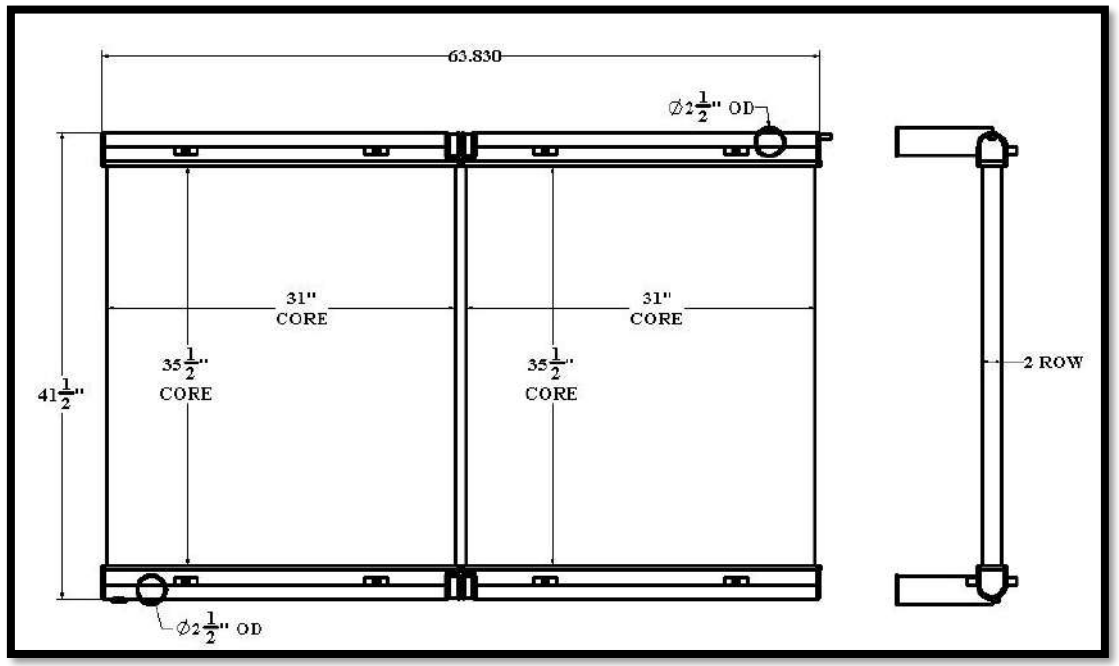

Overall Dimensions: 41-1/2” X 63.830”
Core: 22-1/4” X 22” X 3 ROW
Inlet: 2-1/2” OD
Outlet: 2-1/4” OD

Tel 1.800.774.2168
www.bgrradiator.com

BGR Part Number: ST-0322-4I-NC

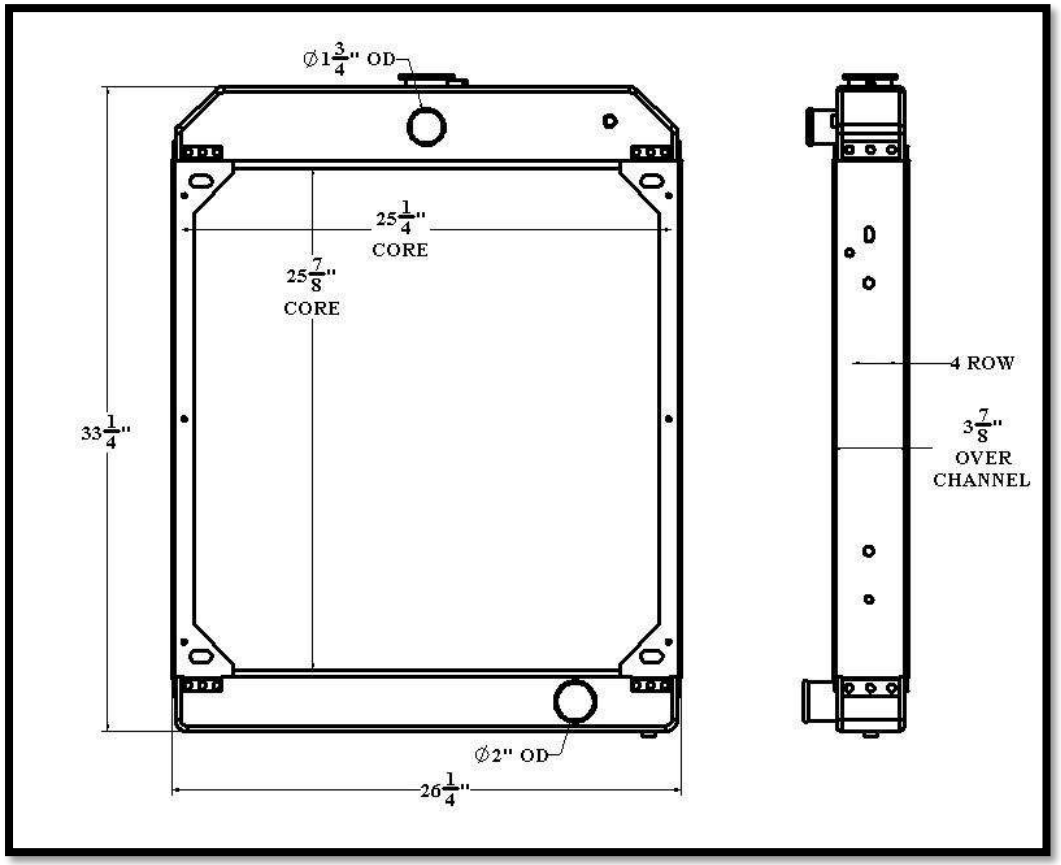

Overall Dimensions: 33-1/4” X 25-7/8 X 3-7/8”
Core: 25-7/8” X 25-1/4” X 4 ROW
Inlet: 1-3/4” OD
Outlet: 2” OD

ST321

Listed dimensions may vary slightly from OE

ST322

BGR Part Number: ST-0323-7P-EF

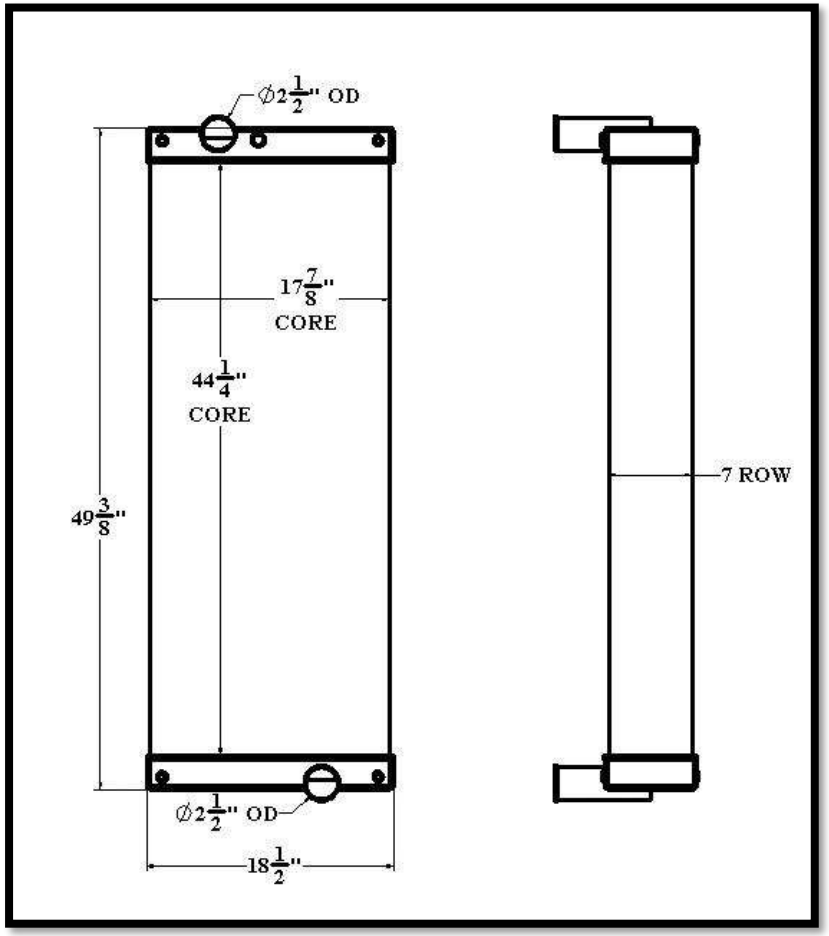

Overall Dimensions: 49-3/8” X 18-1/2”
Core: 44-1/4” X 17-7/8” X 7 ROW
Inlet: 2-1/2” OD
Outlet: 2-1/2” OD

Tel 1.800.774.2168
www.bgrradiator.com

BGR Part Number: ST-0324-5Z-EF

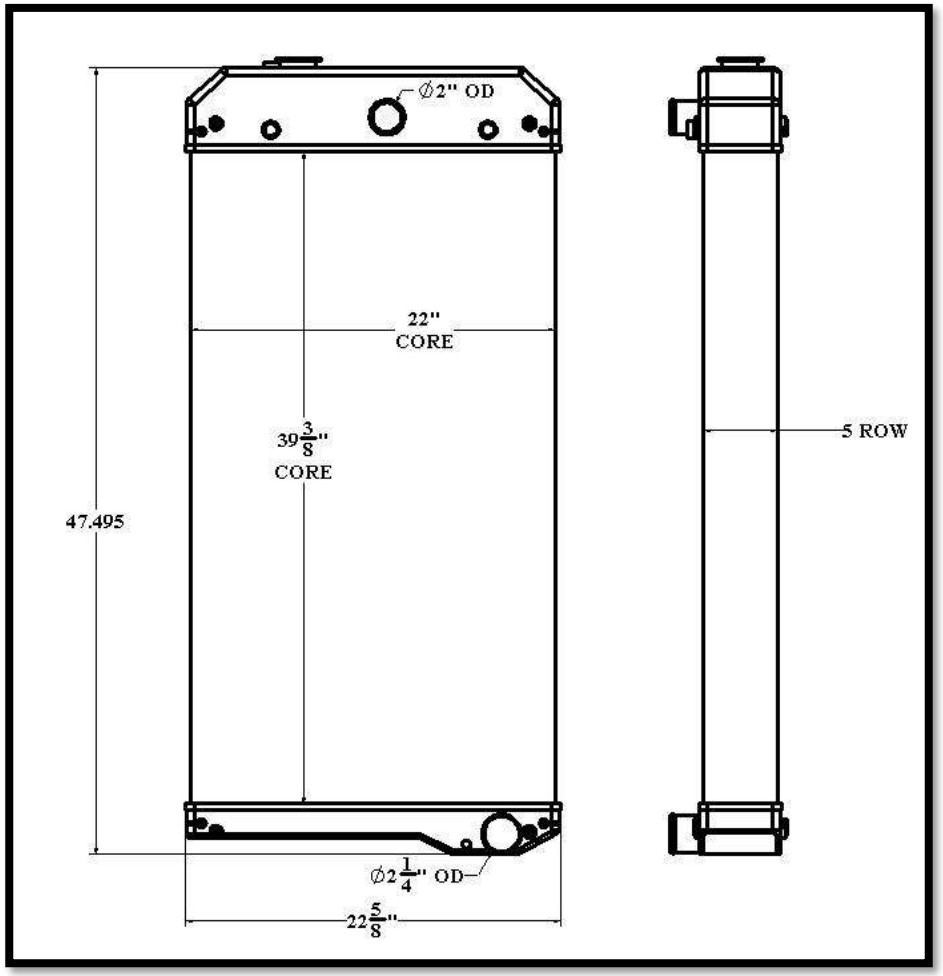

Overall Dimensions: 47.495” X 22-5/8
Core: 39-3/8” X 22” X 5 ROW
Inlet: 2” OD
Outlet: 2-1/4” OD

ST323

Listed dimensions may vary slightly from OE

ST324

BGR Part Number: ST-0325-2VT-NC
A-326402 REV A

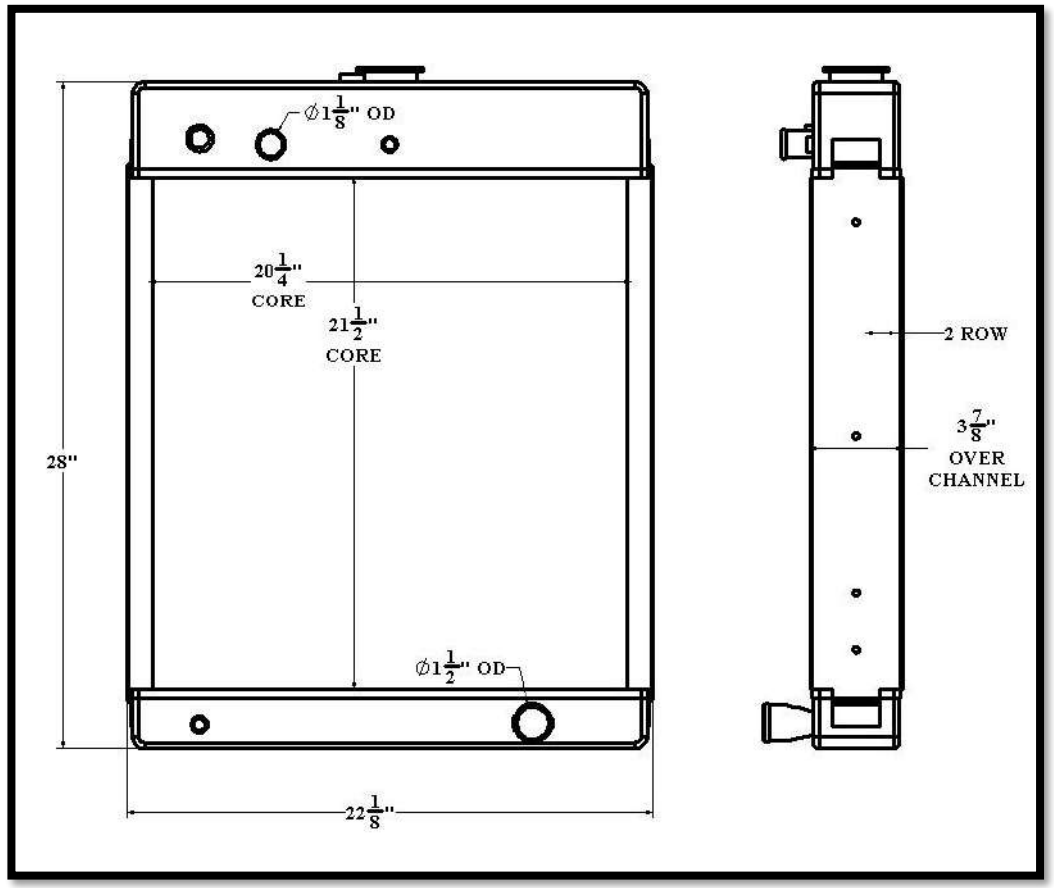

Overall Dimensions: 28” X 22-1/8” X 3-7/8”
Core: 20-1/4” X 21-1/2” X 2 ROW
Inlet: 1-1/8” OD
Outlet: 1-1/2” OD

Tel 1.800.774.2168
www.bgrradiator.com

BGR Part Number: ST-0326-4I-F
GENERAC GENERATOR

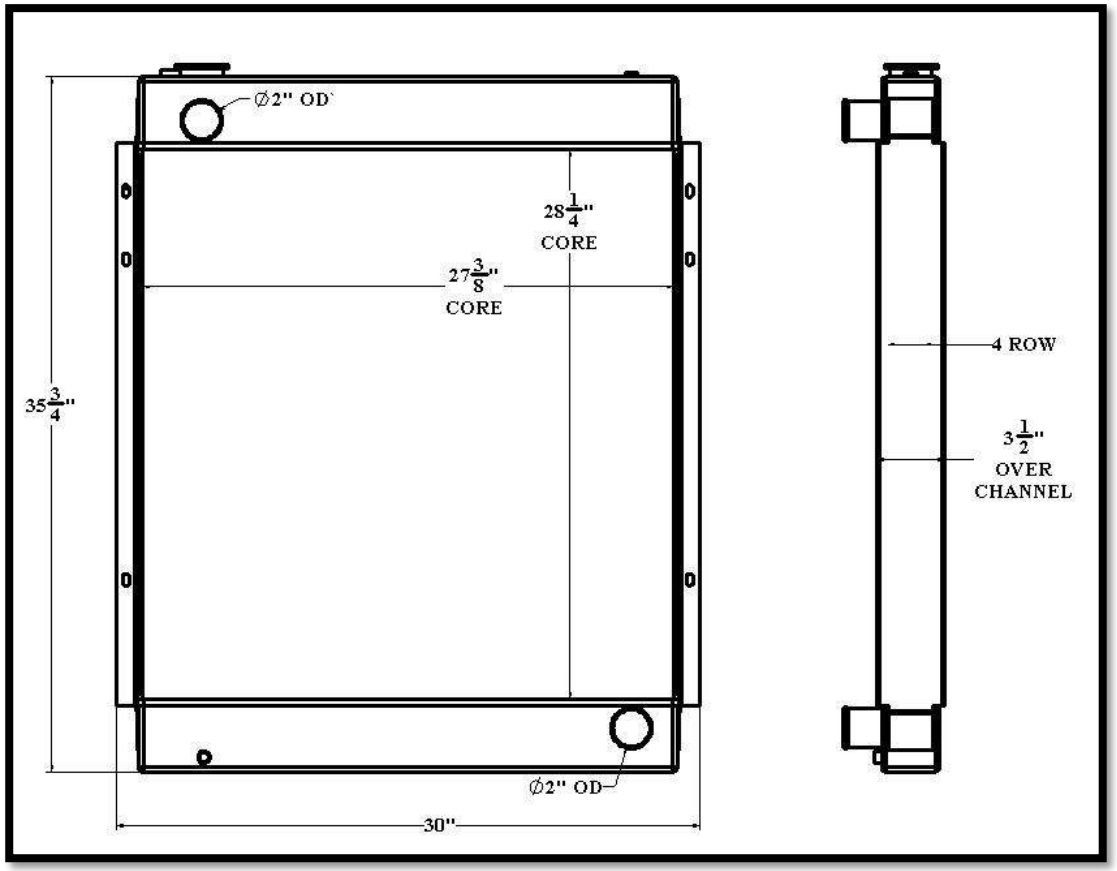

Overall Dimensions: 35-3/4” X 30 X 3-1/2
Core: 28-1/4” X 27-3/8” X 4 ROW
Inlet: 2” OD
Outlet: 2” OD

Listed dimensions may vary slightly from OE

BGR Part Number: ST-0327-3M-F
SR89, A068H458

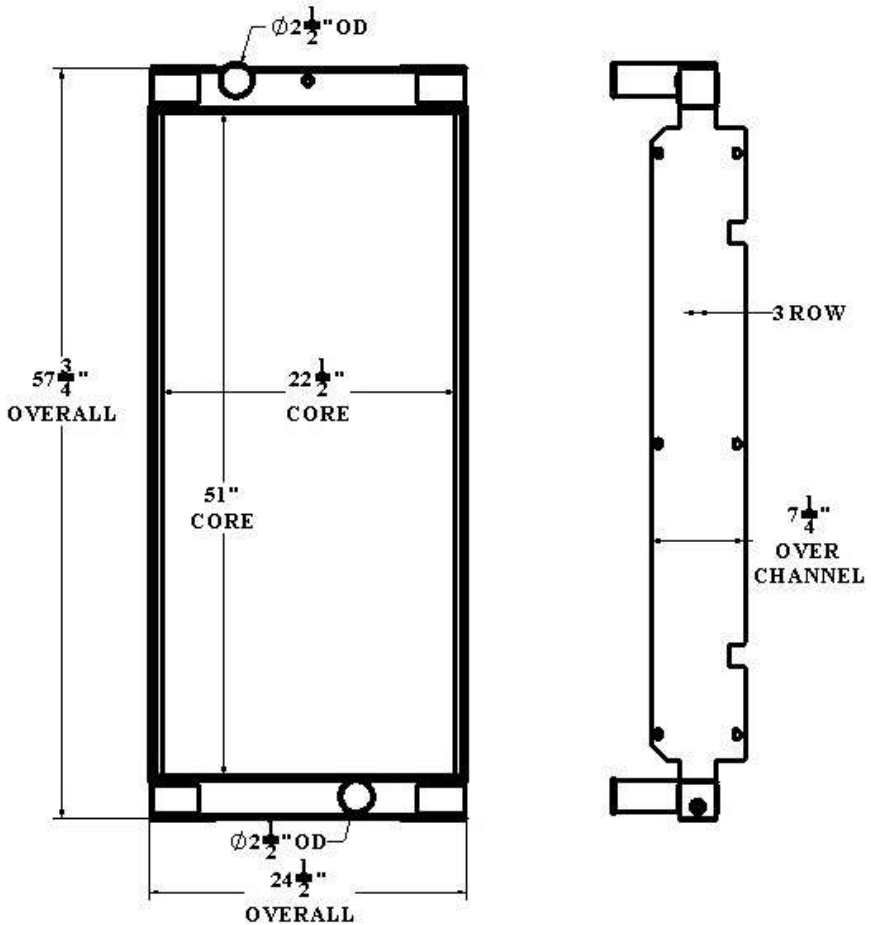

Overall Dimensions: 57-3/4” X 24-1/2” X 7-1/4”
Core: 51” X 22-1/2” X 3 ROW
Inlet: 2-1/2”OD
Outlet: 2-1/2”OD

Tel 1.800.774.2168
www.bgrradiator.com

BGR Part Number: ST-0328-5I-NC
PSI 32000300, 36087-01-094, REV H

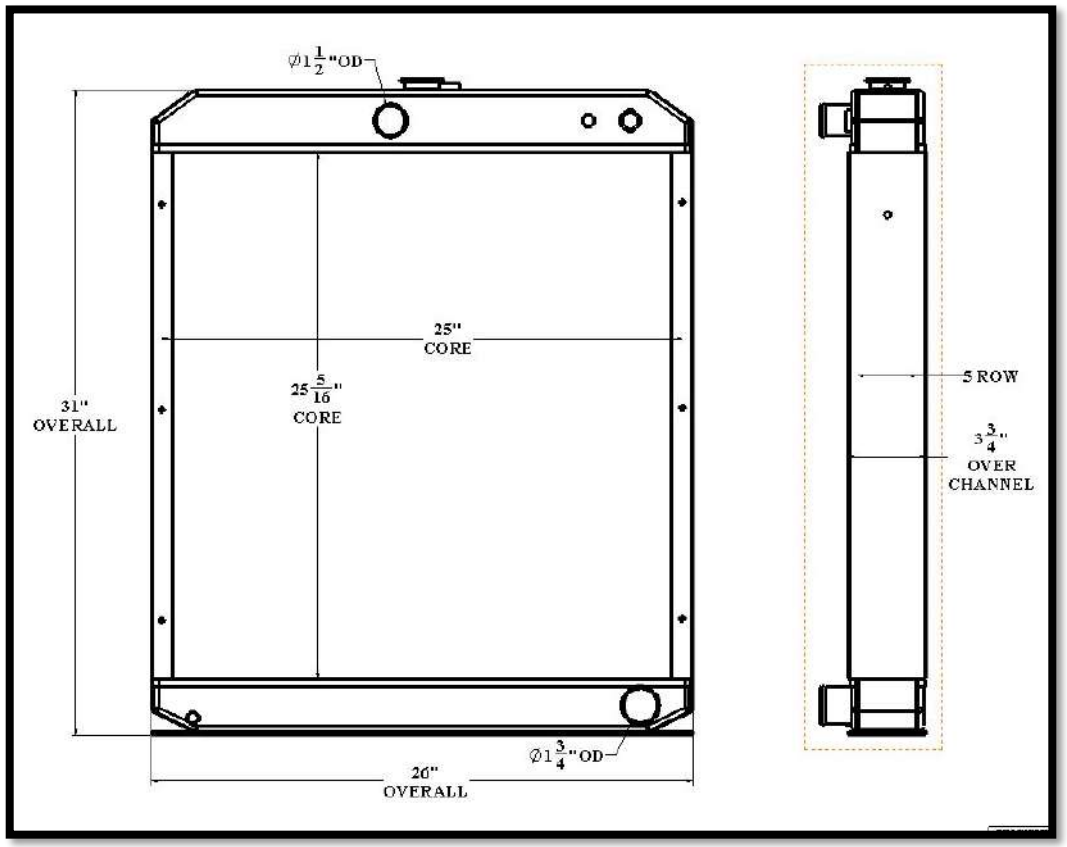

Overall Dimensions: 31” X 26 X 3-3/4”
Core: 25-5/16” X 25” X 5 ROW
Inlet: 1-1/2” OD
Outlet: 1-3/4” OD

Listed dimensions may vary slightly from OE

BGR Part Number: ST-0329-5I-NC
KOHLER GM10988, 1A18486

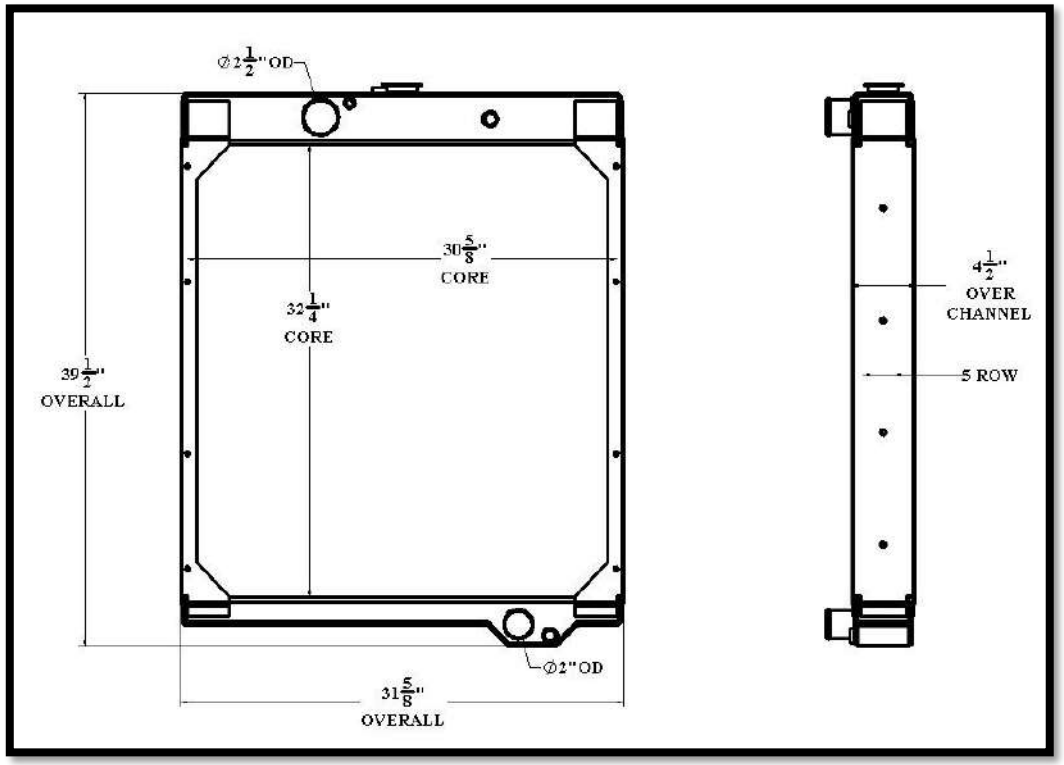

Overall Dimensions: 39-1/2” X 31-5/8” X 4-1/2”
Core: 32-1/4” X 30-5/8” X 5 ROW
Inlet: 2-1/2” OD
Outlet: 2” OD

Tel 1.800.774.2168
www.bgrradiator.com

BGR Part Number: ST-0330-6M-NC
0130-4357-01 MODINE

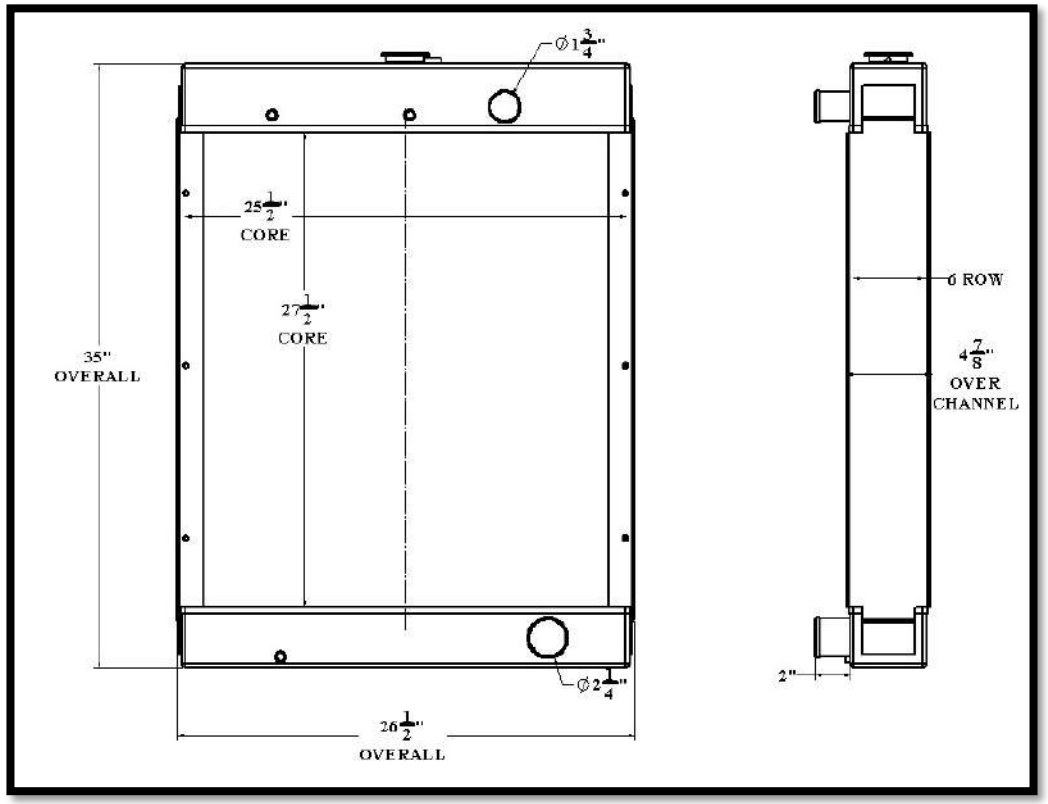

Overall Dimensions: 35” X 26-1/2” X 4-7/8”
Core: 27-1/2” X 25-1/2” X 6 ROW
Inlet: 1-3/4” OD
Outlet: 2-1/4” OD

Listed dimensions may vary slightly from OE

BGR Part Number: ST-0331-8M-NC
RS3510

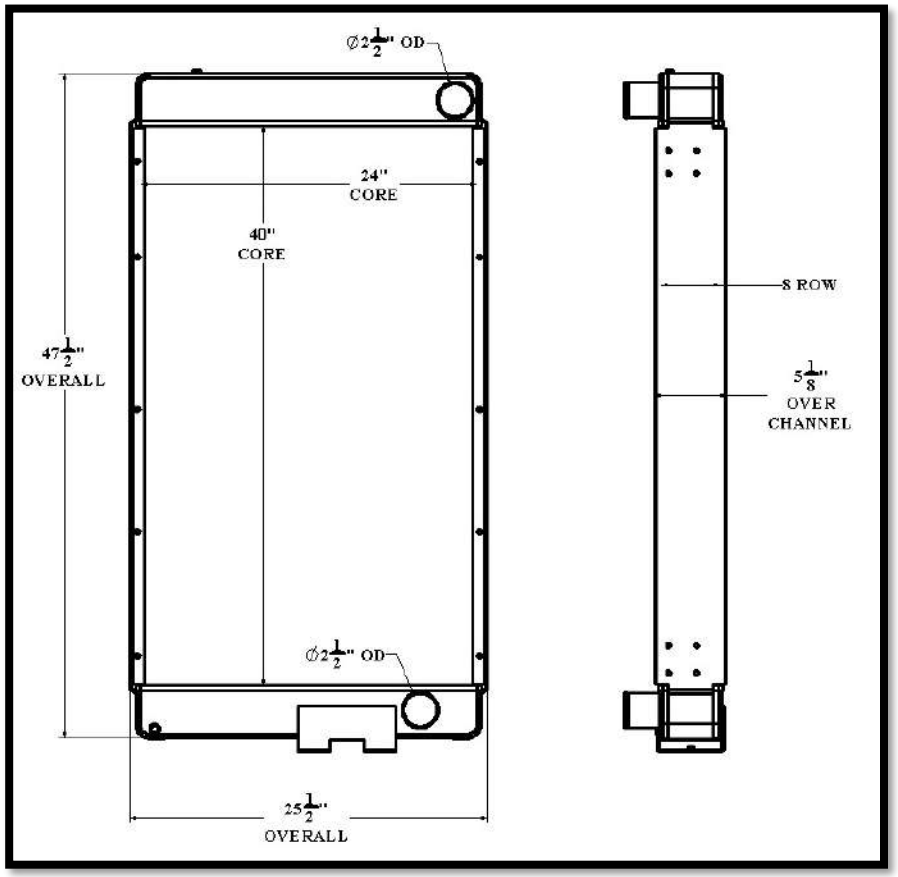

Overall Dimensions: 47-1/2” X 25-1/2” X 5-1/8”
Core: 40” X 24” X 8 ROW
Inlet: 2-1/2” OD
Outlet: 2-1/2” OD

Tel 1.800.774.2168
www.bgrradiator.com

BGR Part Number: ST-0332-4I-B

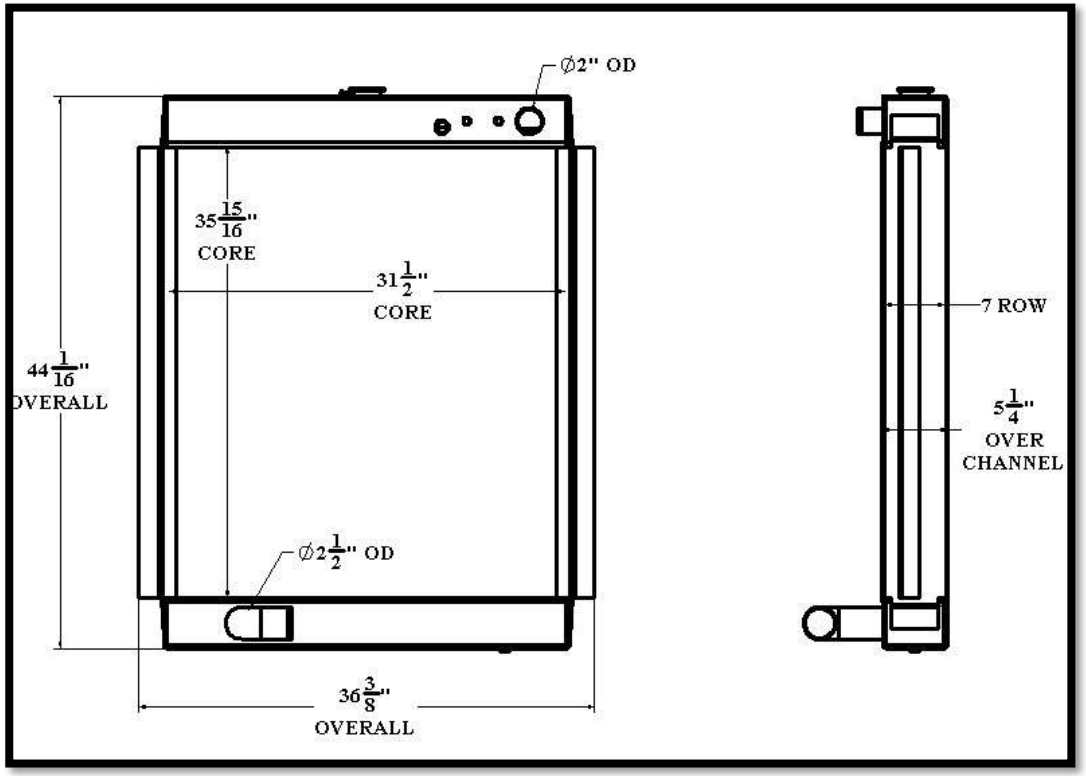

Overall Dimensions: 41-1/16” X 36-3/8” X 5-1/4”
Core: 35-15/16” X 31-1/2” X 7 ROW
Inlet: 2” OD
Outlet: 2-1/2” OD

ST331

Listed dimensions may vary slightly from OE

ST332

BGR Part Number: ST-0333-4I-NC

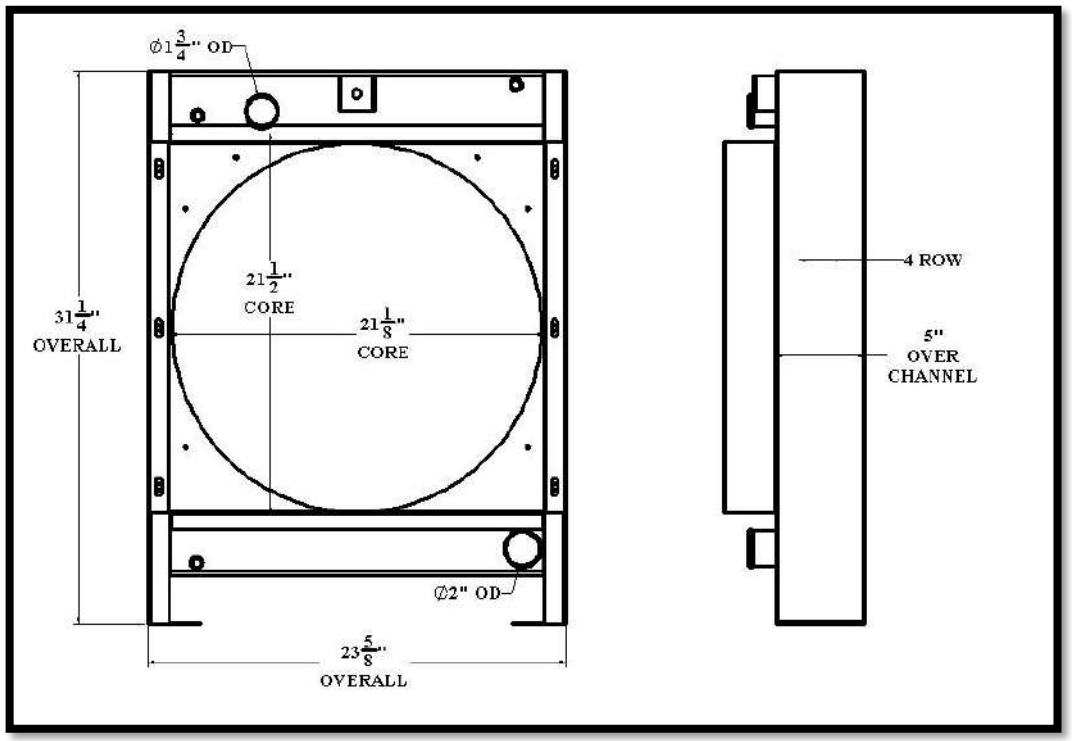

Overall Dimensions: 31-1/4” X 23-5/8” X 5”
Core: 21-1/2” X 12-1/8” X 4 ROW
Inlet: 1-3/4” OD
Outlet: 2” OD

Tel 1.800.774.2168
www.bgrradiator.com

BGR Part Number: ST-0334-4I-B
OLYMPIAN 120-331-174

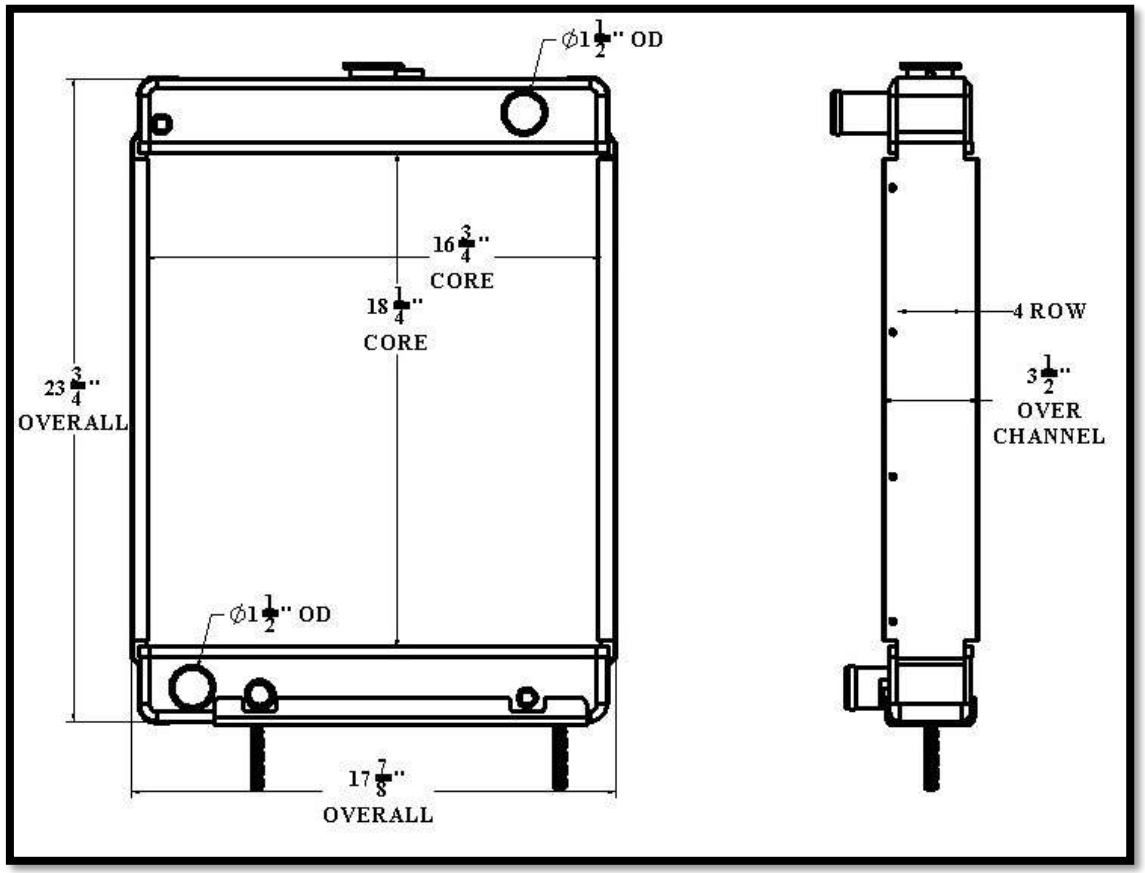

Overall Dimensions: 23-3/4” X 17-7/8” X 3-1/2”
Core: 18-1/4” X 16-3/4” X 4 ROW
Inlet: 1-1/2” OD
Outlet: 1-1/2” OD

ST333

Listed dimensions may vary slightly from OE

ST334

BGR Part Number: ST-0335-5I-EF

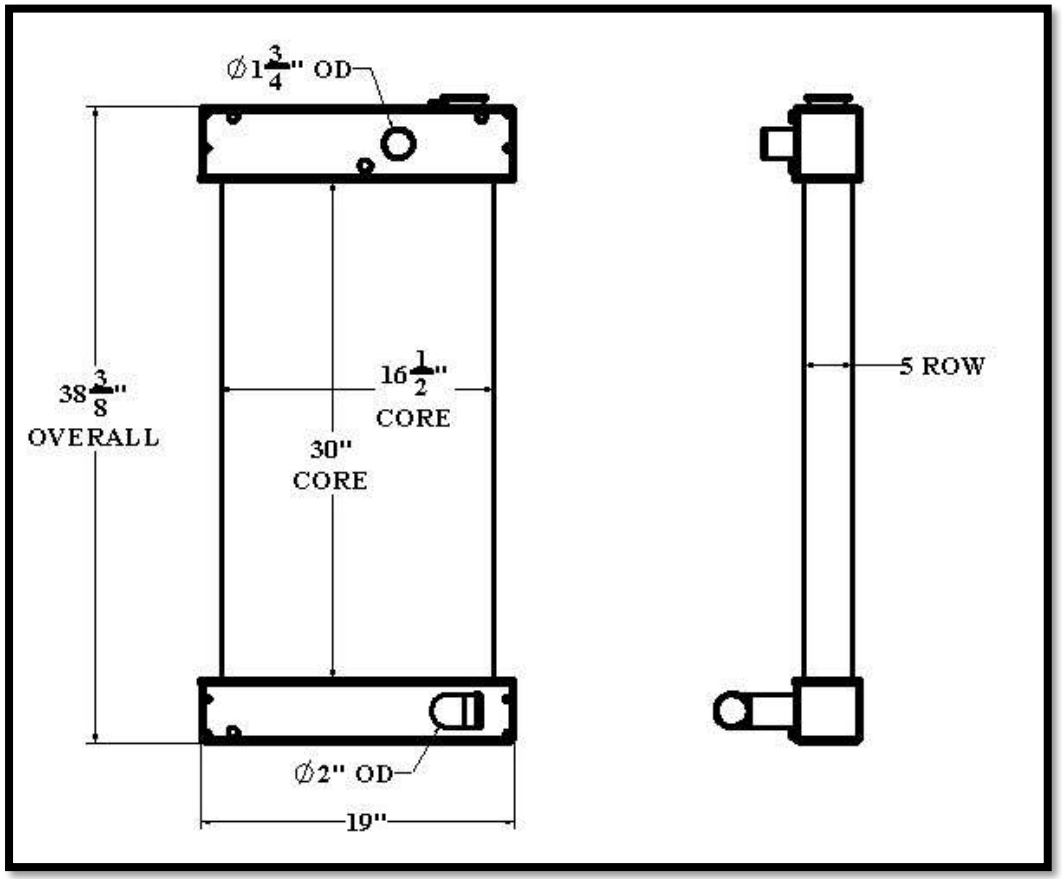

Overall Dimensions: 38-3/8” X 19” X 4”
Core:30” X 16-1/2” X 5 ROW
Inlet: 1-3/4” OD
Outlet: 2” OD

Tel 1.800.774.2168
www.bgrradiator.com

BGR Part Number: ST-0336-5I-F

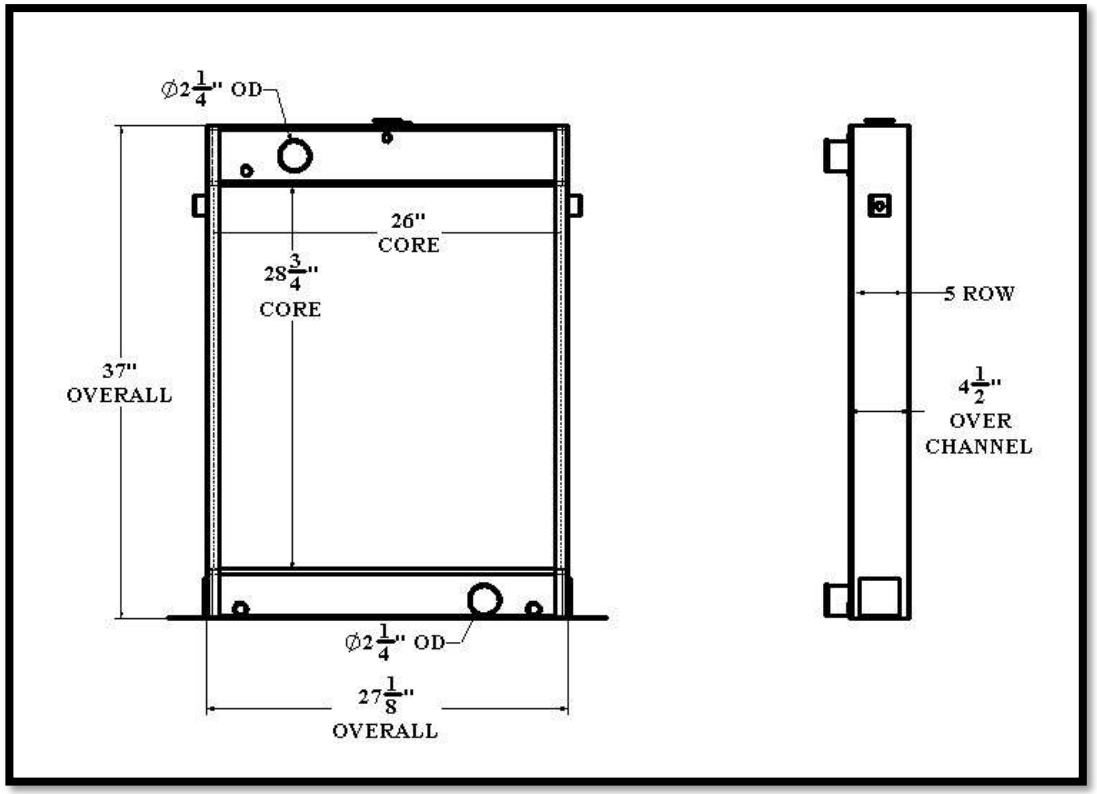

Overall Dimensions: 37” X 27-1/8” X 4-1/2”
Core: 28-3/4” X 26” X 5 ROW
Inlet: 2-1/4” OD
Outlet: 2-1/4” OD

ST335

Listed dimensions may vary slightly from OE

ST336

BGR Part Number: ST-0337-4I-EF
CAT 221-1714

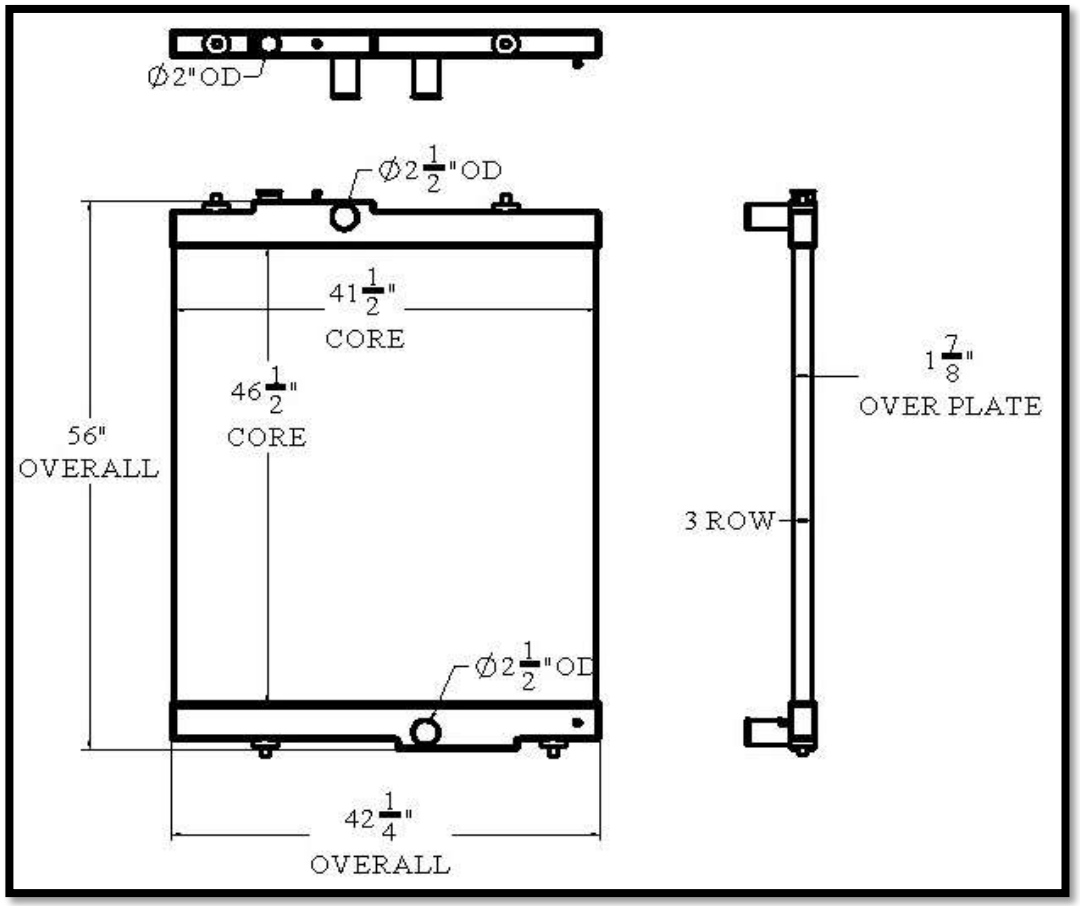

Overall Dimensions: 56” X 42-1/4” X 1-7/8”
Core: 46-1/2” X 41-1/2” X 3 ROW
Inlet: 2-1/2”OD, 2”OD
Outlet: 2-1/2”OD

Tel 1.800.774.2168
www.bgrradiator.com

BGR Part Number: ST-0338-5I-F
130-1760 REV A

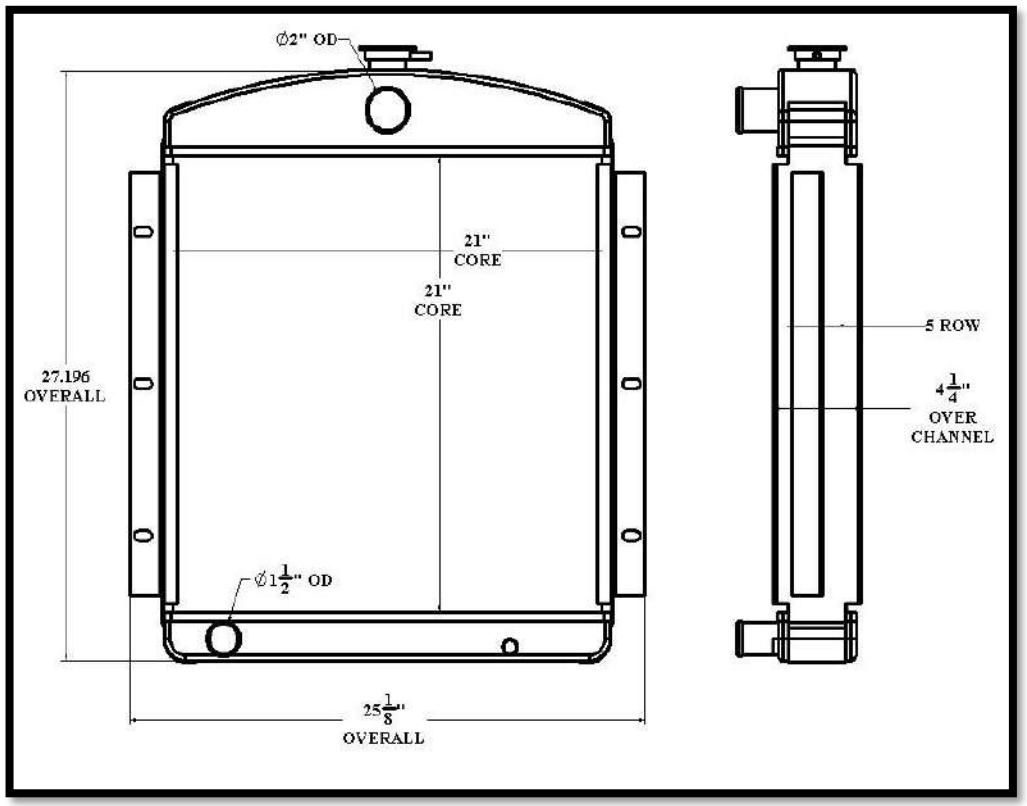

Overall Dimensions: 27.196” X 25-1/8” X 4-1/4”
Core: 21” X 21” X 5 ROW
Inlet: 2” OD
Outlet: 1-1/2” OD

Listed dimensions may vary slightly from OE

BGR Part Number: ST-0339-4M-NC
620000700036, 32001467, CS1900073

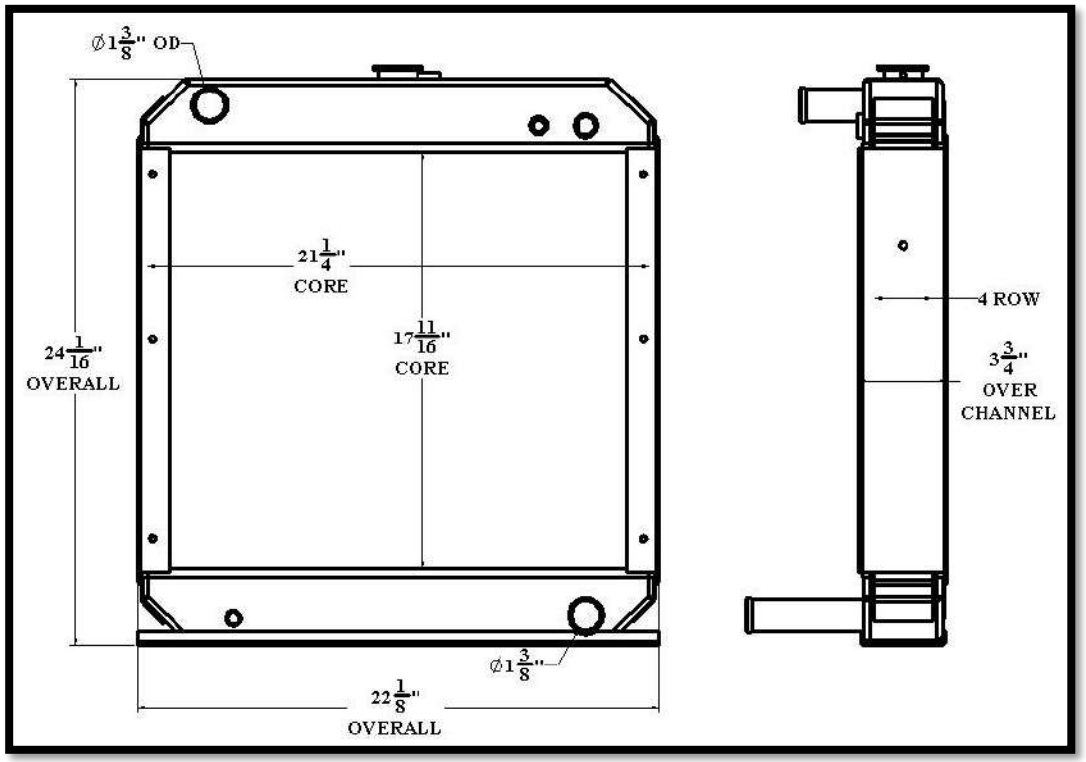

Overall Dimensions: 24-1/16” X 22-1/8” X 3-3/4”
Core: 21-1/4” X 17-11/16” X 4 ROW
Inlet: 1-3/8” OD
Outlet: 1-3/8” OD

Tel 1.800.774.2168
www.bgrradiator.com

BGR Part Number: ST-0340-7I-F

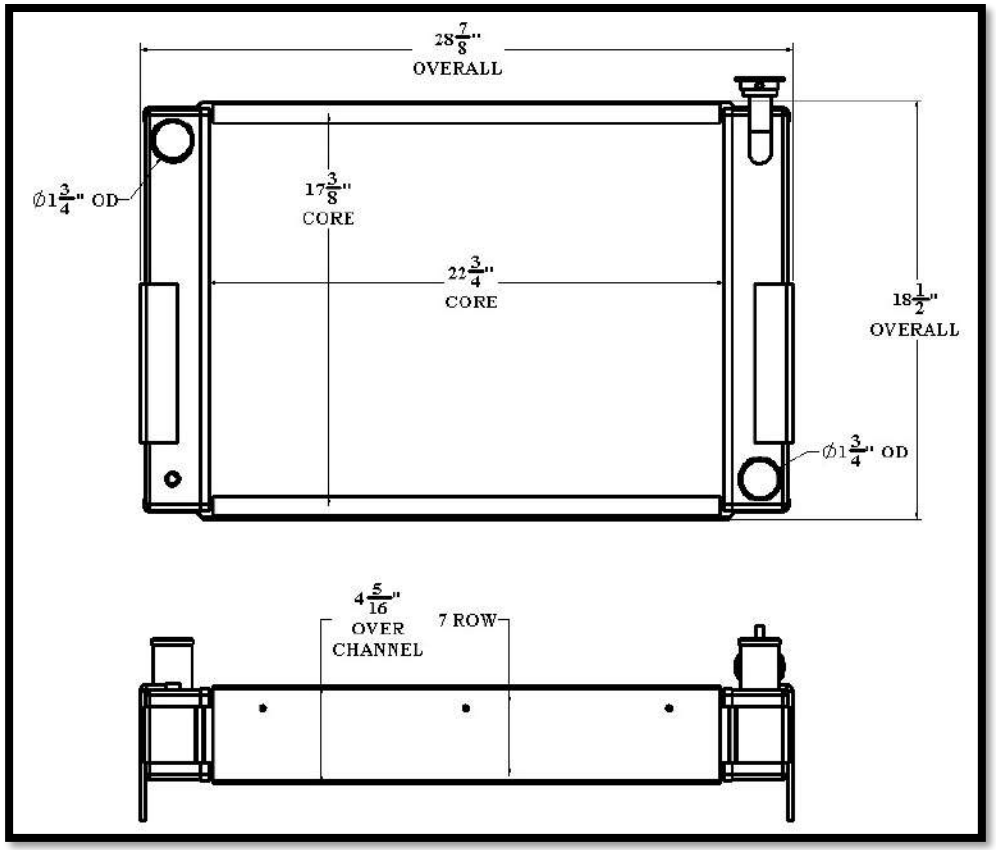

Overall Dimensions: 28-7/8” X 18-1/2” X 4-5/16”
Core: 22-3/4” X 17-3/8” X 7 ROW
Inlet: 1-3/4” OD
Outlet: 1-3/4” OD

ST339

Listed dimensions may vary slightly from OE

ST340

BGR Part Number: ST-0341-4I-NC

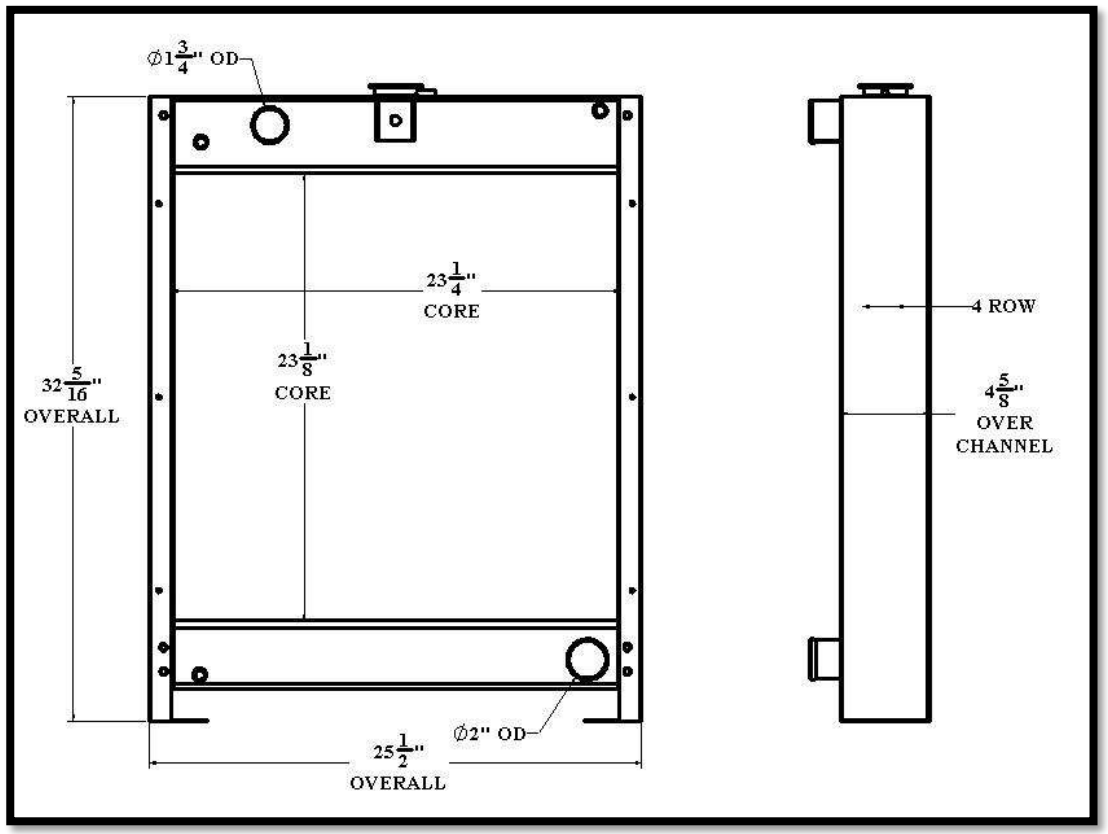

Overall Dimensions: 32-5/16” X 25-1/2” X 4-5/8”
Core: 23-1/8” X 23-1/4” X 4 ROW
Inlet: 1-3/4” OD
Outlet: 2” OD

Tel 1.800.774.2168
www.bgrradiator.com

BGR Part Number: ST-0342-4VT-EF

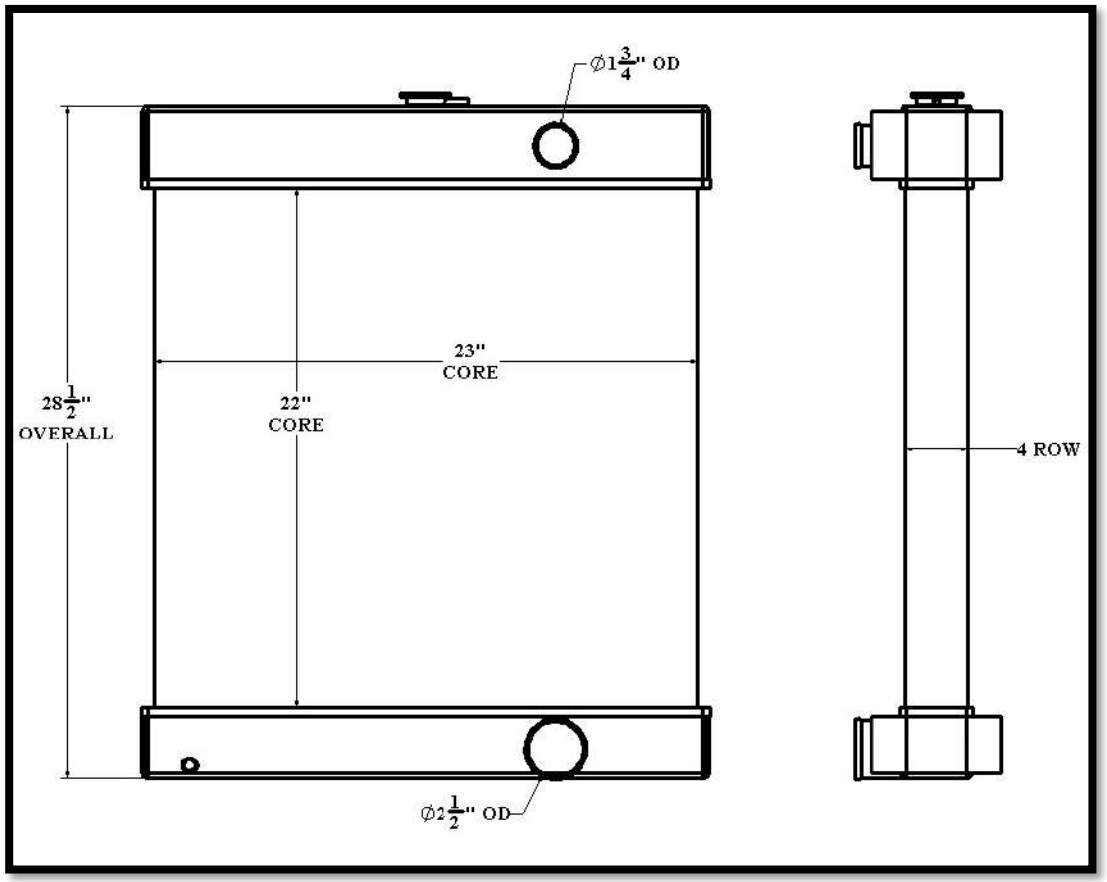

Overall Dimensions: 28-1/2” X 24” X 5-1/2”
Core: 22” X 23” X 4 ROW
Inlet: 1-3/4” OD
Outlet: 2-1/2” OD

ST341

Listed dimensions may vary slightly from OE

ST342

BGR Part Number: ST-0343-4I-F

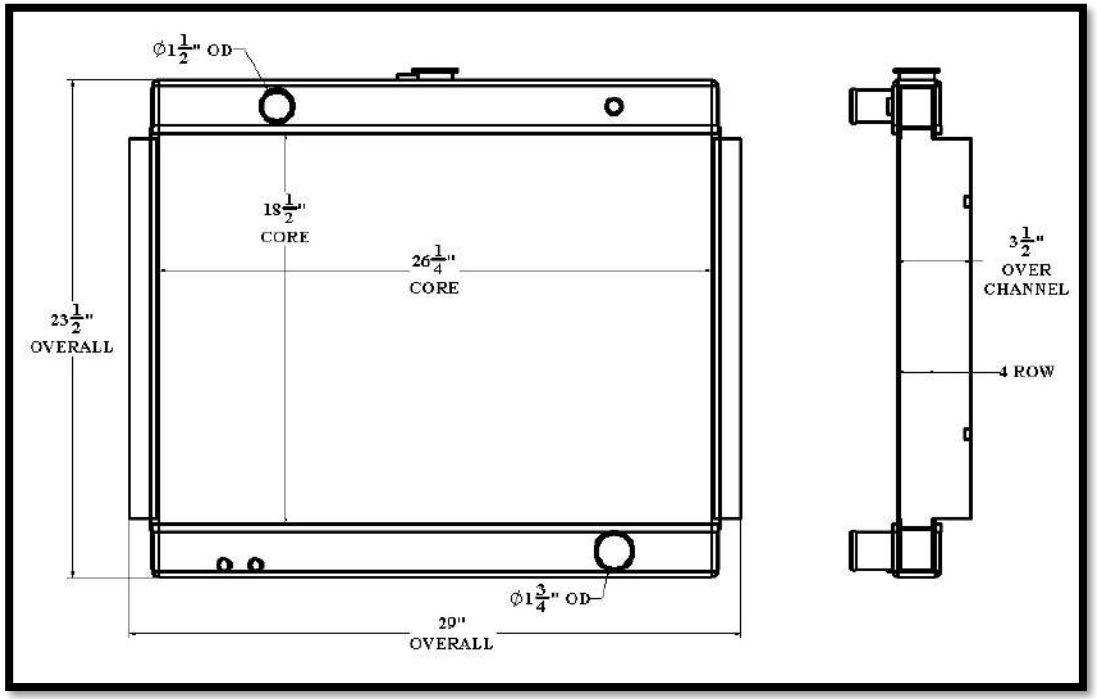

Overall Dimensions: 23-1/2” X 29” X 3-1/2”
Core: 18-1/2” X 26-1/4” X 4 ROW
Inlet: 1-1/2” OD
Outlet: 1-3/4” OD

Tel 1.800.774.2168
www.bgrradiator.com

BGR Part Number: ST-0344-7X-NC
01-00579 REV C

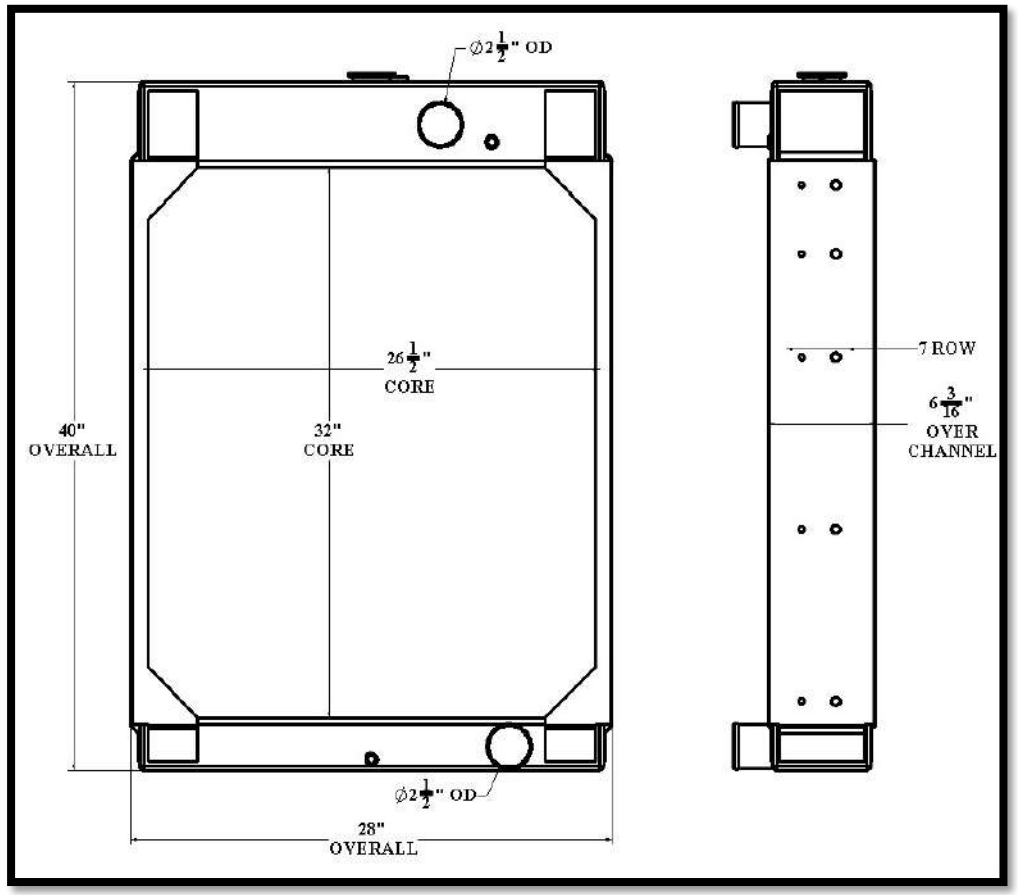

Overall Dimensions: 40” X 28” X 6-3/16”
Core: 32” X 26-1/2” X 7 ROW
Inlet: 2-1/2” OD
Outlet: 2-1/2” OD

Listed dimensions may vary slightly from OE

BGR Part Number: ST-0345-2VTW-NC

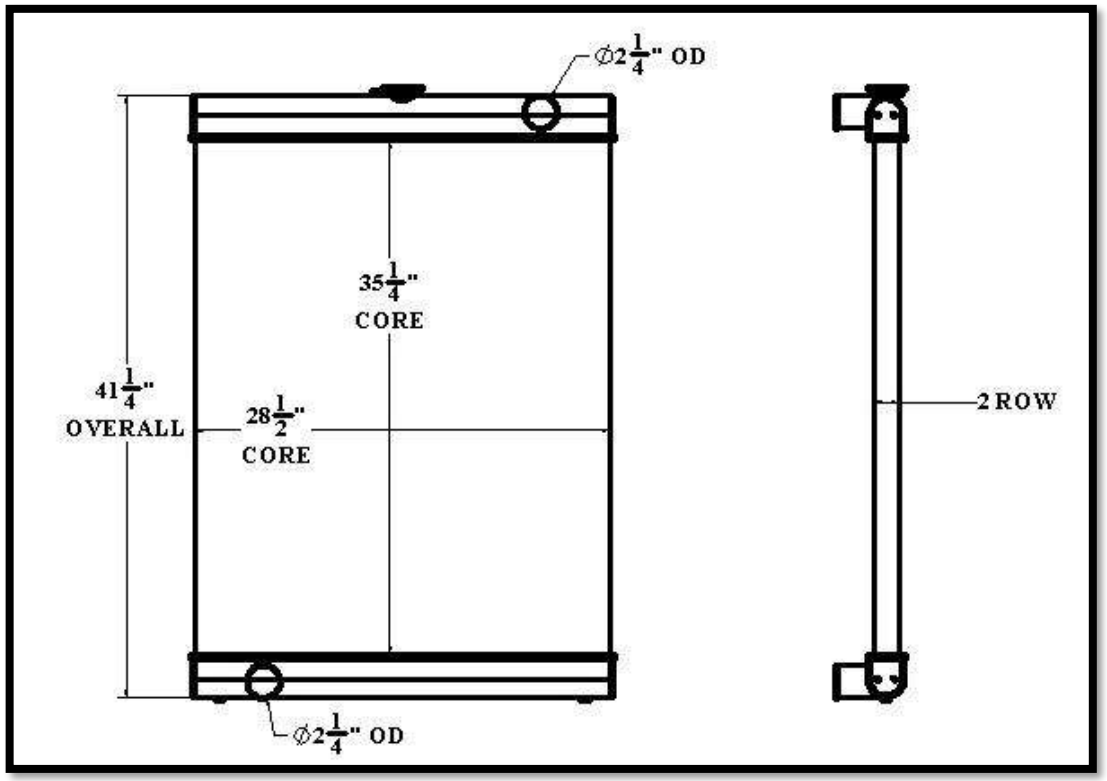

Overall Dimensions: 41-1/4” X 28-1/8”
Core: 35-1/4” X 28-1/2” X 2 ROW
Inlet: 2-1/4” OD
Outlet: 2-1/4” OD

Tel 1.800.774.2168
www.bgrradiator.com

BGR Part Number: ST-0346-7I-NC

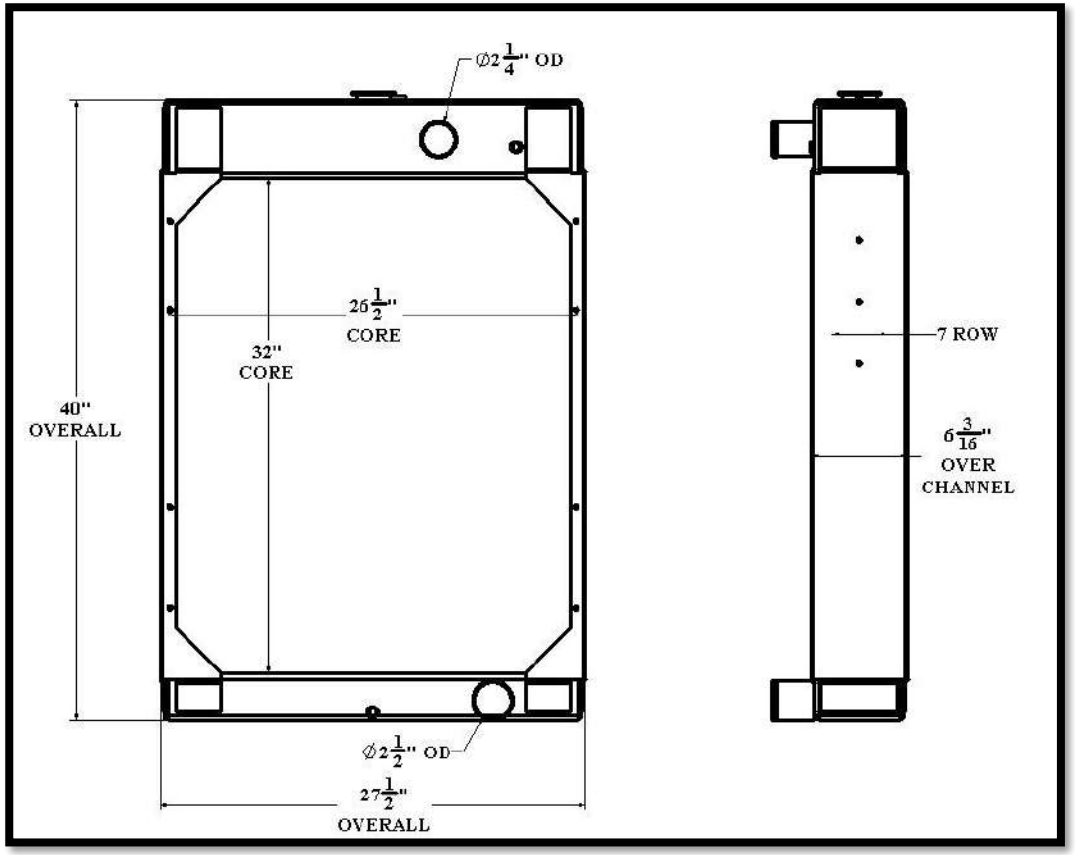

Overall Dimensions: 40” X 27-1/2” X 6-3/16”
Core: 32” X 26-1/2” X 7 ROW
Inlet: 2-1/4” OD
Outlet: 2-1/2” OD

Listed dimensions may vary slightly from OE

BGR Part Number: ST-0347-6I-F
0G1933

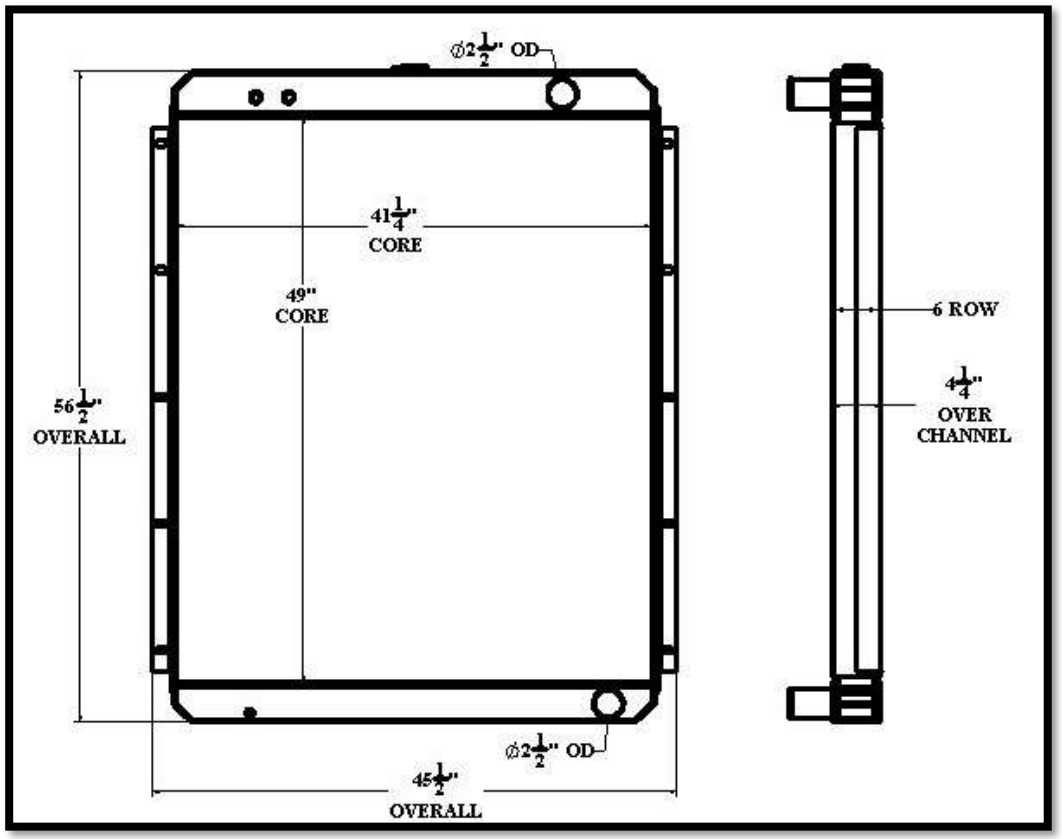

Overall Dimensions: 56-1/2” X 45-1/2” X 4-1/4”
Core: 49” X 41-1/4” X 6 ROW
Inlet: 2-1/2” OD
Outlet: 2-1/2” OD

Tel 1.800.774.2168
www.bgrradiator.com

BGR Part Number: ST-0348-4M-NC

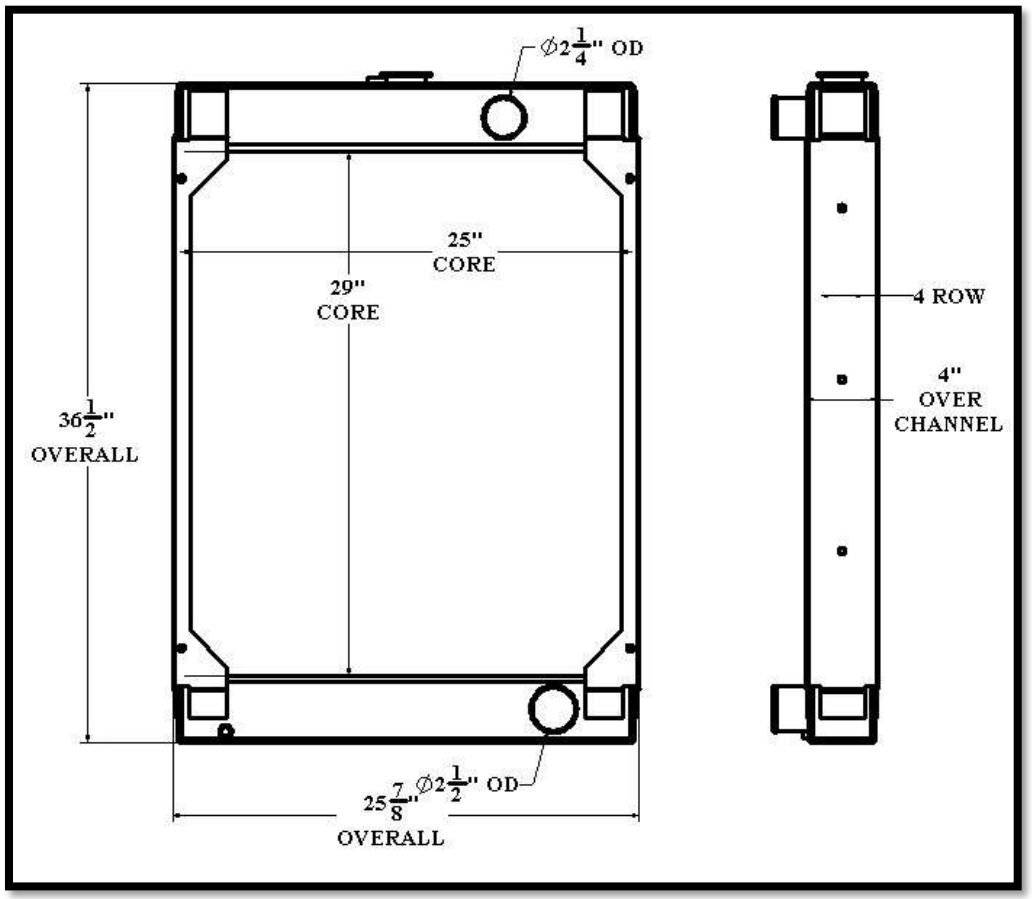

Overall Dimensions: 36-1/2” X 25-7/8” X 4”
Core: 29” X 25” X 4 ROW
Inlet: 2-1/4” OD
Outlet: 2-1/2” OD

Listed dimensions may vary slightly from OE

BGR Part Number: ST-0349-4I-NC
BALDOR ELECTRIC EA0006A86

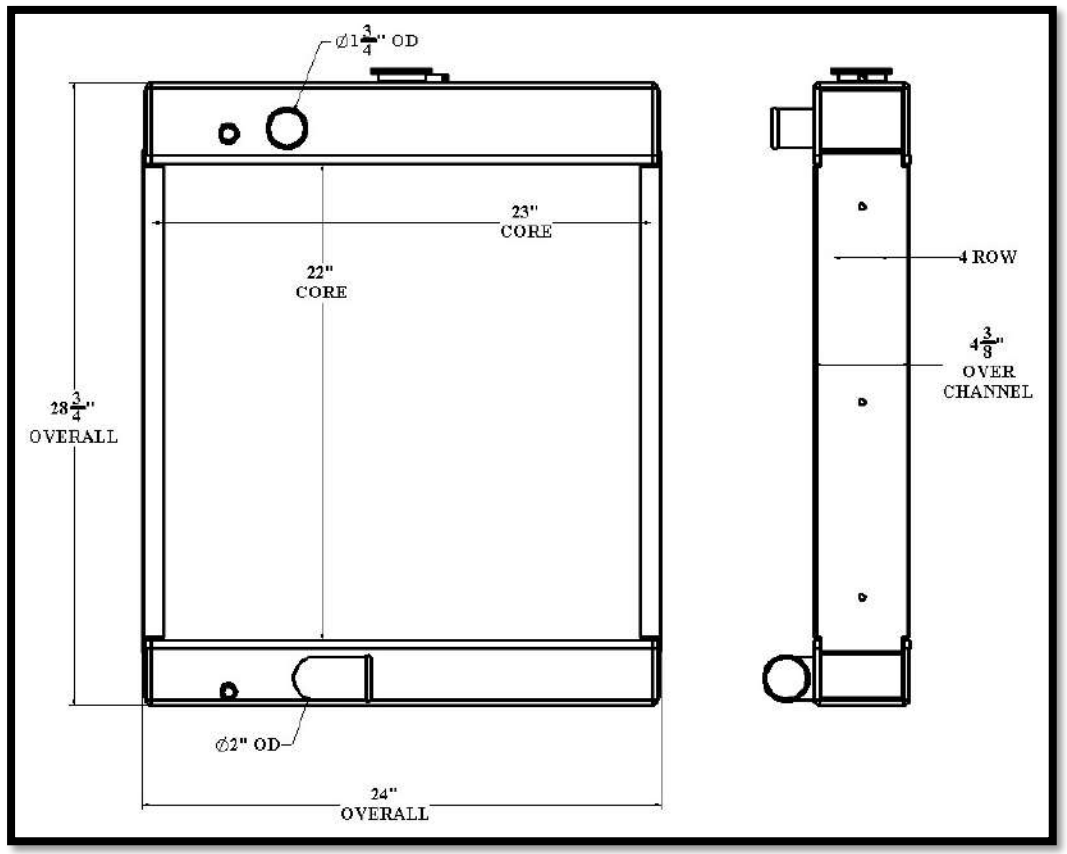

Overall Dimensions: 28-3/4” X 24” X 4-3/8”
Core: 22” X 23-1/8” X 4 ROW
Inlet: 1-3/4” OD
Outlet: 2” OD

Tel 1.800.774.2168
www.bgrradiator.com

BGR Part Number: ST-0350-7N-NC

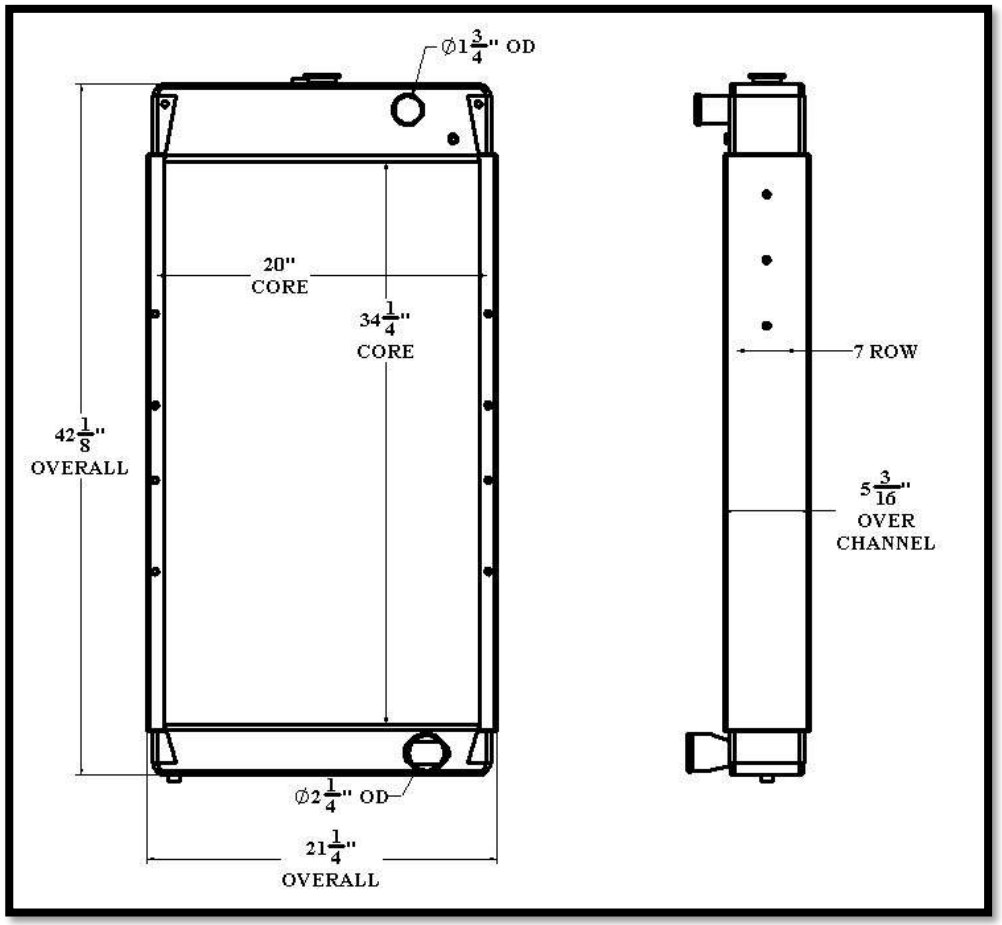

Overall Dimensions: 42-1/8” X 21-1/4” X 5-3/16”
Core: 34-1/4” X 20” X 7 ROW
Inlet: 1-3/4” OD
Outlet: 2-1/4” OD

ST349

Listed dimensions may vary slightly from OE

ST350

BGR Part Number: ST-0351-3VT-NC
KOHLER

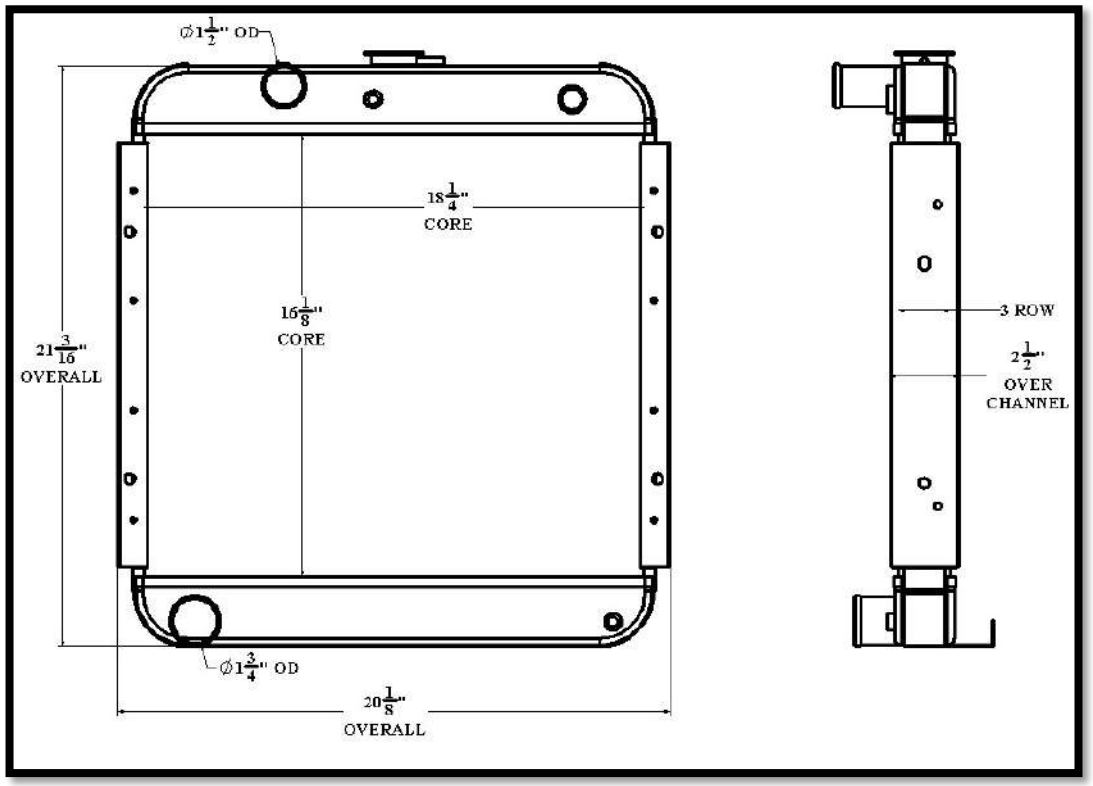

Overall Dimensions: 21-3/16” X 20-1/8” X 2-1/2”
Core: 16-1/8” X 18-1/4” X 3 ROW
Inlet: 1-1/2” OD
Outlet: 1-3/4” OD

Tel 1.800.774.2168
www.bgrradiator.com

BGR Part Number: ST-0352-4VTM-NC

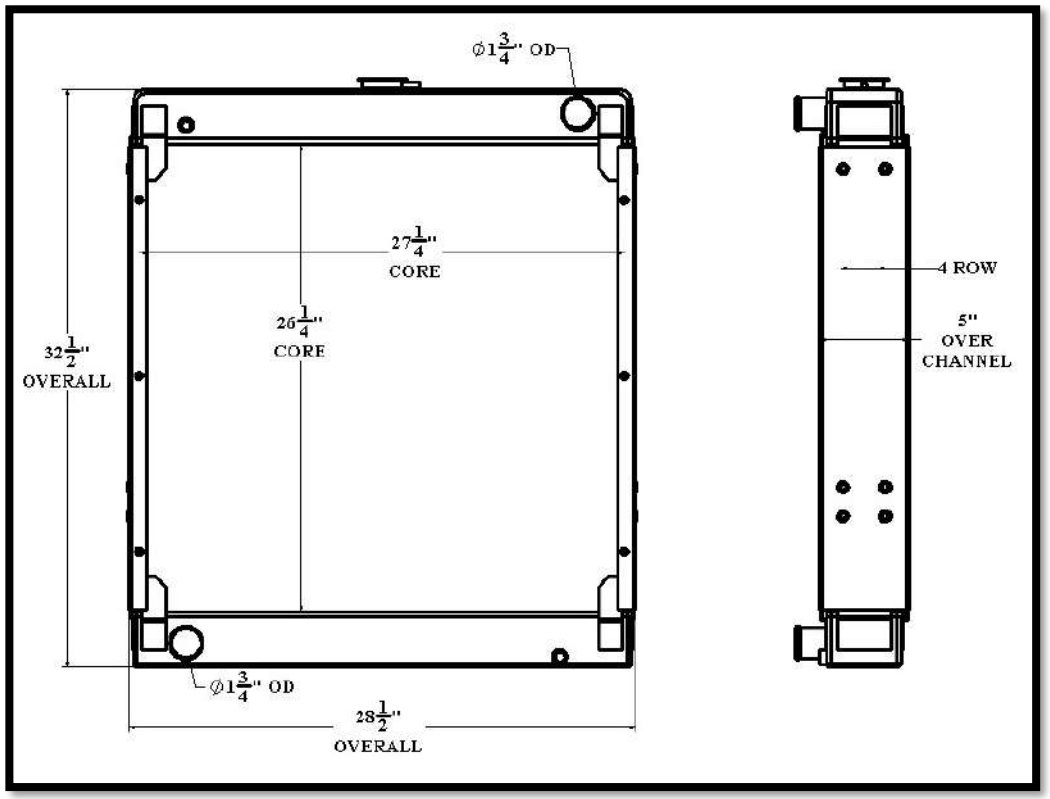

Overall Dimensions: 32-1/2” X 28-1/2” X 5”
Core: 26-1/4” X 27-1/4” X 4 ROW
Inlet: 1-3/4” OD
Outlet: 1-3/4” OD

Listed dimensions may vary slightly from OE

BGR Part Number: ST-0353-4VT-NC

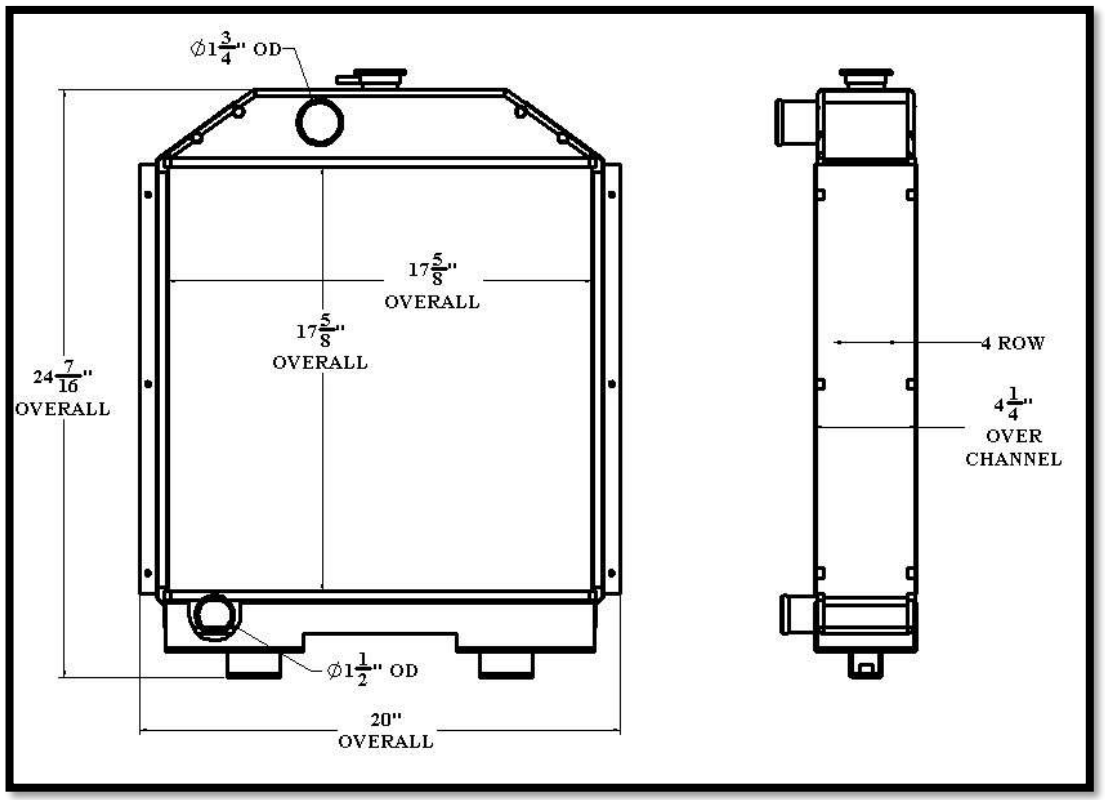

Overall Dimensions: 24-7/16” X 20” X 4-1/4”
Core: 17-5/8” X 17-5/8” X 4 ROW
Inlet: 1-3/4” OD
Outlet: 1-1/2” OD

Tel 1.800.774.2168
www.bgrradiator.com

BGR Part Number: ST-0354-6I-F

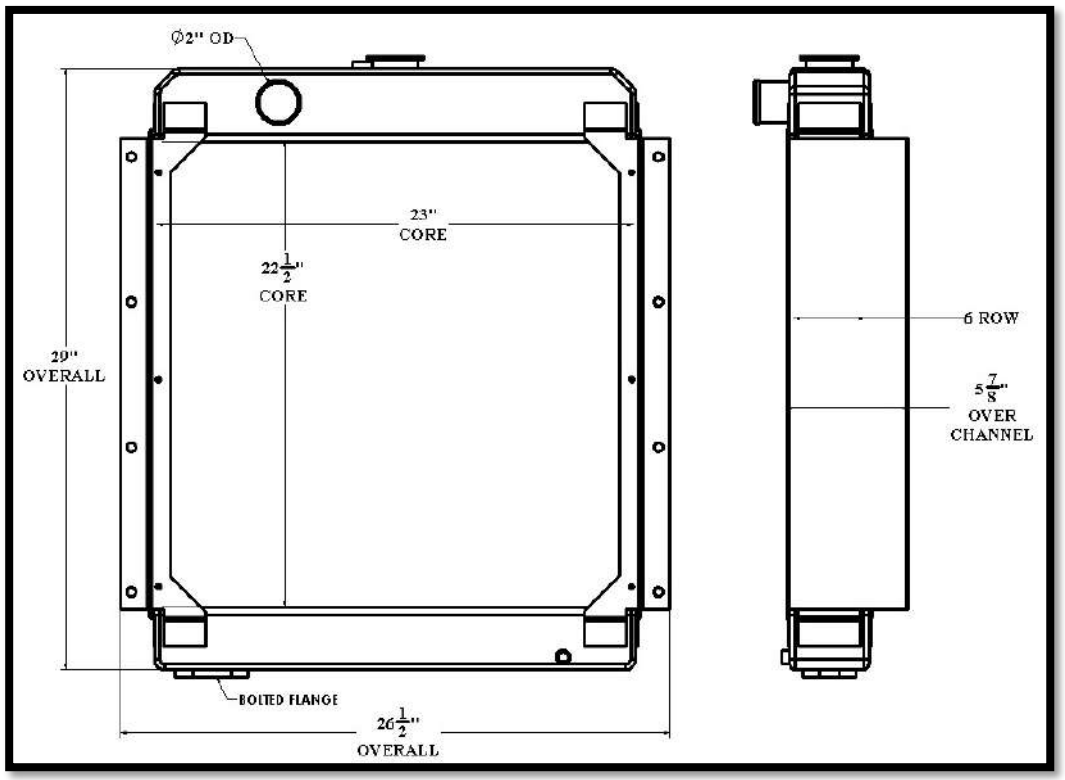

Overall Dimensions: 29” X 26-1/2” X 5-7/8”
Core: 22-1/2” X 23” X 6 ROW
Inlet: 2” OD
Outlet: BOLTED FLANGE

ST353

Listed dimensions may vary slightly from OE

ST354

BGR Part Number: ST-0355-5I-F

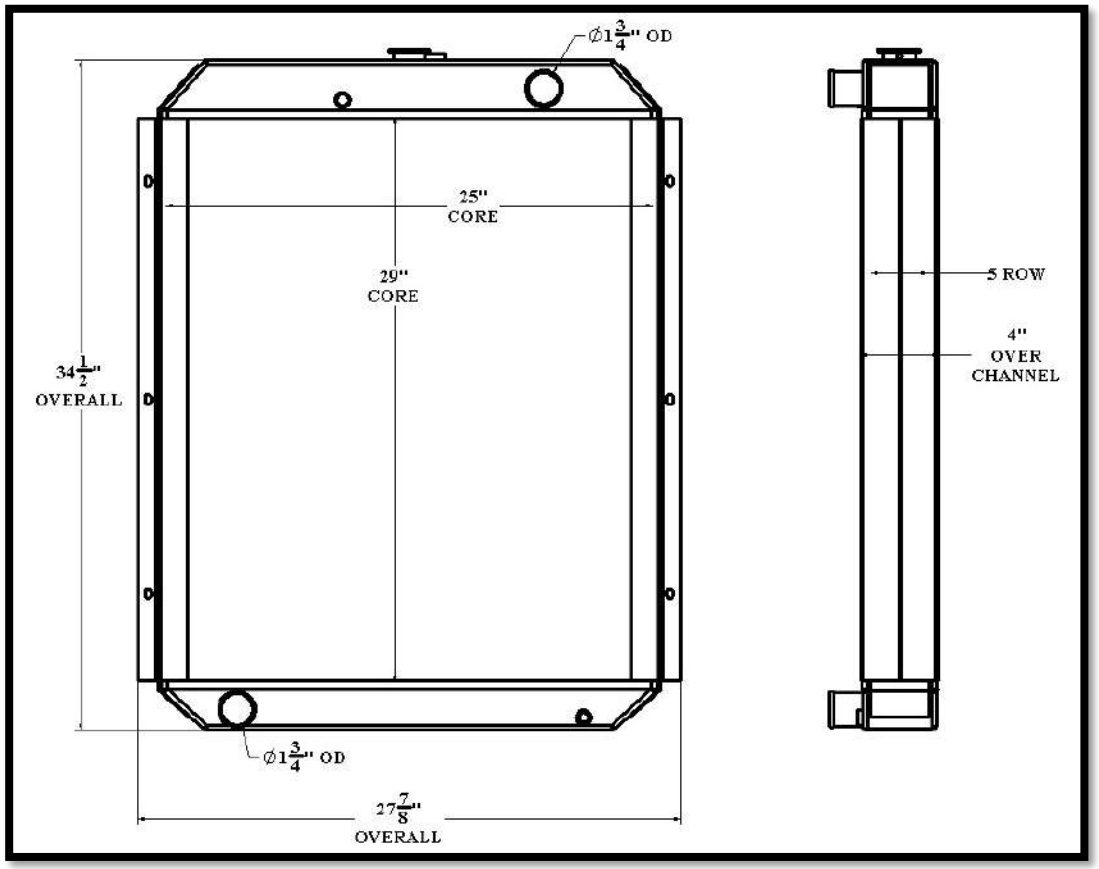

Overall Dimensions: 34-1/2” X 27-7/8” X 4”
Core: 29” X 25” X 5 ROW
Inlet: 1-3/4” OD
Outlet: 1-3/4” OD

Tel 1.800.774.2168
www.bgrradiator.com

BGR Part Number: ST-0356-6I-NC

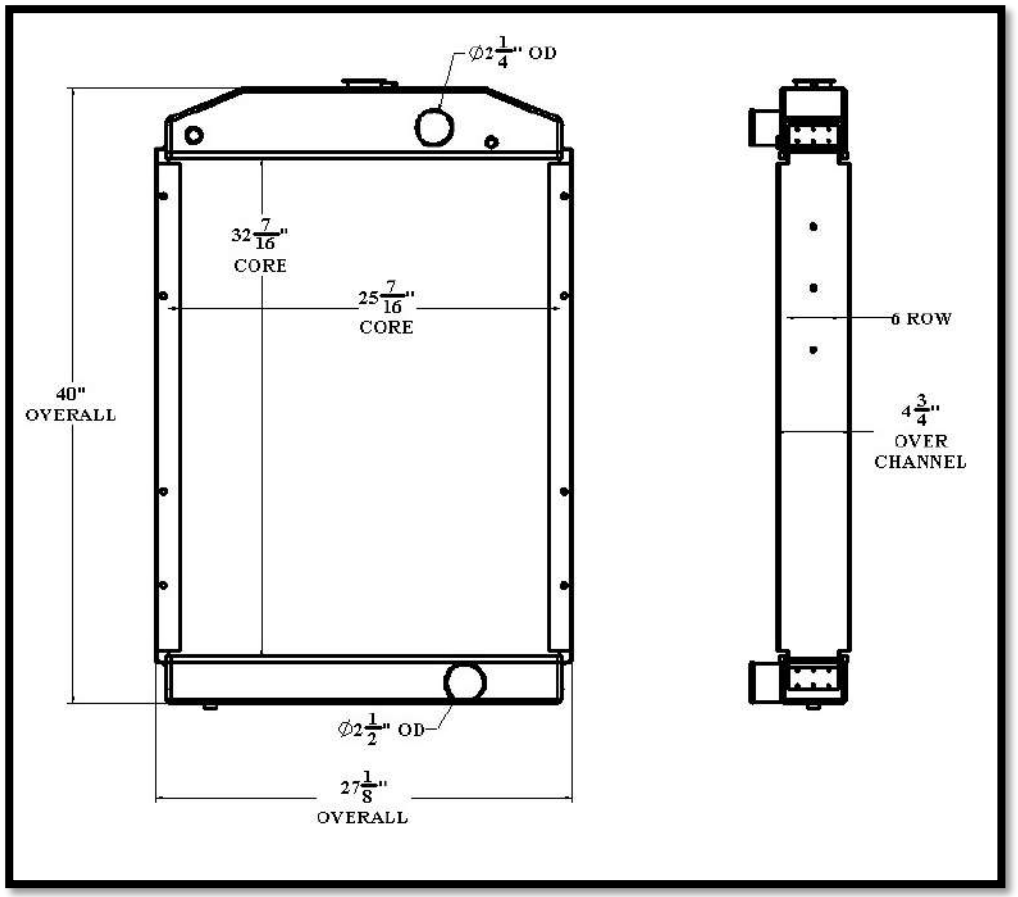

Overall Dimensions: 40” X 27-1/8” X 4-3/4”
Core: 32-7/16” X 25-7/16” X 6 ROW
Inlet: 2-1/4” OD
Outlet: 2-1/2” OD

ST355

Listed dimensions may vary slightly from OE

ST356

BGR Part Number: ST-0357-4I-F
427 BIG BLOCK

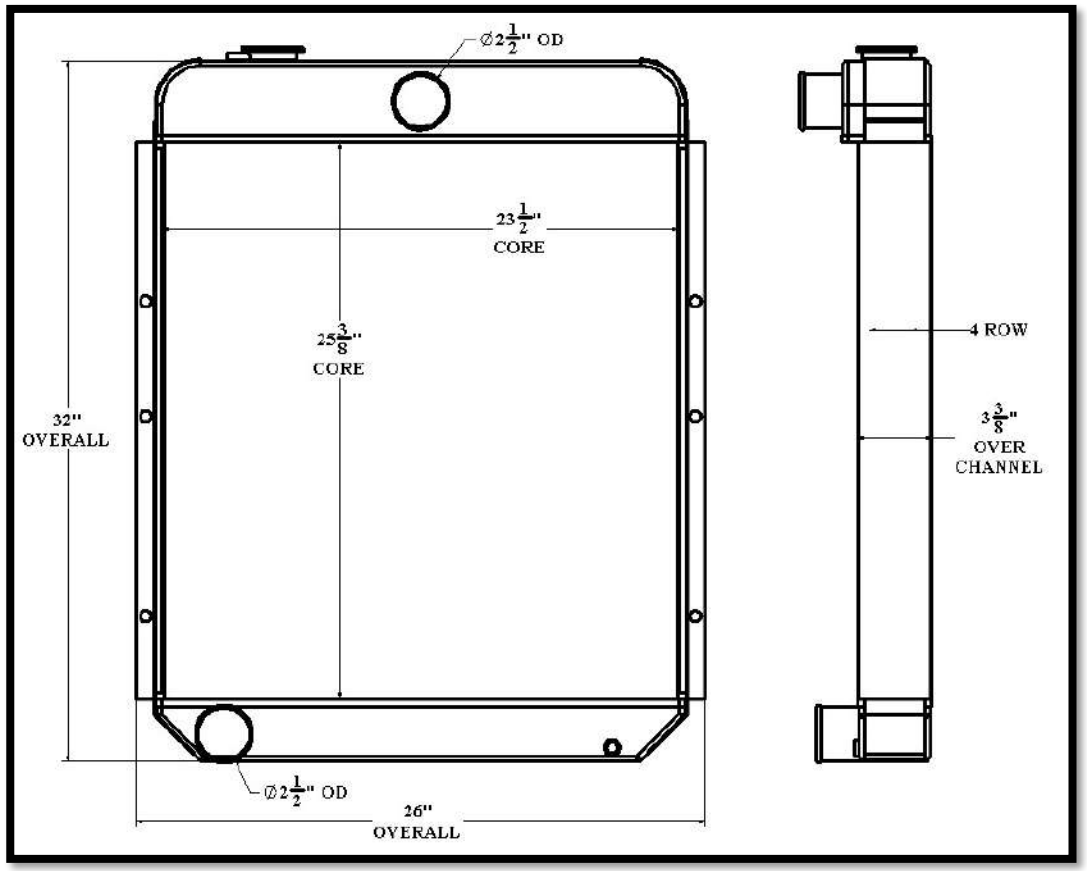

Overall Dimensions: 32” X 26” X 3-3/8”
Core: 25-3/8” X 23-1/2” X 4 ROW
Inlet: 2-1/2” OD
Outlet: 2-1/2” OD

Tel 1.800.774.2168
www.bgrradiator.com

BGR Part Number: ST-0358-2VTU-NC

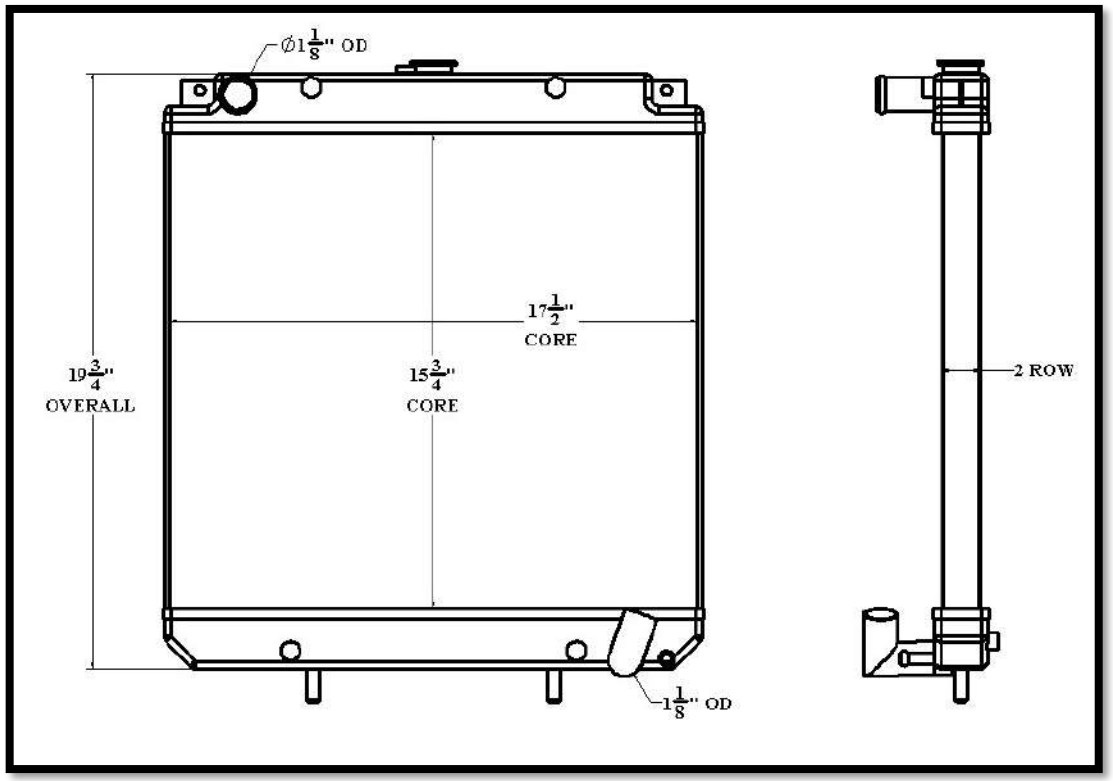

Overall Dimensions: 19-3/4” X 17-1/2”
Core: 15-3/4” X 17-1/2” X 2 ROW
Inlet: 1-1/8” OD
Outlet: 1-1/8” OD

ST357

Listed dimensions may vary slightly from OE

ST358

BGR Part Number: ST-0359-4VT-NC

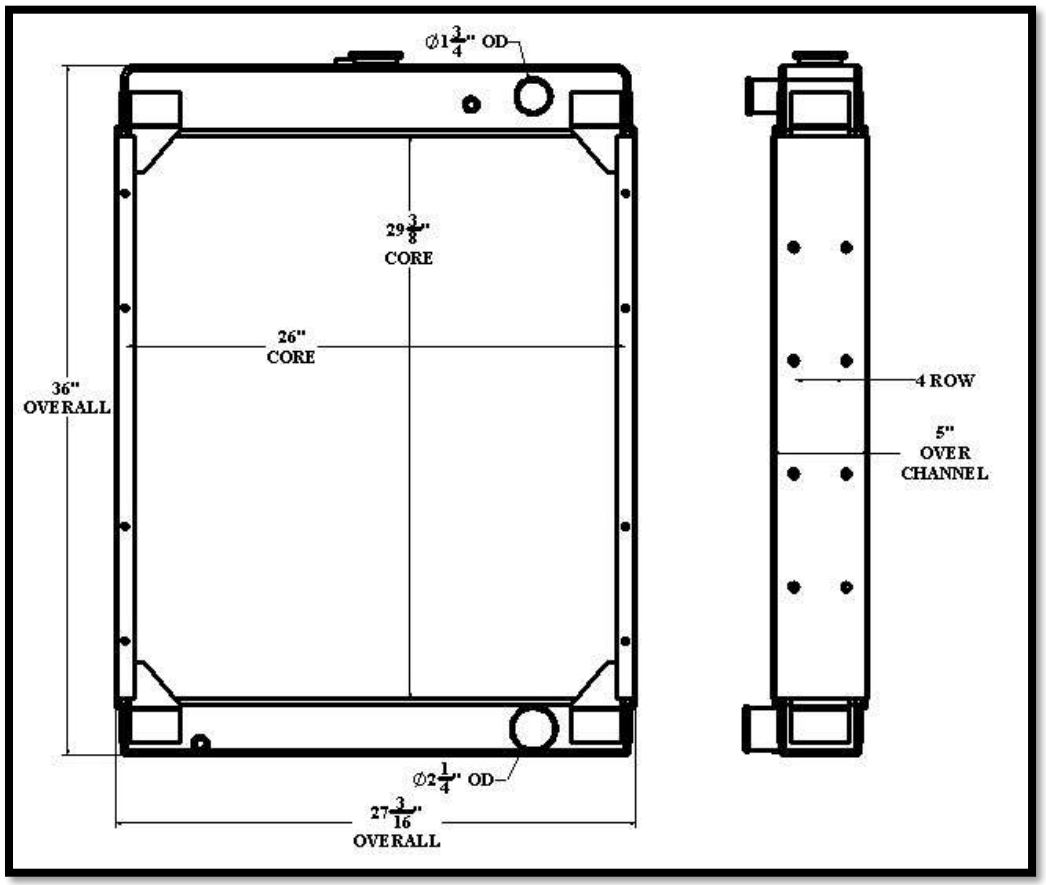

Overall Dimensions: 36” X 27-3/16” X 5”
Core: 29-3/8” X 26” X 4 ROW
Inlet: 1-3/4” OD
Outlet: 2-1/4” OD

Tel 1.800.774.2168
www.bgrradiator.com

BGR Part Number: ST-0360-3VT-NC

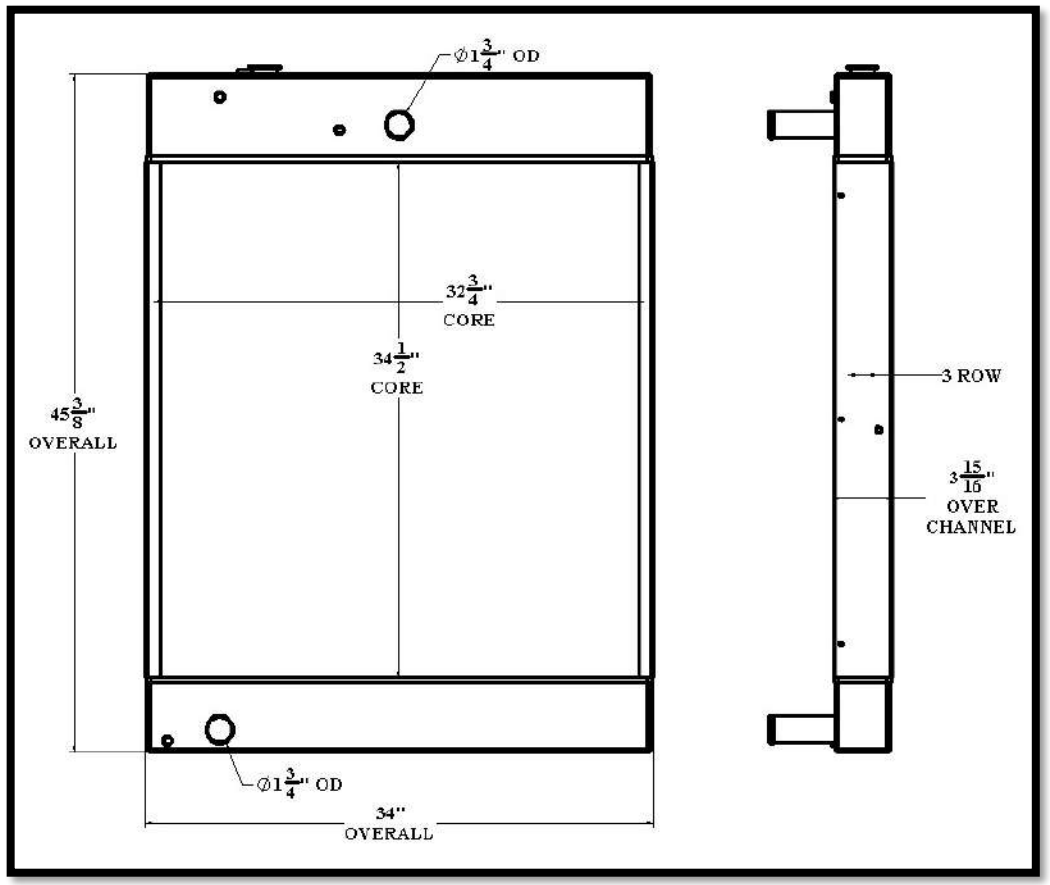

Overall Dimensions: 45-3/8” X 34” X 3-15/16”
Core: 34-1/2” X 32-3/4” X 3 ROW
Inlet: 1-3/4” OD
Outlet: 1-3/4” OD

ST359

Listed dimensions may vary slightly from OE

ST360

BGR Part Number: ST-0361-2VTU-NC
KOHLER A-276185

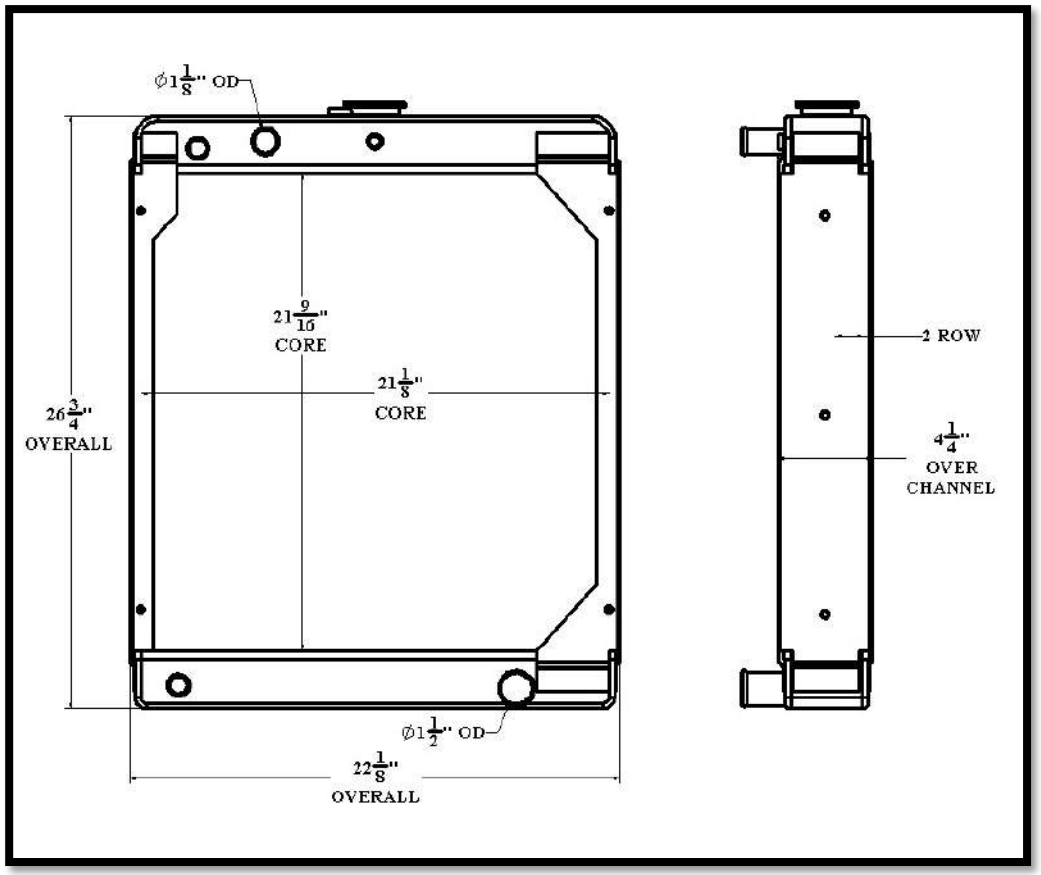

Overall Dimensions: 26-3/4” X 22-1/8” X 4-1/4”
Core: 21-9/16” X 21-1/8” X 2 ROW
Inlet: 1-1/8” OD
Outlet: 1-1/2” OD

Tel 1.800.774.2168
www.bgrradiator.com

BGR Part Number: ST-0362-3I-NC

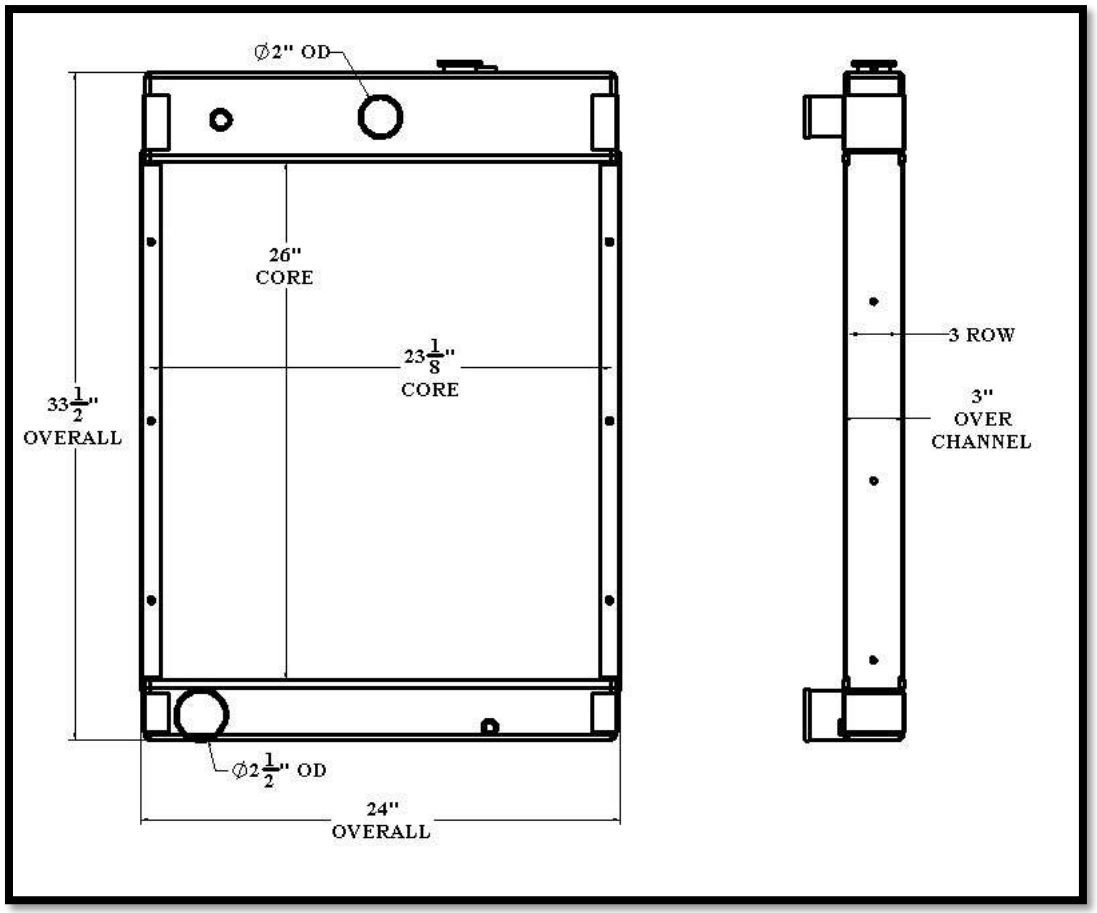

Overall Dimensions: 33-1/2” X 24” X 3”
Core: 26” X 23-1/8” X 3 ROW
Inlet: 2” OD
Outlet: 2-1/2” OD

ST361

Listed dimensions may vary slightly from OE

ST362

BGR Part Number: ST-0363-8I-NC

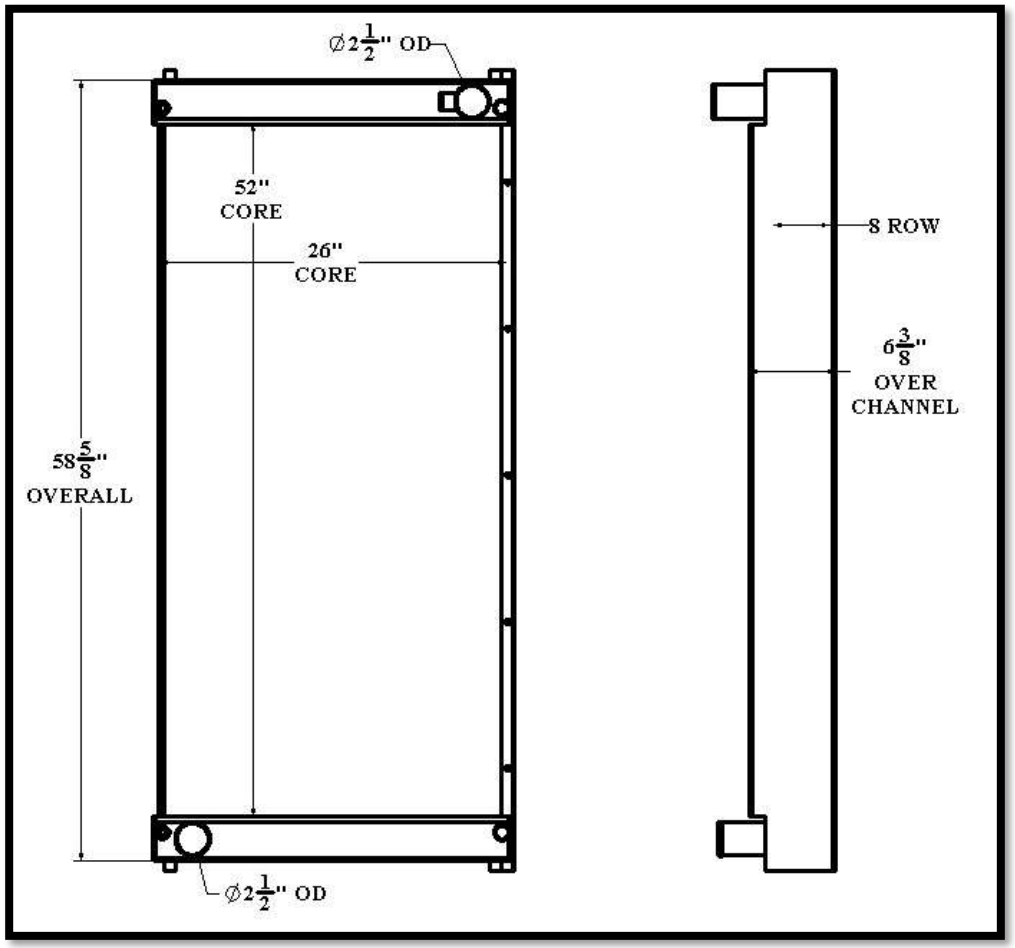

Overall Dimensions: 58-5/8” X 26” X 6-3/8”
Core: 52” X 26” X 8 ROW
Inlet: 2-1/2” OD
Outlet: 2-1/2” OD

Tel 1.800.774.2168
www.bgrradiator.com

BGR Part Number: ST-0364-6I-NC
KATOLIGHT BM11795

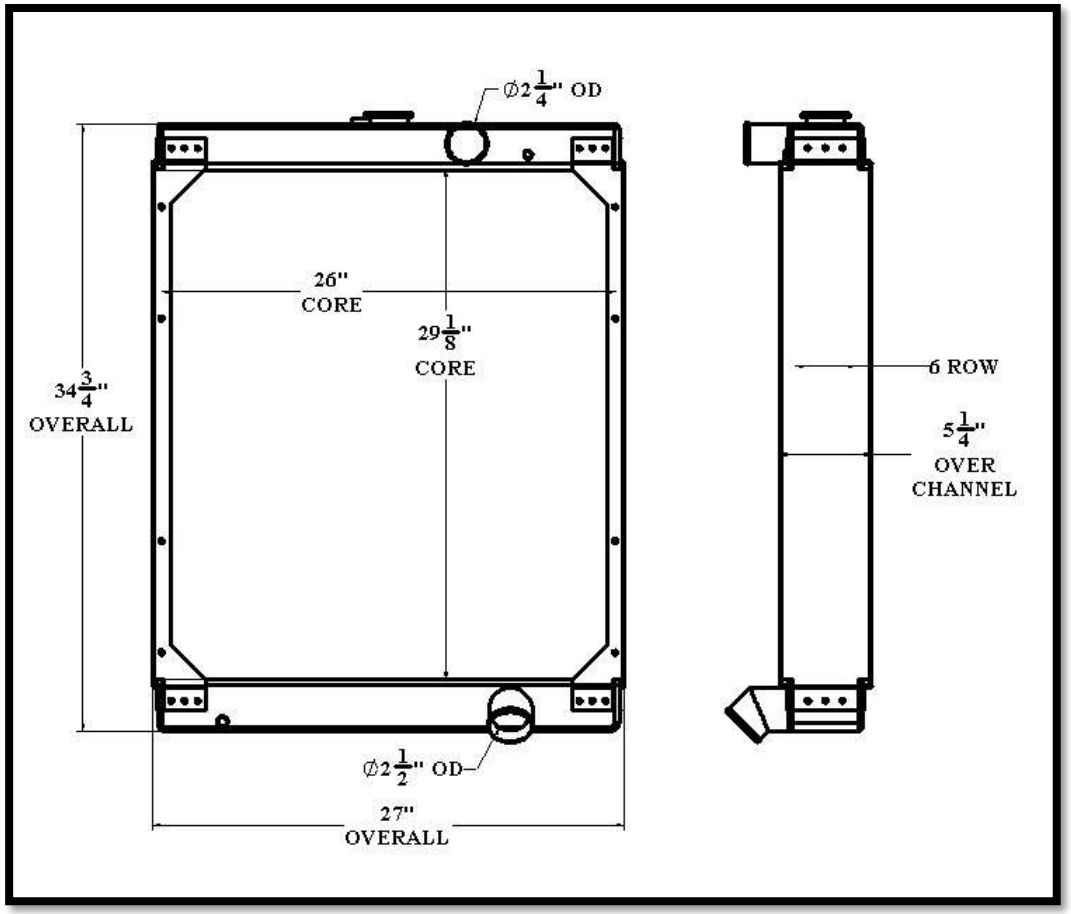

Overall Dimensions: 34-3/4” X 27” X 5-1/4”
Core: 29-1/2” X 26” X 6 ROW
Inlet: 2-1/4” OD
Outlet: 2-1/2” OD

ST363

Listed dimensions may vary slightly from OE

ST364

BGR Part Number: ST-0365-4I-B

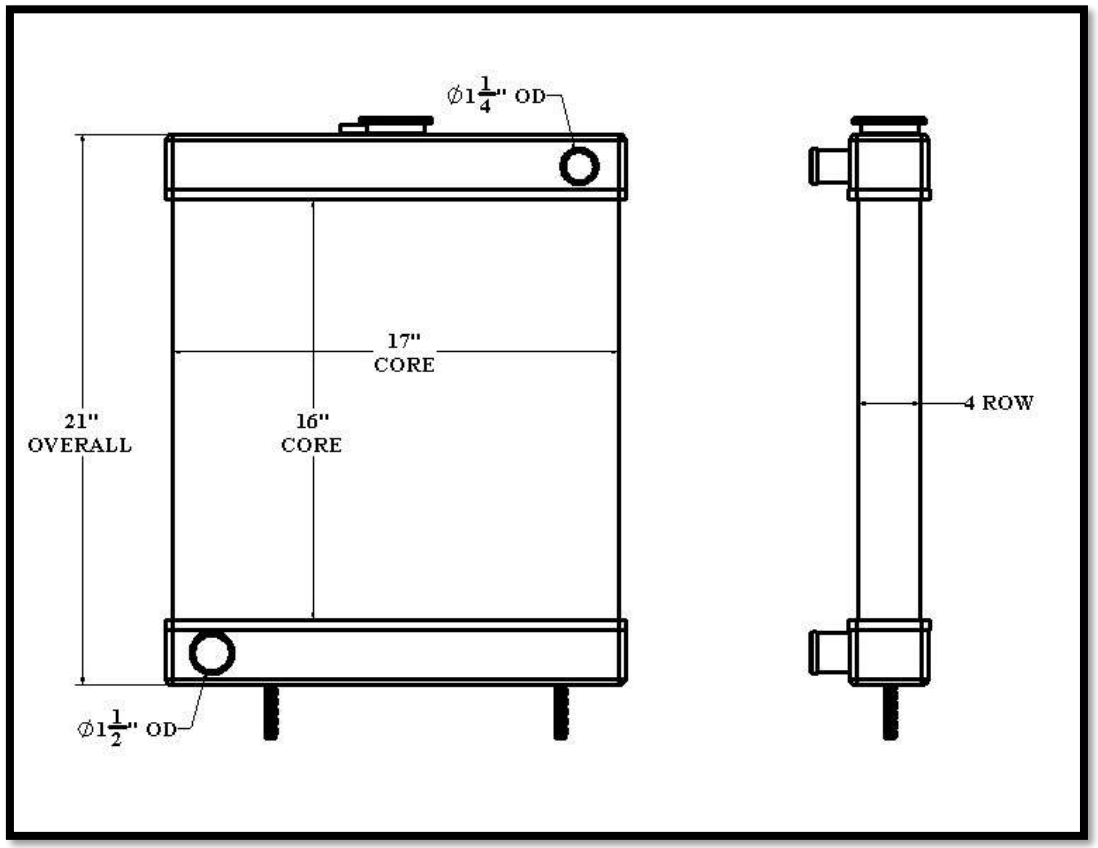

Overall Dimensions: 21” X 17”
Core: 16” X 17” X 4 ROW
Inlet: 1-1/4” OD
Outlet: 1-1/2” OD

Tel 1.800.774.2168
www.bgrradiator.com

BGR Part Number: ST-0366-5I-NC
MTU PART# SUA121159

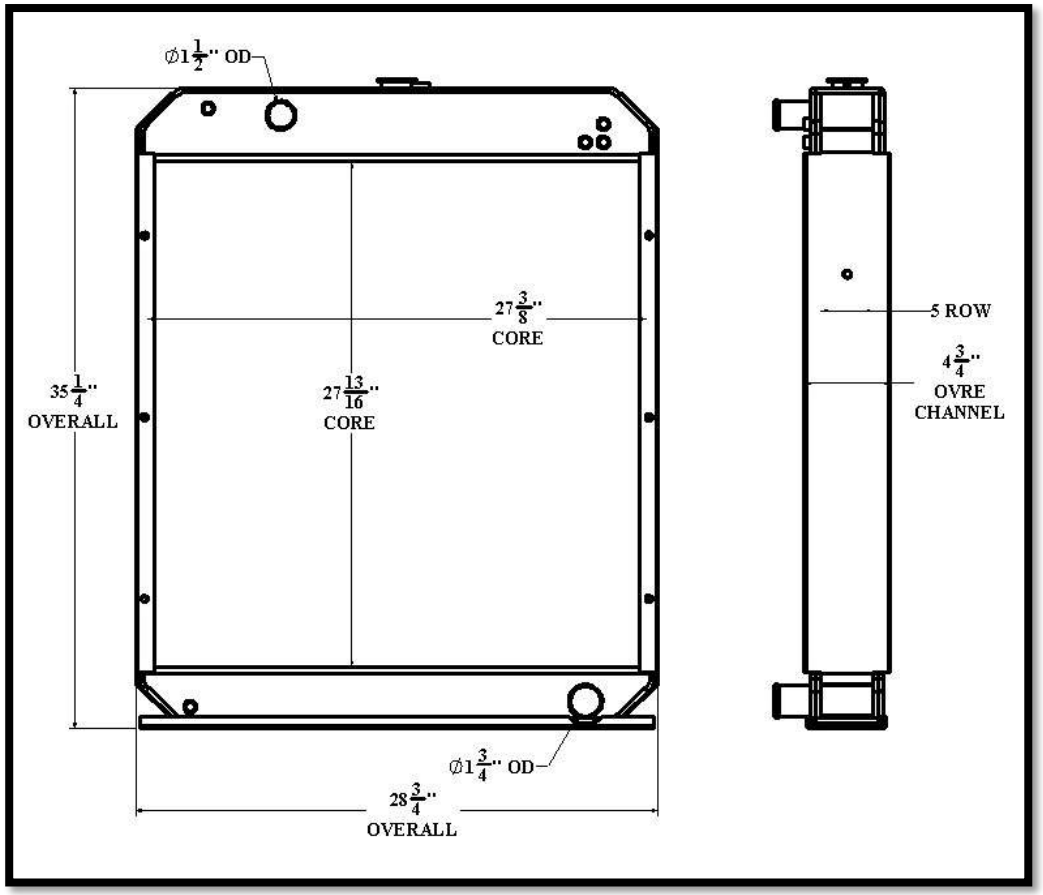

Overall Dimensions: 35-1/4” X 28-3/4” X 4-3/4”
Core: 27-13/16” X 27-3/8” X 5 ROW
Inlet: 1-1/2” OD
Outlet: 1-3/4” OD

ST365

Listed dimensions may vary slightly from OE

ST366

BGR Part Number: ST-0367-4I-F

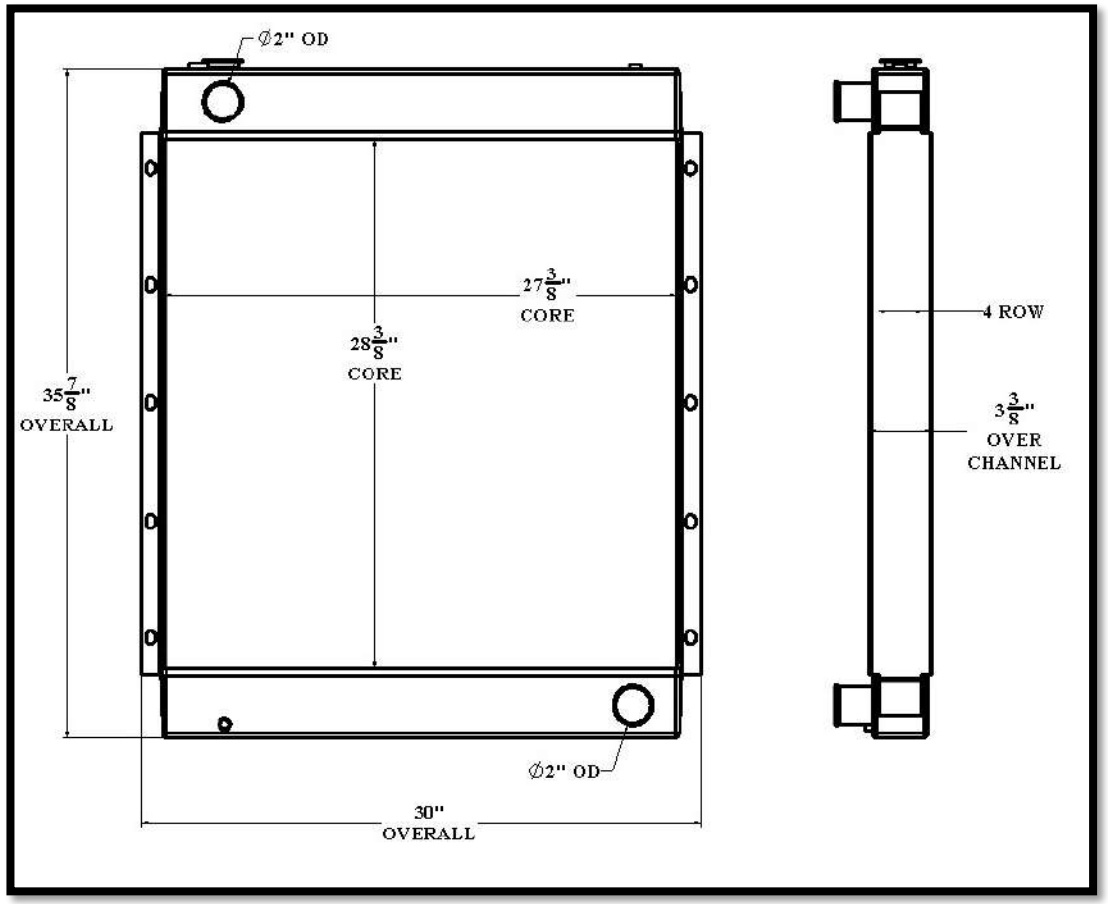

Overall Dimensions: 35-7/8” X 30” X 3-3/8”
Core: 28-3/8” X 27-3/8” X 4 ROW
Inlet: 2” OD
Outlet: 2” OD

Tel 1.800.774.2168
www.bgrradiator.com

BGR Part Number: ST-0368-8I-NC

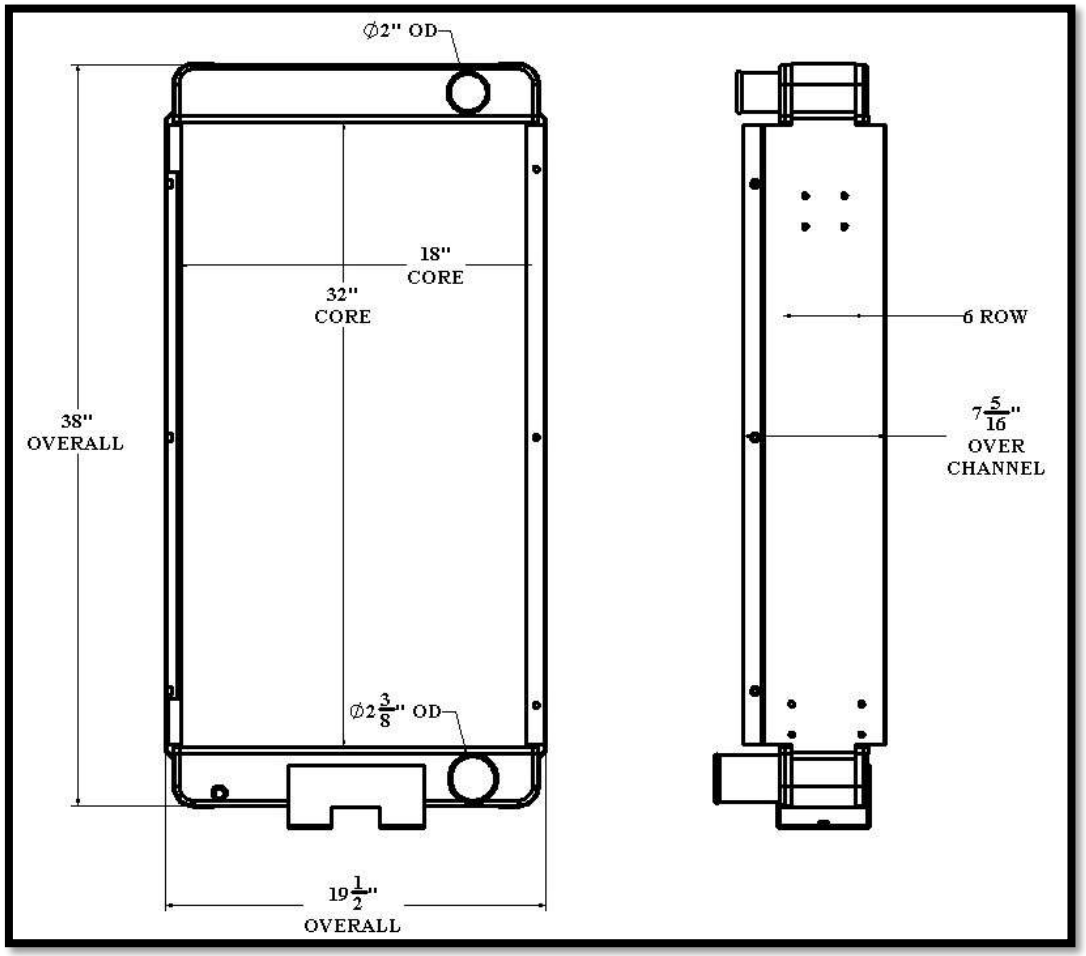

Overall Dimensions: 38” X 19-1/2” X 7-5/16”
Core: 32” X 18” X 6 ROW
Inlet: 2” OD
Outlet: 2-3/8” OD

ST367

Listed dimensions may vary slightly from OE

ST368

BGR Part Number: ST-0369-8N-EF
287-3889

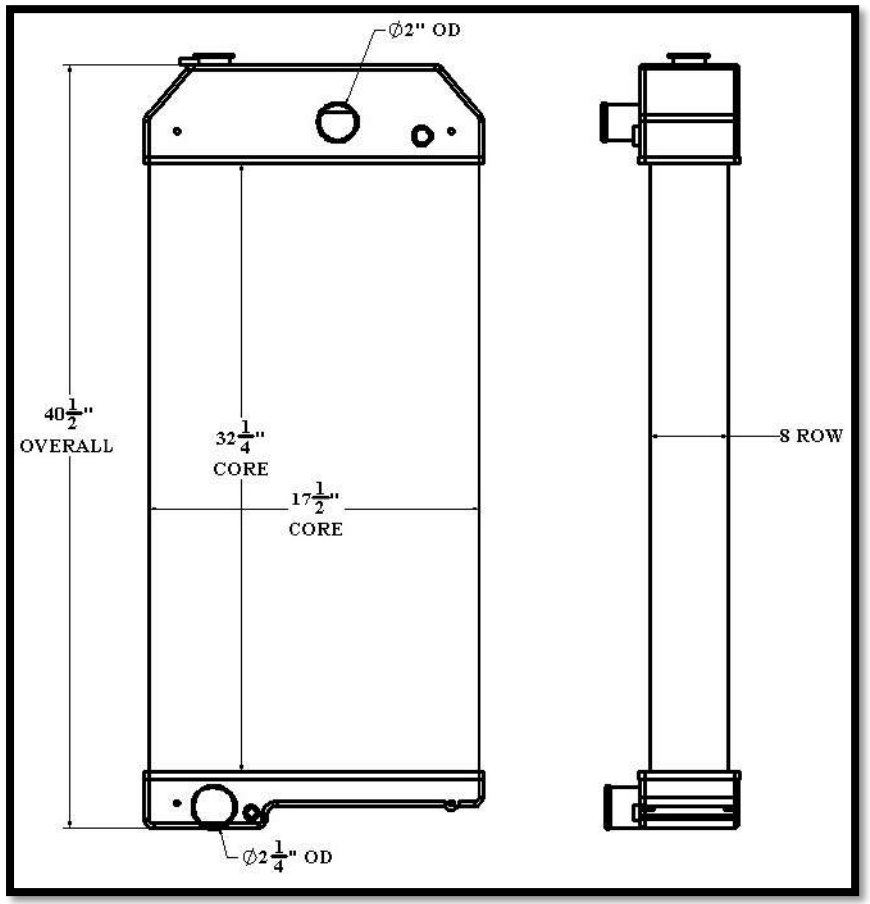

Overall Dimensions: 40-1/2” X 17-1/2”
Core: 32-1/4” X 17-1/2” X 8 ROW
Inlet: 2” OD
Outlet: 2-1/4” OD

Tel 1.800.774.2168
www.bgrradiator.com

BGR Part Number: ST-0370-5I-NC

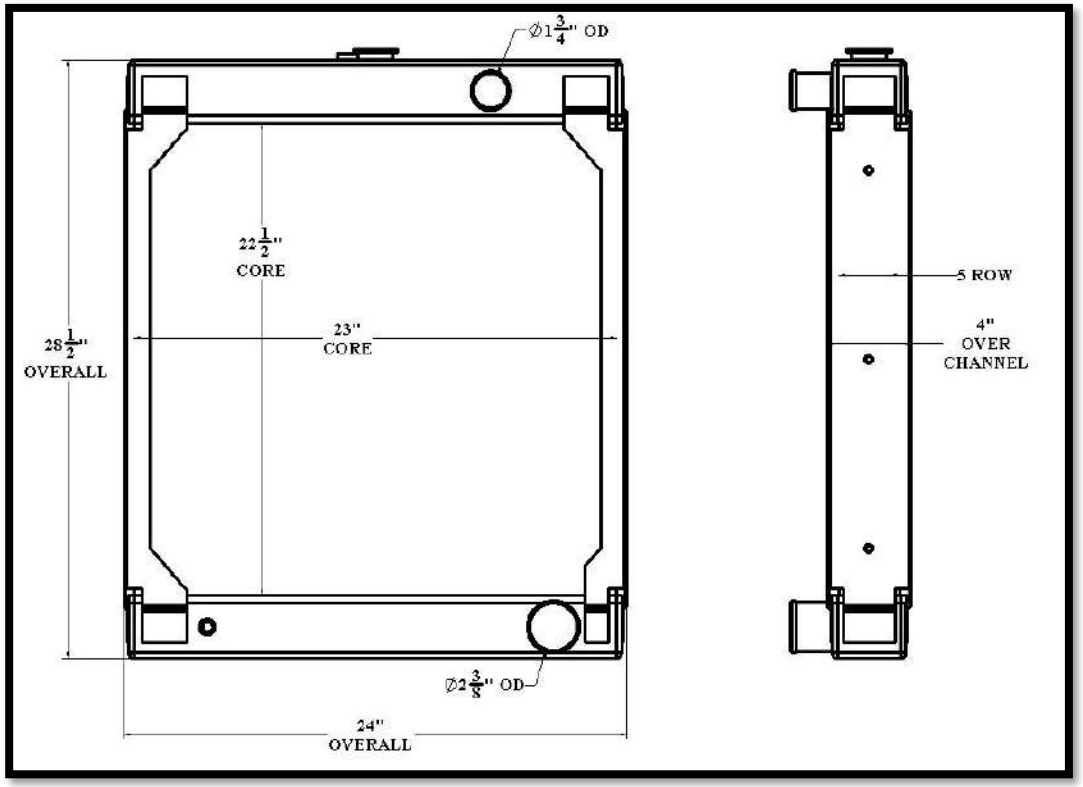

Overall Dimensions: 28-1/2” X 24” X 4”
Core: 22-1/2” X 23” X 5 ROW
Inlet: 1-3/4” OD
Outlet: 2-3/8” OD

Listed dimensions may vary slightly from OE

BGR Part Number: ST-0371-5I-NC

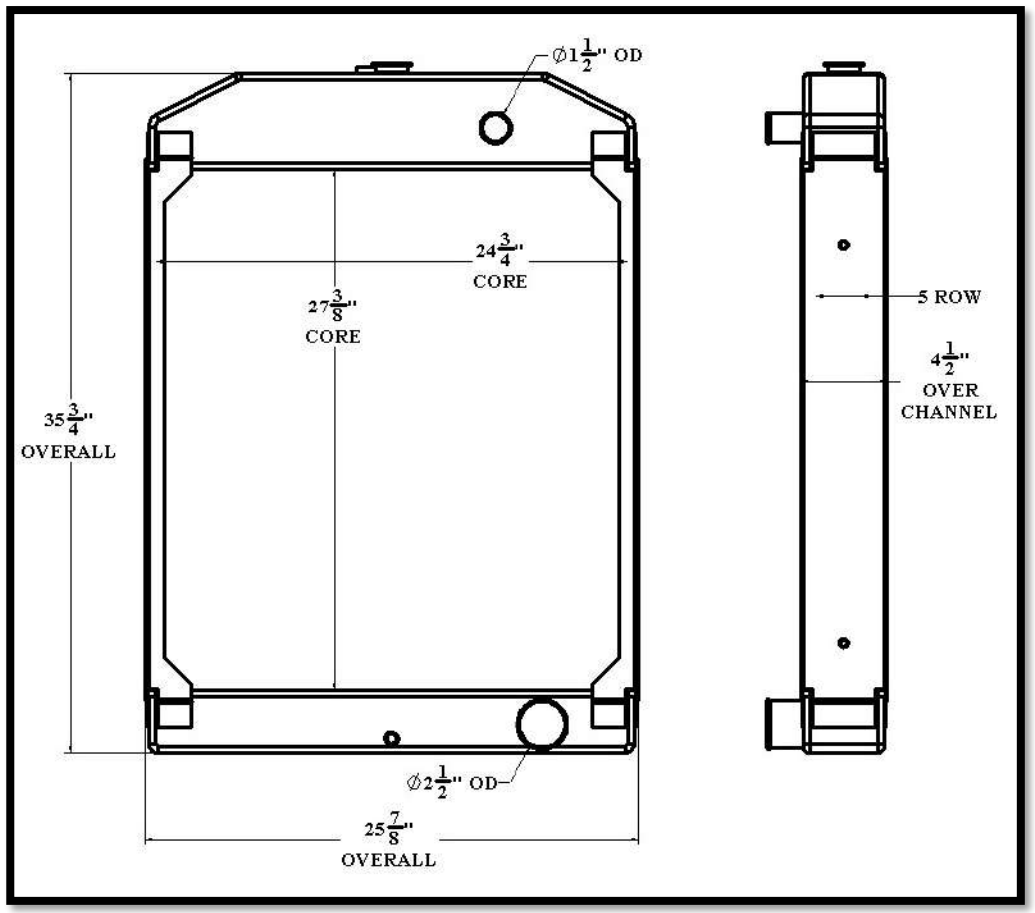

Overall Dimensions: 35-3/4” X 25-7/8” X 4-1/2”
Core: 27-3/8” X 24-3/4” X 5 ROW
Inlet: 1-1/2” OD
Outlet: 2-1/2” OD

Tel 1.800.774.2168
www.bgrradiator.com

BGR Part Number: ST-0372-3M-RB

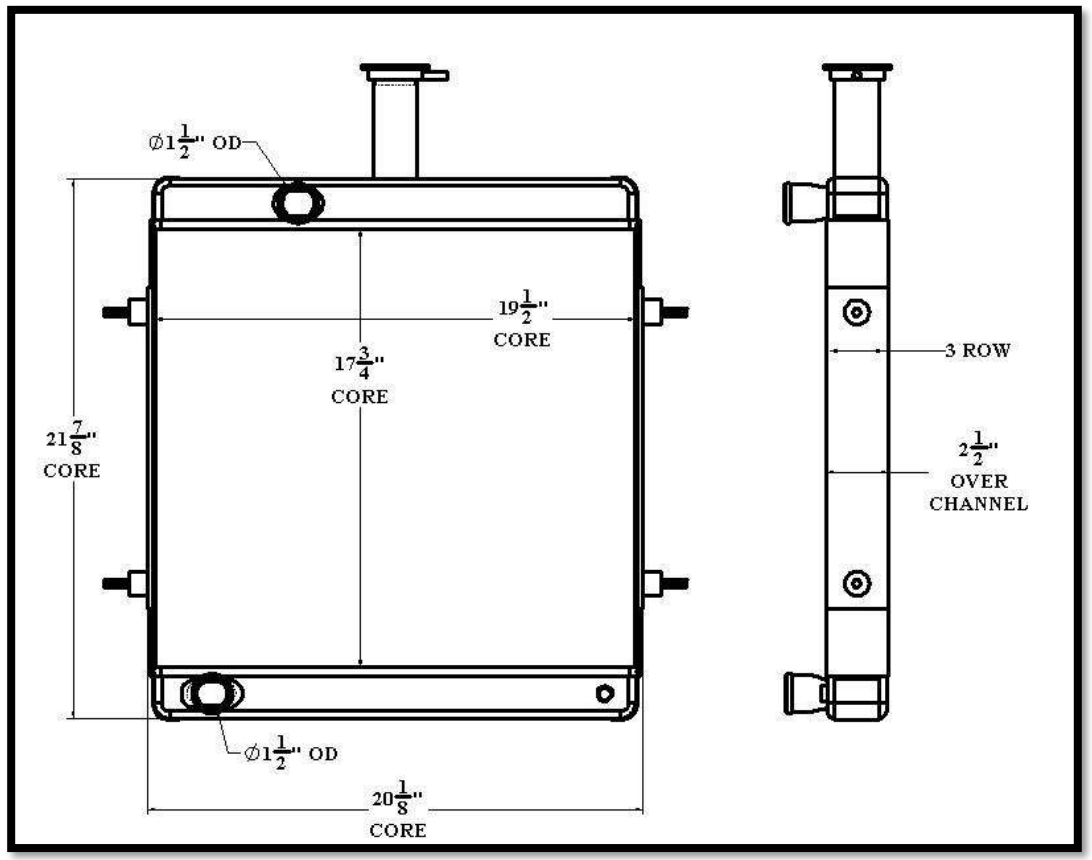

Overall Dimensions: 21-7/8” X 20-1/8” X 2-1/2”
Core: 17-3/4” X 19-1/2” X 3 ROW
Inlet: 1-1/2” OD
Outlet: 1-1/2” OD

ST371

Listed dimensions may vary slightly from OE

ST372

BGR Part Number: ST-0373-4I-F

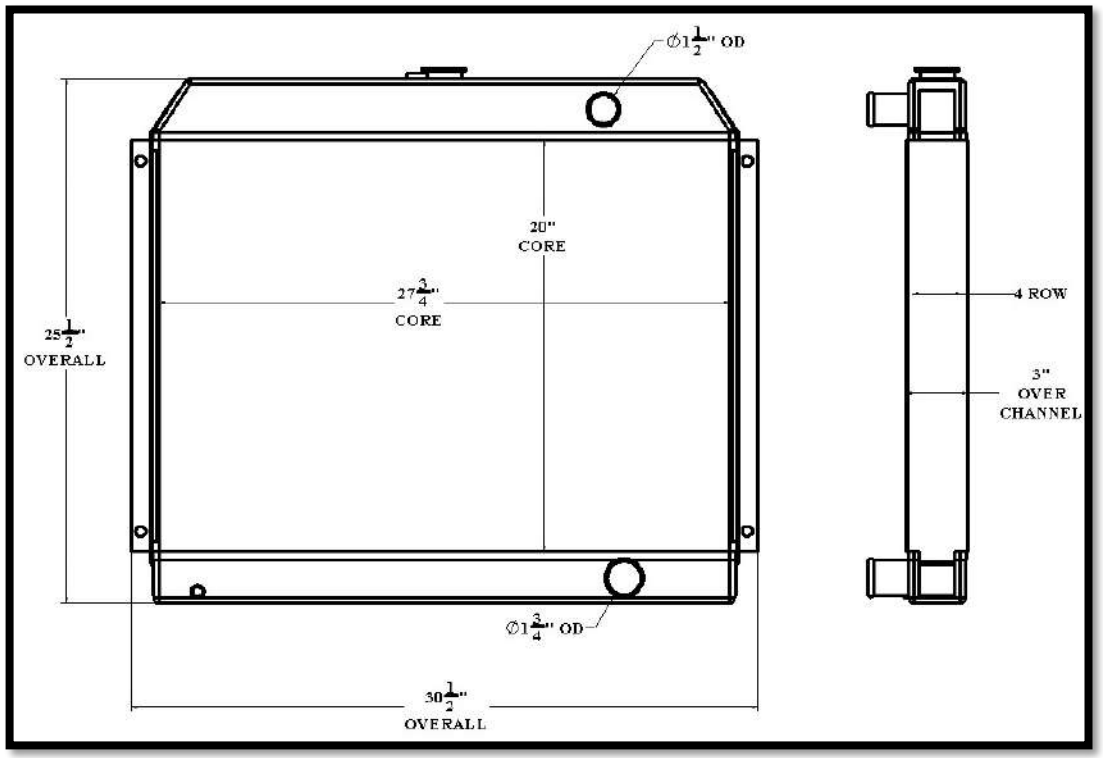

Overall Dimensions: 25-1/2” X 30-1/2” X 3”
Core: 20” X 27-3/4” X 4 ROW
Inlet: 1-1/2” OD
Outlet: 1-3/4” OD

Tel 1.800.774.2168
www.bgrradiator.com

BGR Part Number: ST-0374-4I-NC

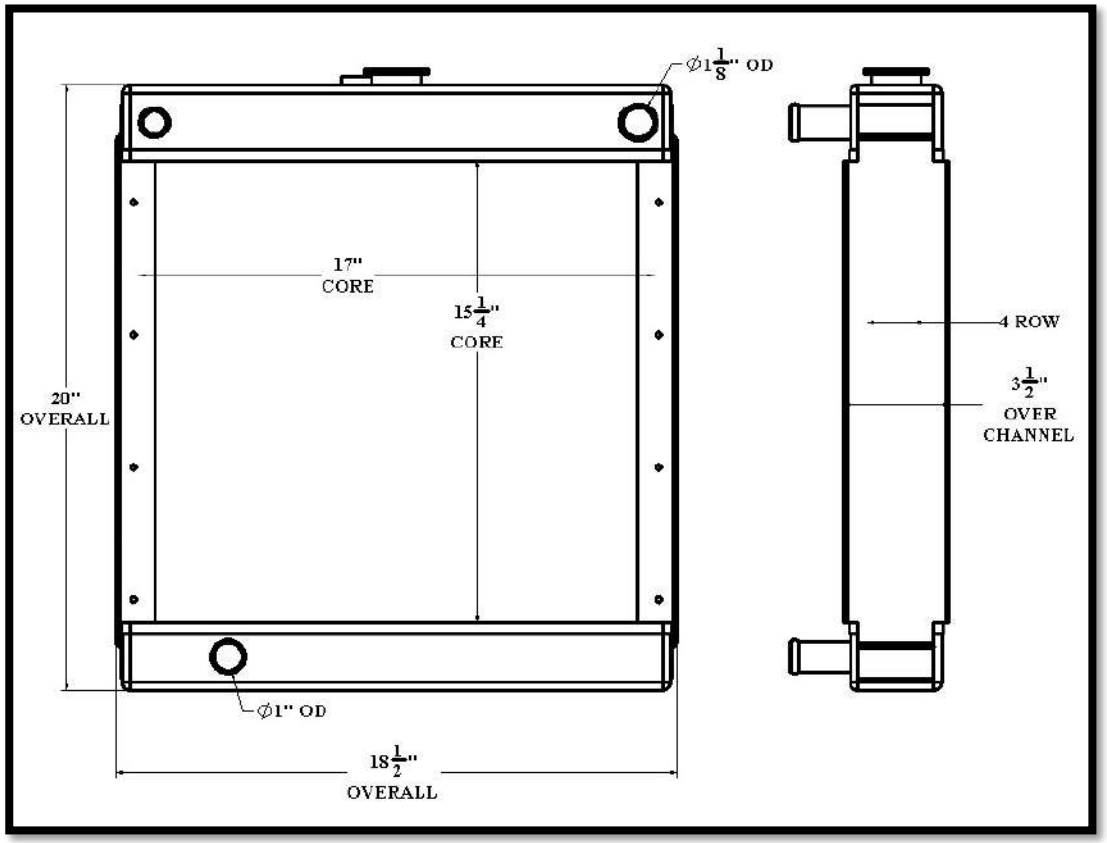

Overall Dimensions: 20” X 18-1/2” X 3-1/2”
Core: 15-1/4” X 17” X 4 ROW
Inlet: 1-1/8” OD
Outlet: 1” OD

ST373

Listed dimensions may vary slightly from OE

ST374

BGR Part Number: ST-0375-4I-NC

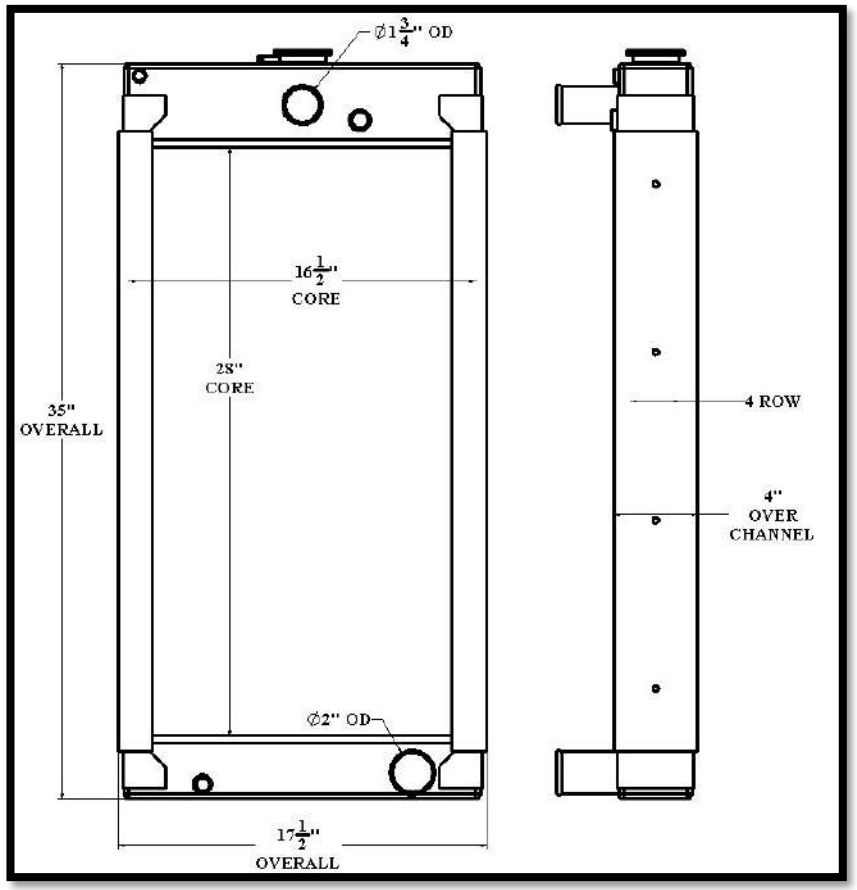

Overall Dimensions: 35” X 17-1/2” X 4”
Core: 28” X 16-1/2” X 4 ROW
Inlet: 1-3/4” OD
Outlet: 2” OD

Tel 1.800.774.2168
www.bgrradiator.com

BGR Part Number: ST-0376-3VT-EF
GENERAC 86131

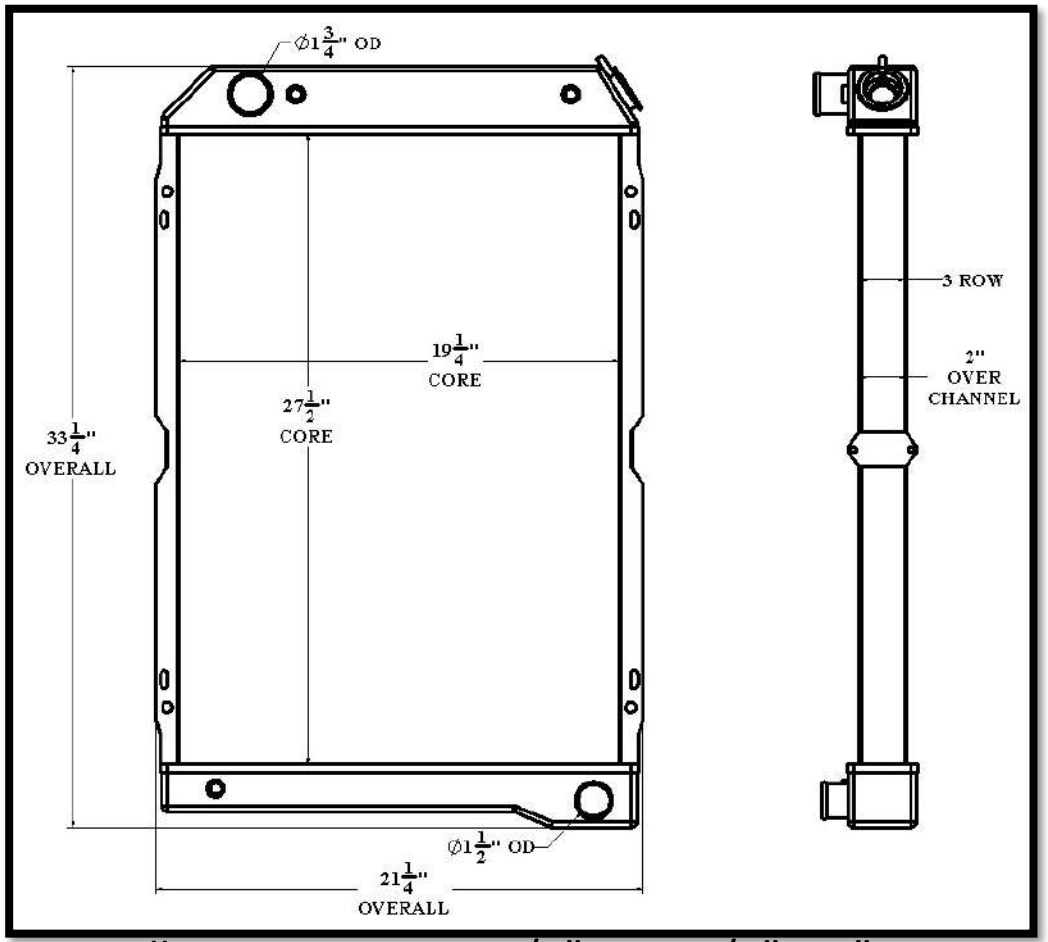

Overall Dimensions: 33-1/4” X 21-1/4” X 2”
Core: 27-1/2” X 19-1/4” X 3 ROW
Inlet: 1-3/4” OD
Outlet: 1-1/2” OD

Listed dimensions may vary slightly from OE

BGR Part Number: ST-0377-2VT-B
MN422112-2161, 431RA104

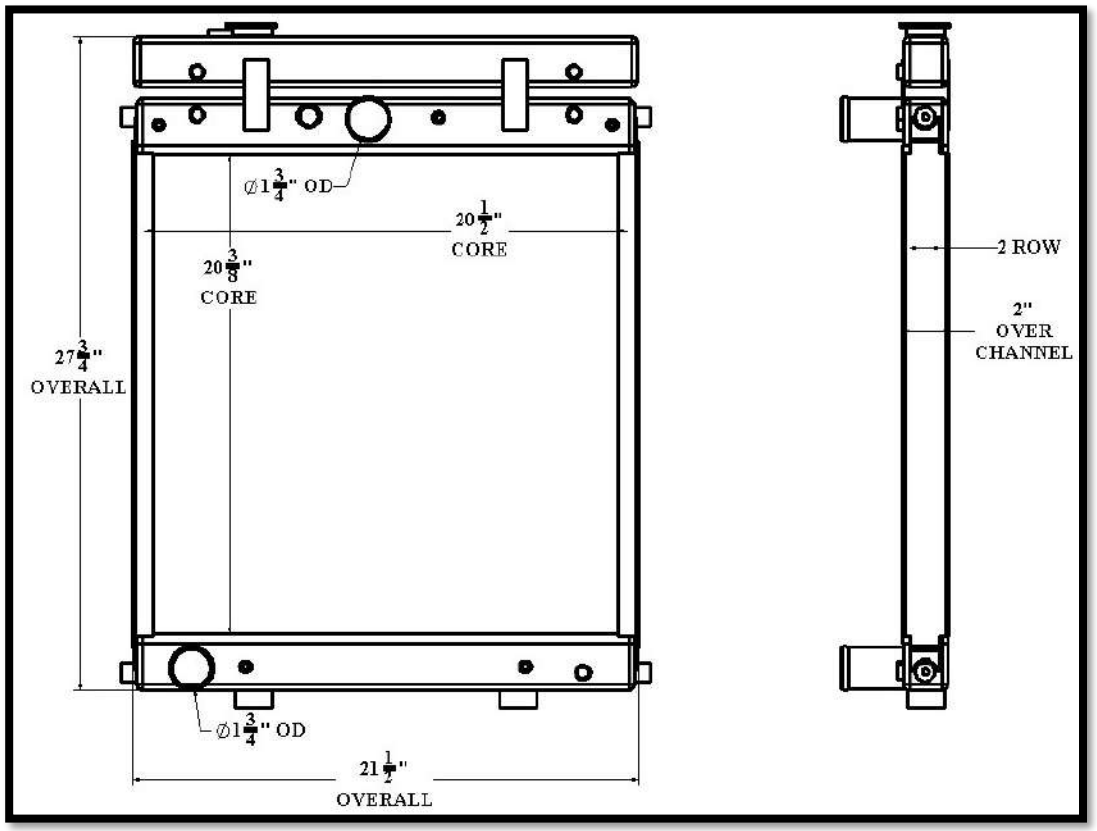

Overall Dimensions: 27-1/2” X 20-1/2” X 2”
Core: 20” X 19-1/4” X 2 ROW
Inlet: 1-3/4” OD
Outlet: 1-3/4” OD

Tel 1.800.774.2168
www.bgrradiator.com

BGR Part Number: ST-0378-4I-EF

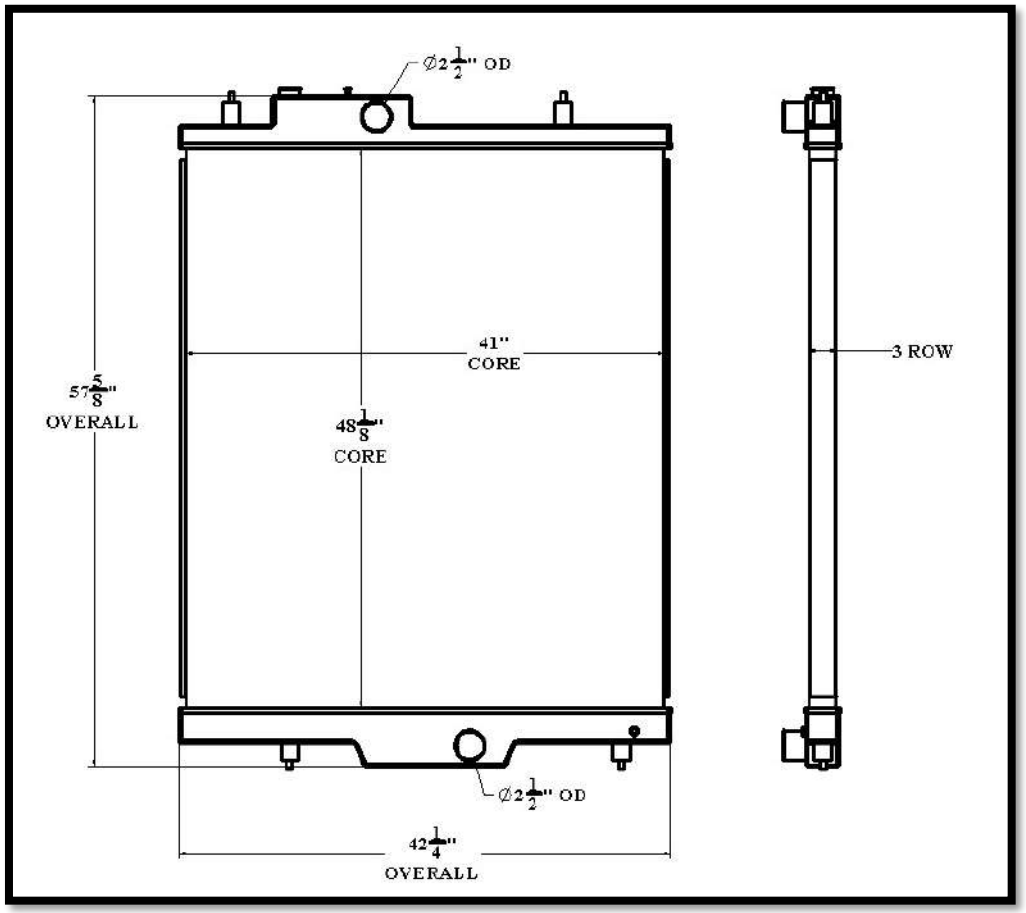

Overall Dimensions: 57-5/8” X 42-1/4”
Core: 48-1/8” X 41” X 3 ROW
Inlet: 2-1/2” OD
Outlet: 2-1/2” OD

ST377

Listed dimensions may vary slightly from OE

ST378

BGR Part Number: ST-0379-5I-EF
MN122440-2661

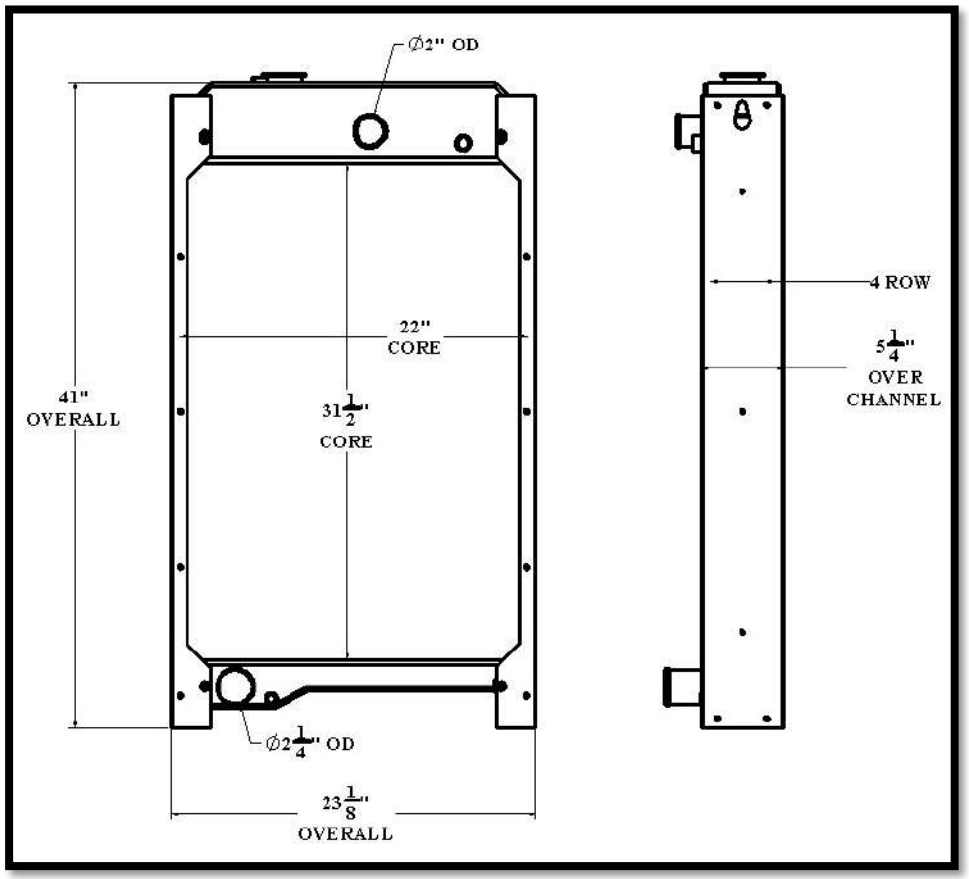

Overall Dimensions: 41” X 23-1/8” X 5-1/4”
Core: 31-1/2” X 22” X 4 ROW
Inlet: 2” OD
Outlet: 2-1/4” OD

Tel 1.800.774.2168
www.bgrradiator.com

BGR Part Number: ST-0380-4VT-NC
79000520

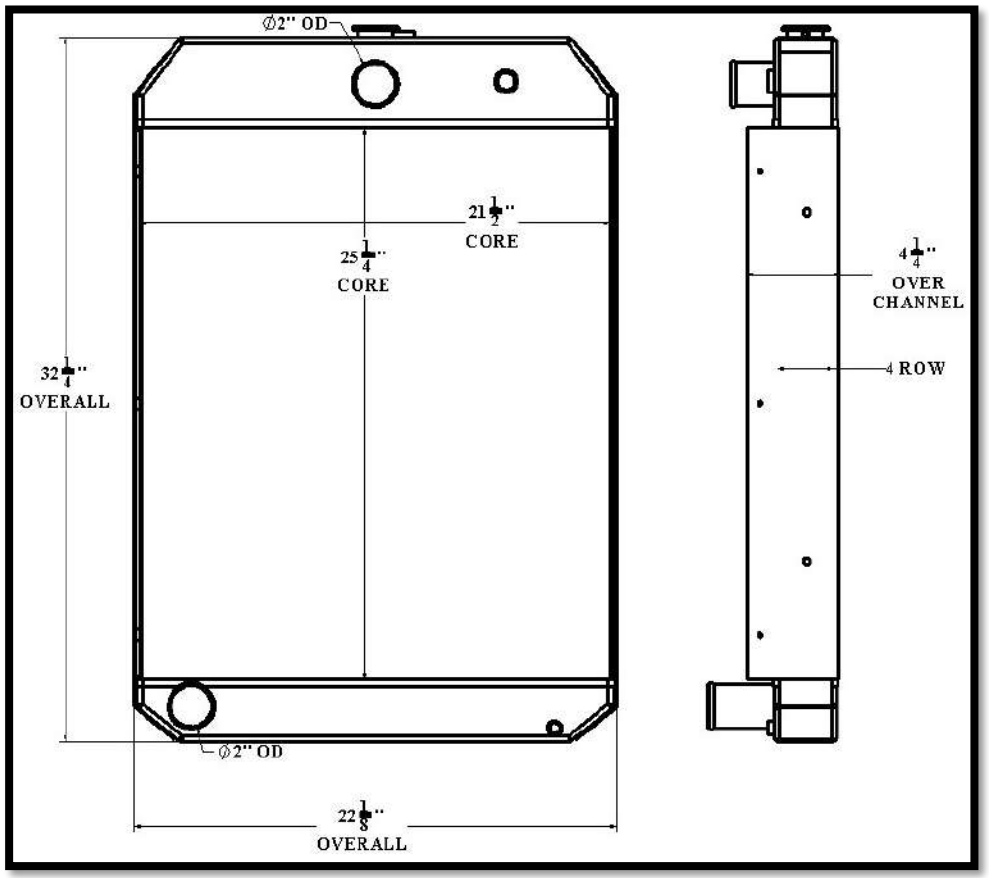

Overall Dimensions: 32-1/4” X 22-1/8” X 4-1/4”
Core: 25-1/4” X 21-1/4” X 4 ROW
Inlet: 2” OD
Outlet: 2” OD

ST379

Listed dimensions may vary slightly from OE

ST380

BGR Part Number: ST-0381-3VT-F
130-5114-02, 130-5114-01

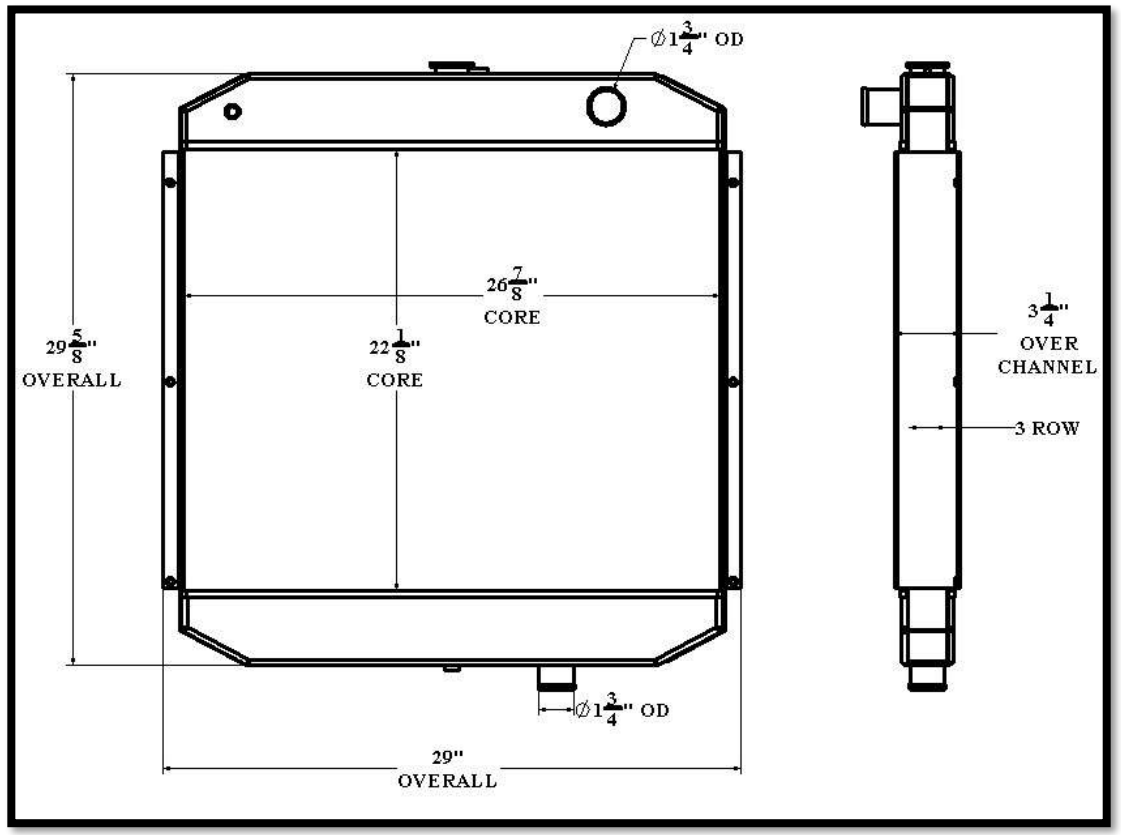

Overall Dimensions: 29-5/8” X 29” X 3-1/4”
Core: 21-1/8” X 26-7/8” X 3 ROW
Inlet: 1-3/4” OD
Outlet: 1-3/4” OD

Tel 1.800.774.2168
www.bgrradiator.com

BGR Part Number: ST-0382-8I-NC

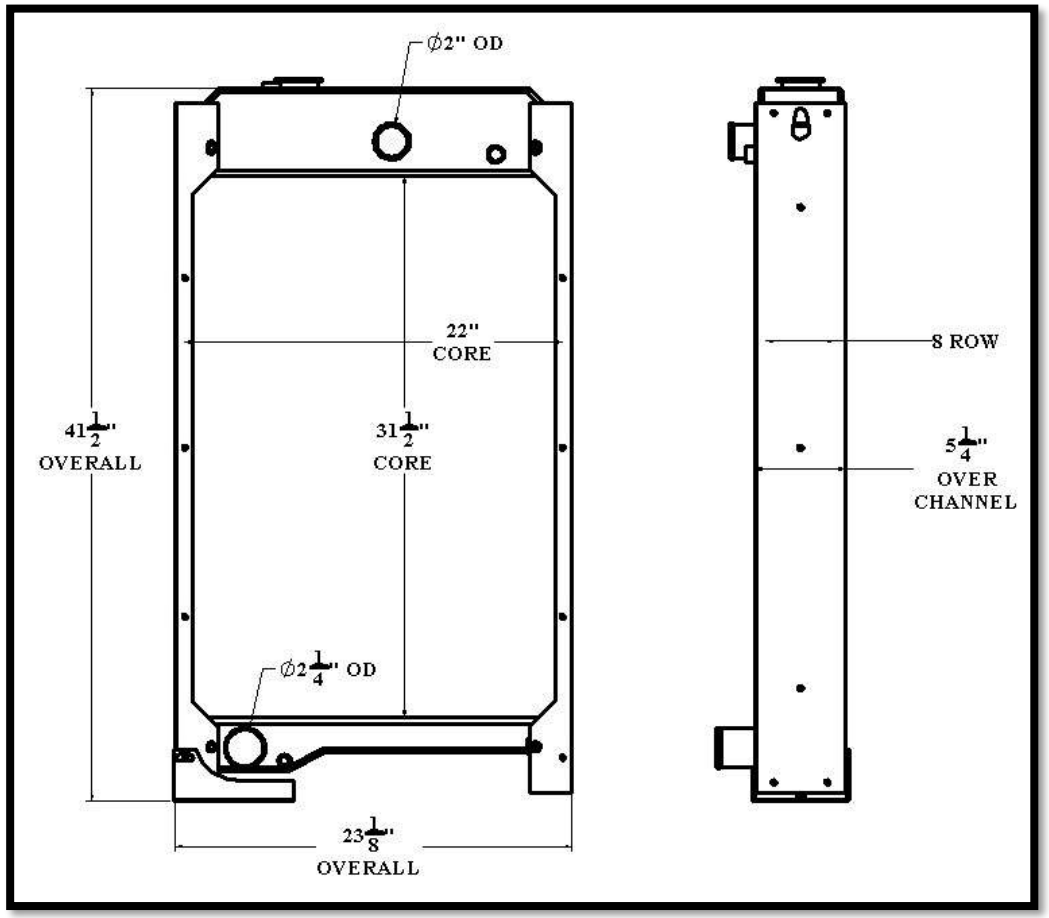

Overall Dimensions: 41-1/2” X 23-1/8” X 5-1/4”
Core: 31-1/2” X 22” X 8 ROW
Inlet: 2” OD
Outlet: 2-1/4” OD

Listed dimensions may vary slightly from OE

BGR Part Number: ST-0383-4M-NC
186-6691, 757-26890, KATOLIGHT SUA81836

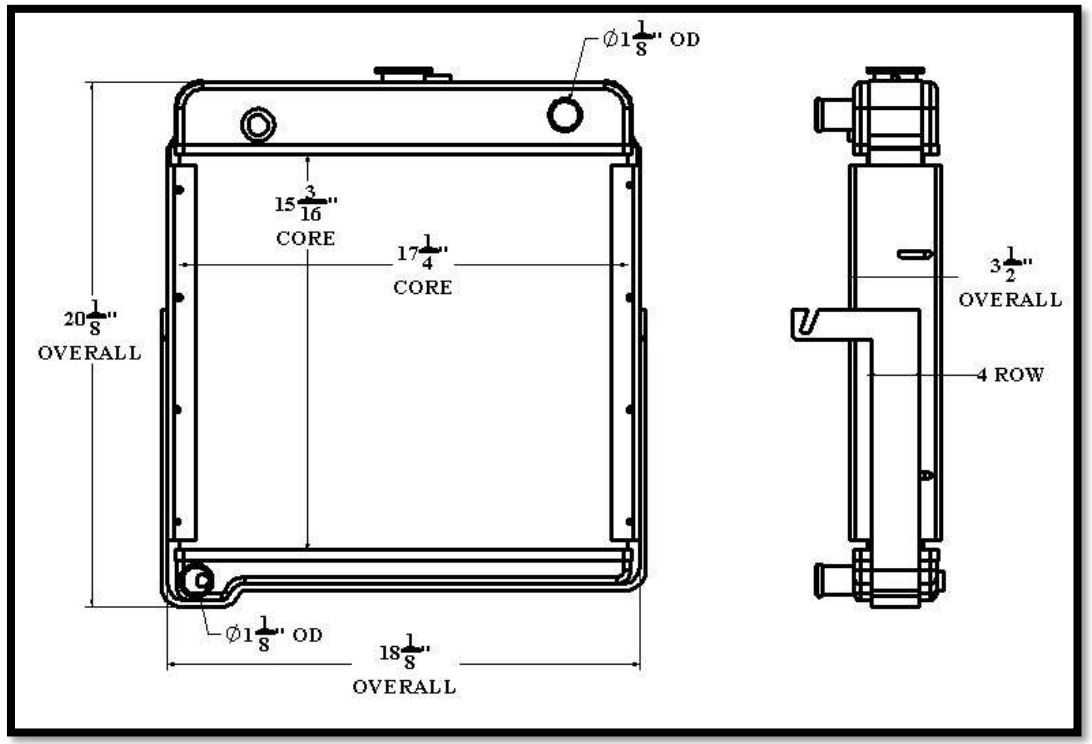

Overall Dimensions: 20-1/8” X 18-1/8” X 3-1/2”
Core: 15-3/16” X 17-1/4” X 4 ROW
Inlet: 1-1/8” OD
Outlet: 1-1/8” OD

Tel 1.800.774.2168
www.bgrradiator.com

BGR Part Number: ST-0384-5M-NC
A-291989

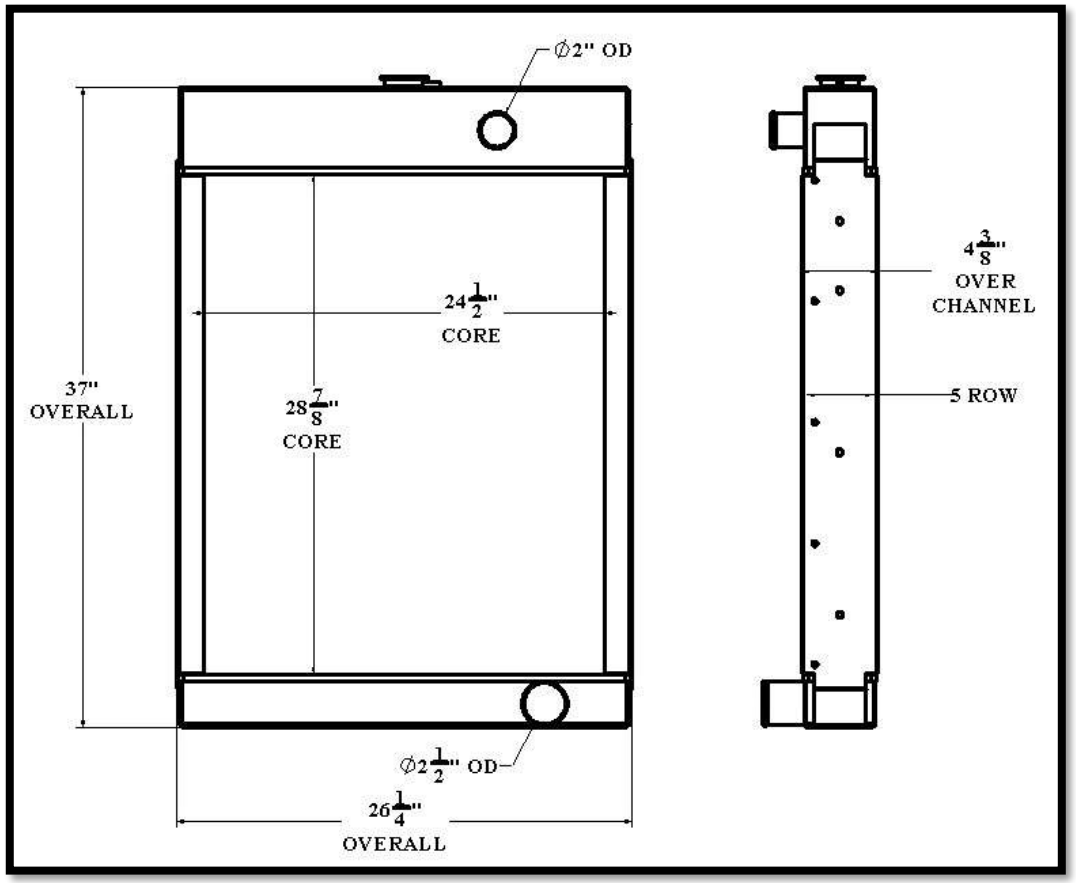

Overall Dimensions: 37” X 26” X 5-3/8”
Core: 28-7/8” X 24-1/2” X 5 ROW
Inlet: 2” OD
Outlet: 2-1/2” OD

ST383

Listed dimensions may vary slightly from OE

ST384

BGR Part Number: ST-0385-7X-NC

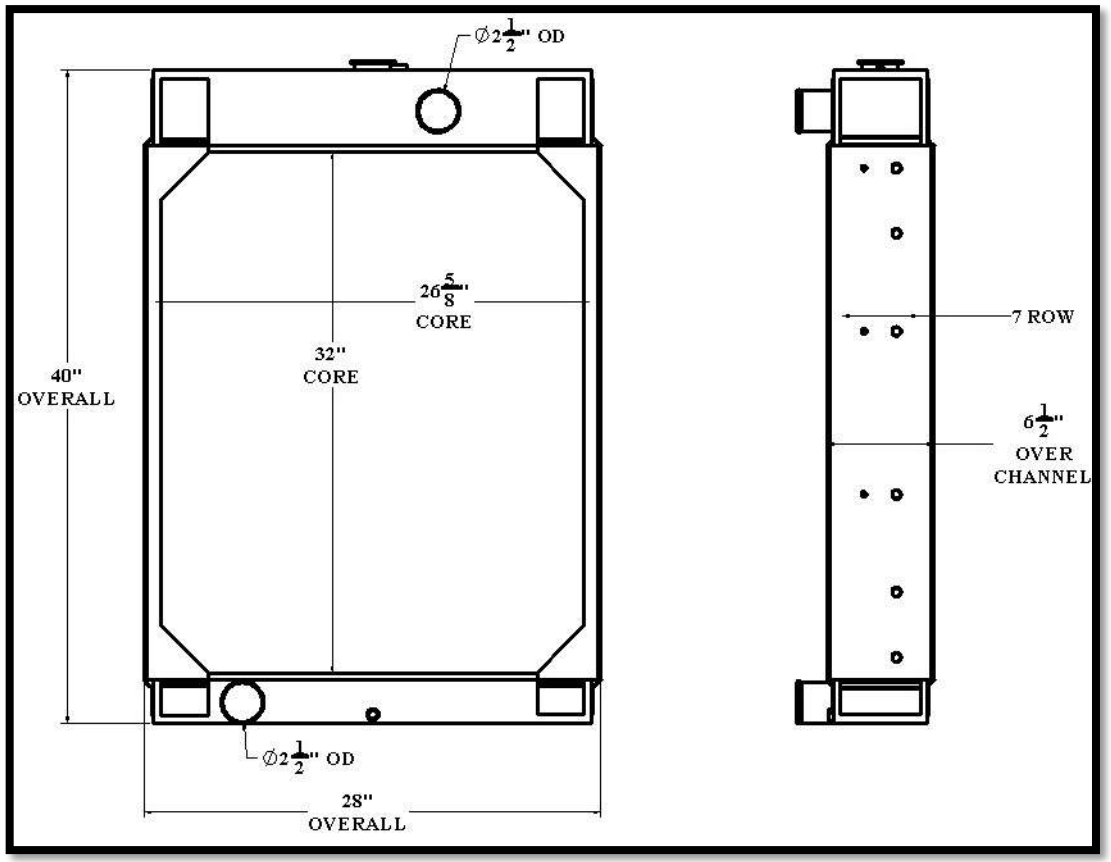

Overall Dimensions: 40” X 28” X 6-1/2”
Core: 32” X 26-5/8” X 7 ROW
Inlet: 2-1/2” OD
Outlet: 2-1/2” OD

Tel 1.800.774.2168
www.bgrradiator.com

BGR Part Number: ST-0386



Overall Dimensions:
Core:
Inlet:
Outlet:

ST385

Listed dimensions may vary slightly from OE

ST386

BGR Part Number: ST-0387-7X-EF

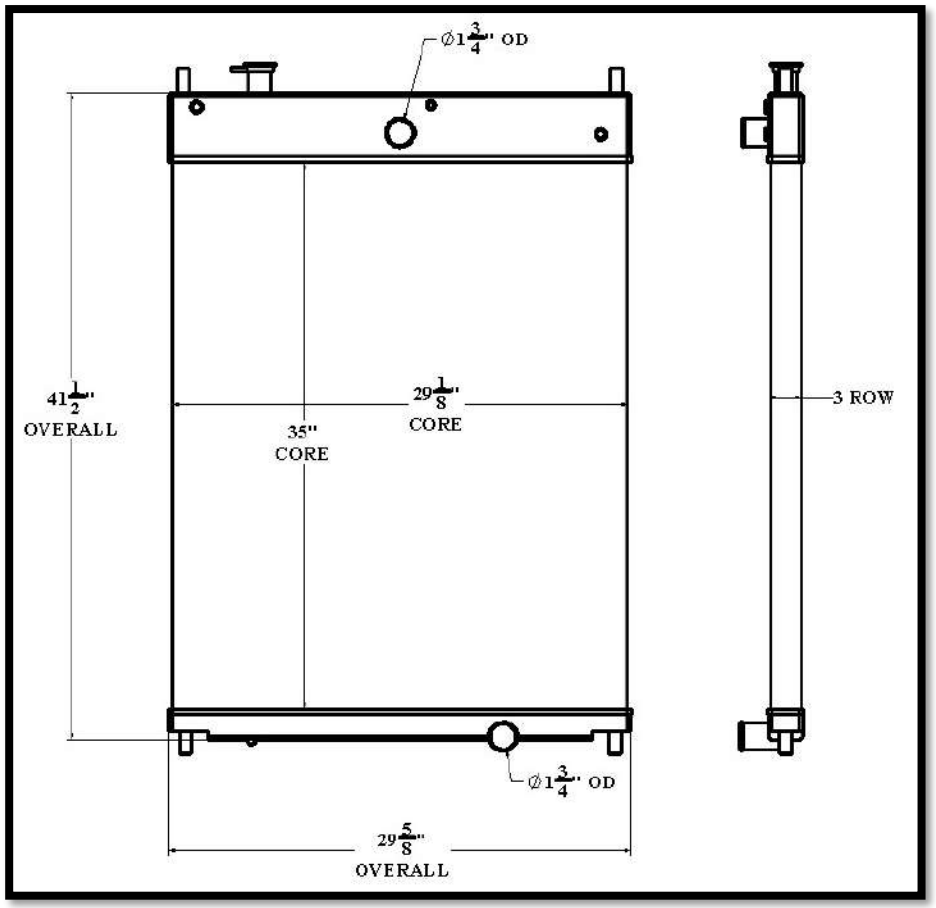

Overall Dimensions: 41-1/2” X 29-5/8”
Core: 35” X 29-1/2” X 3 ROW
Inlet: 1-3/4” OD
Outlet: 1-3/4” OD

Tel 1.800.774.2168
www.bgrradiator.com

BGR Part Number: ST-0388-5I-NC
8045778, 0021114000

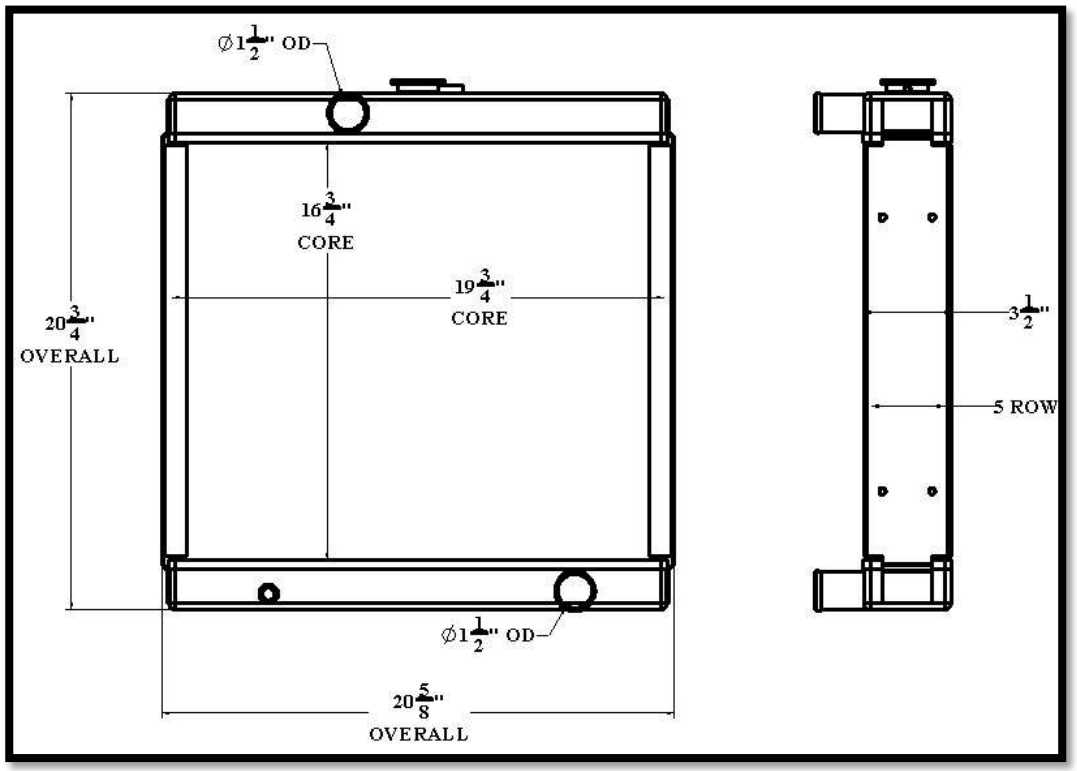

Overall Dimensions: 20-3/4” X 20-5/8” X 3-1/2
Core: 16-3/4” X 20-5/8” X 5 ROW
Inlet: 1-1/2” OD
Outlet: 1-1/2” OD

Listed dimensions may vary slightly from OE

BGR Part Number: ST-0389-6I-NC
A-343525, 1A18216

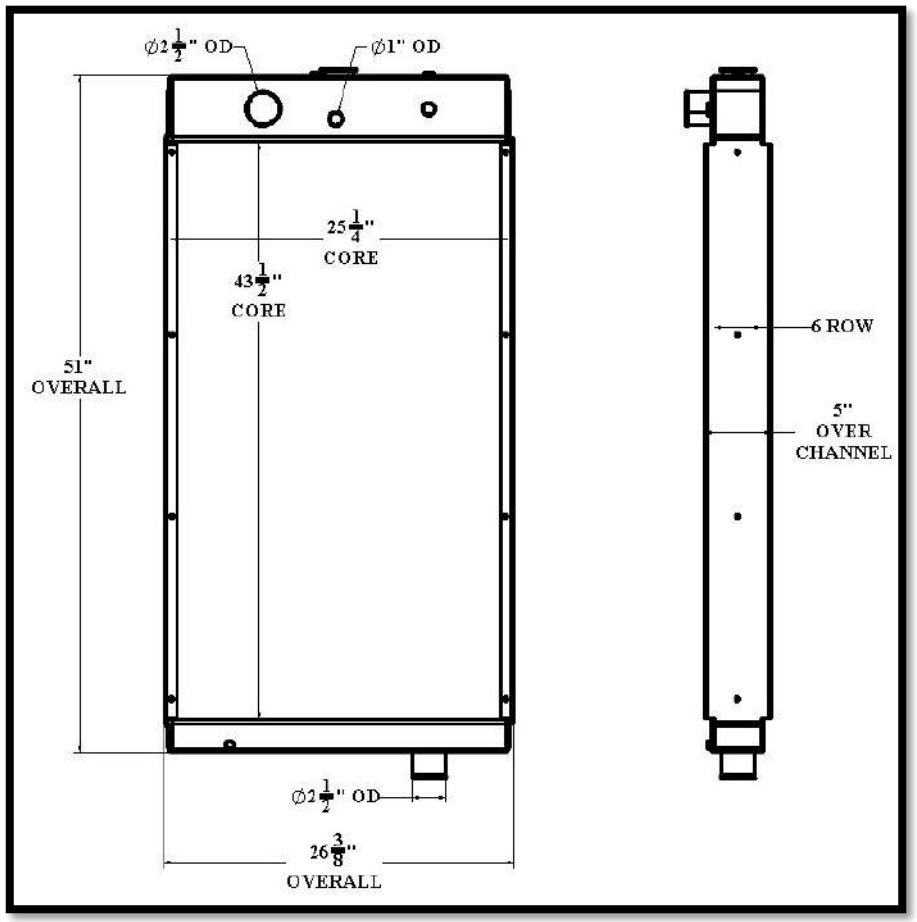

Overall Dimensions: 51” X 26-3/8” X 5”
Core: 43-1/2” X 25-1/4” X 6 ROW
Inlet: 2-1/2” OD, 1” OD
Outlet: 2-1/2” OD

Tel 1.800.774.2168
www.bgrradiator.com

BGR Part Number: ST-0390-4I-NC
69000715, 79000716

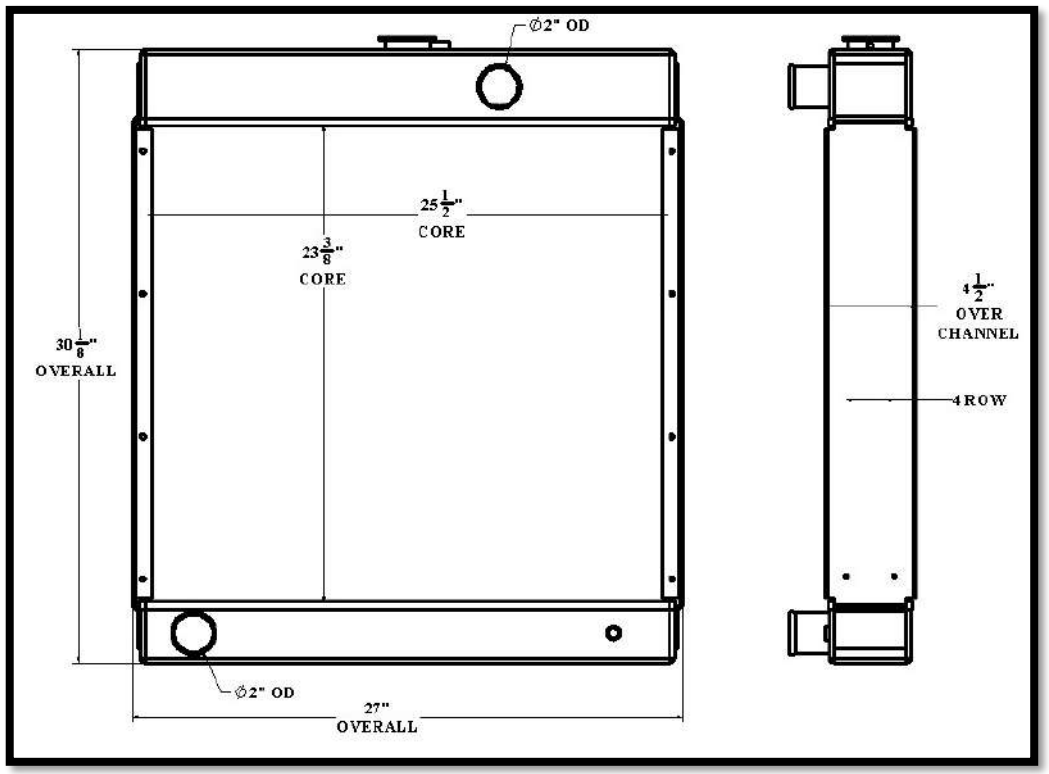

Overall Dimensions: 30-1/8” X 27” X 4-1/2
Core: 23-3/8” X 25-1/2” X 4ROW
Inlet: 2” OD
Outlet: 2” OD

Listed dimensions may vary slightly from OE

BGR Part Number: ST-0391-5I-F

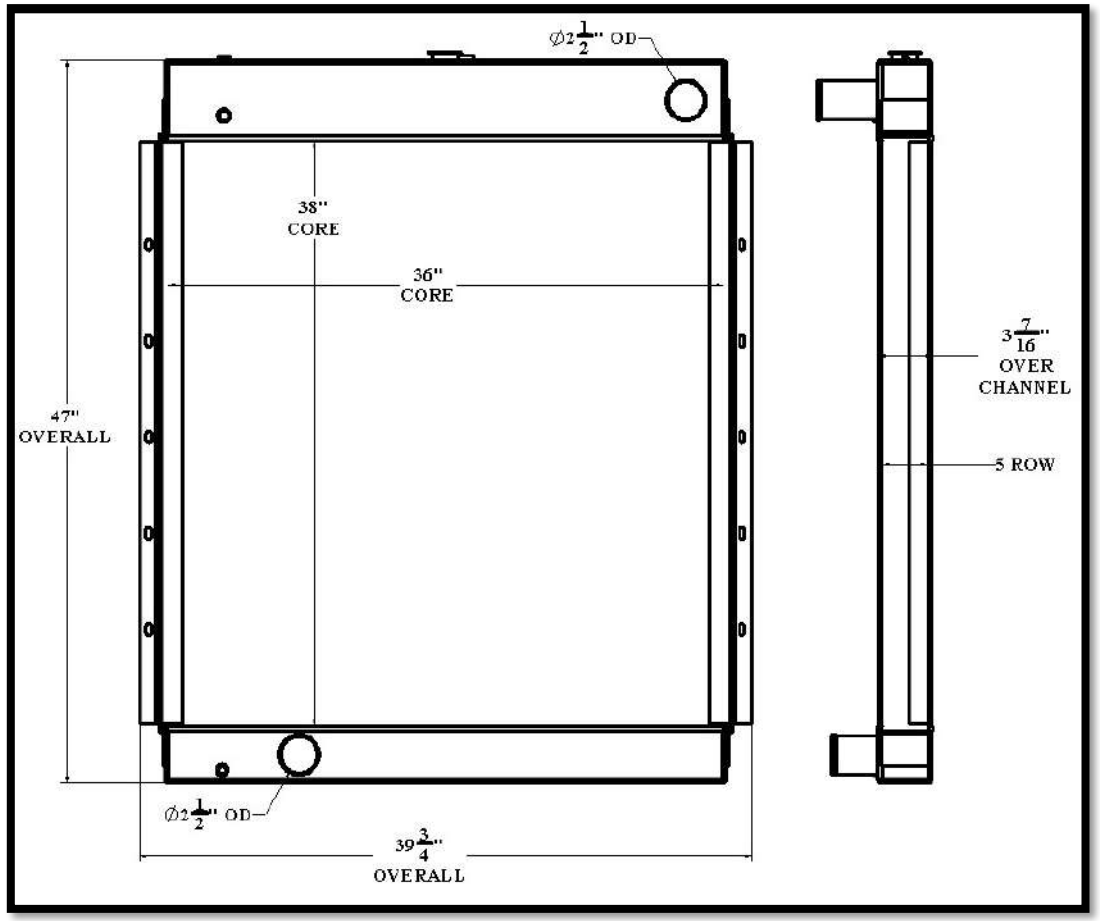

Overall Dimensions: 47” X 39-3/4” X 3-7/16”
Core: 38” X 36” X 5 ROW
Inlet: 2-1/2” OD
Outlet: 2-1/2” OD

Tel 1.800.774.2168
www.bgrradiator.com

BGR Part Number: ST-0392-5Z-EF

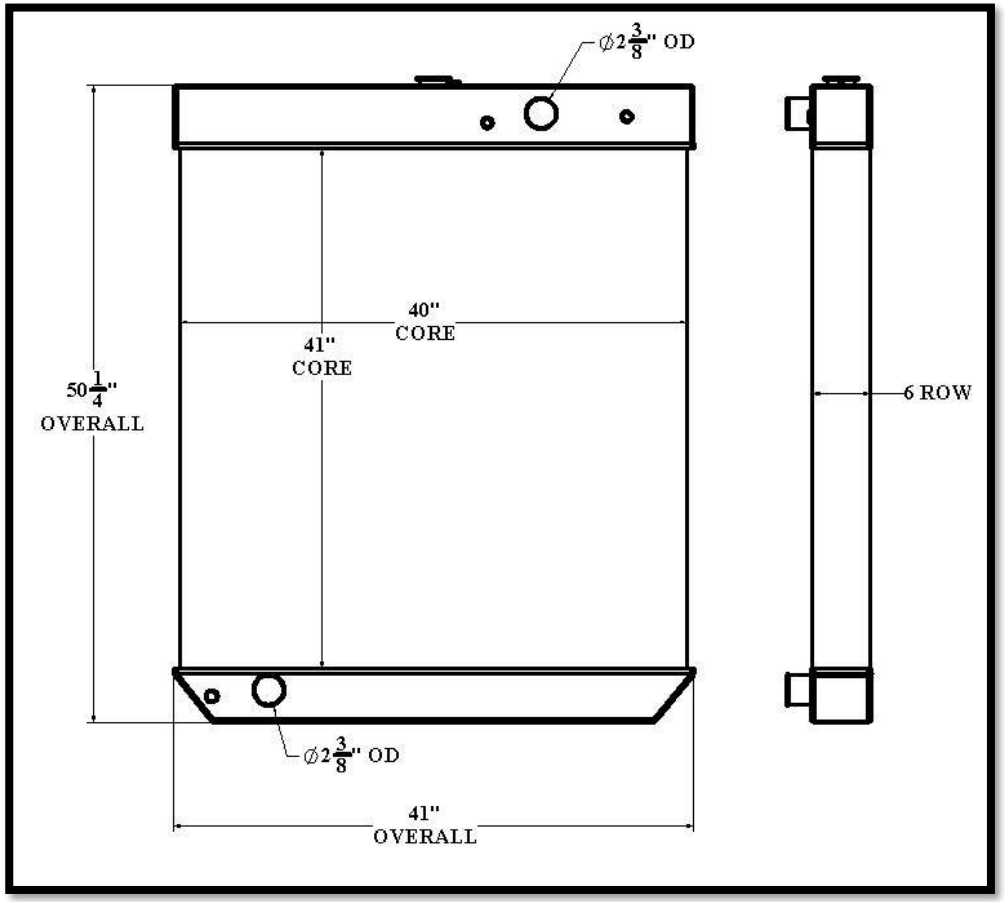

Overall Dimensions: 50-1/4” X 41”
Core: 41” X 40” X 6 ROW
Inlet: 2-3/8” OD
Outlet: 2-3/8” OD

Listed dimensions may vary slightly from OE

BGR Part Number: ST-0393-5Z-EF
MN422000-41703c

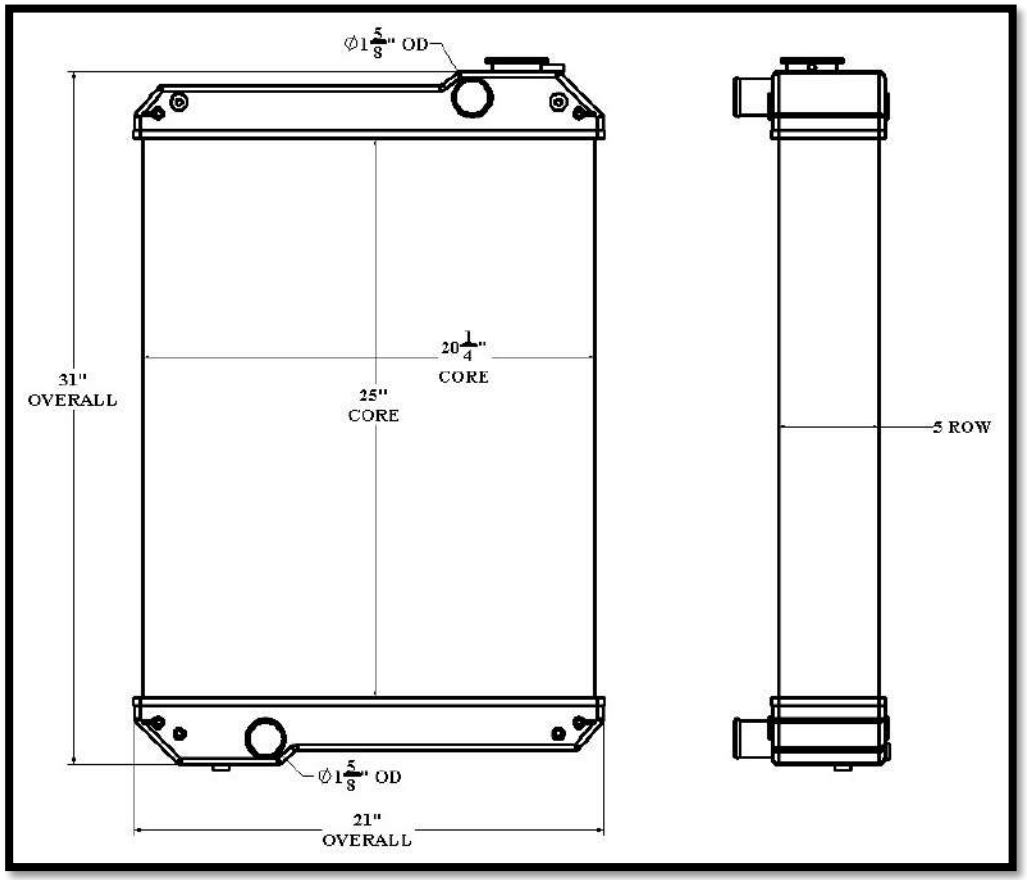

Overall Dimensions: 31” X 21”
Core: 25” X 20-1/4” X 5 ROW
Inlet: 1-5/8” OD
Outlet: 1-5/8” OD

Tel 1.800.774.2168
www.bgrradiator.com

BGR Part Number: ST-0394-5I-B

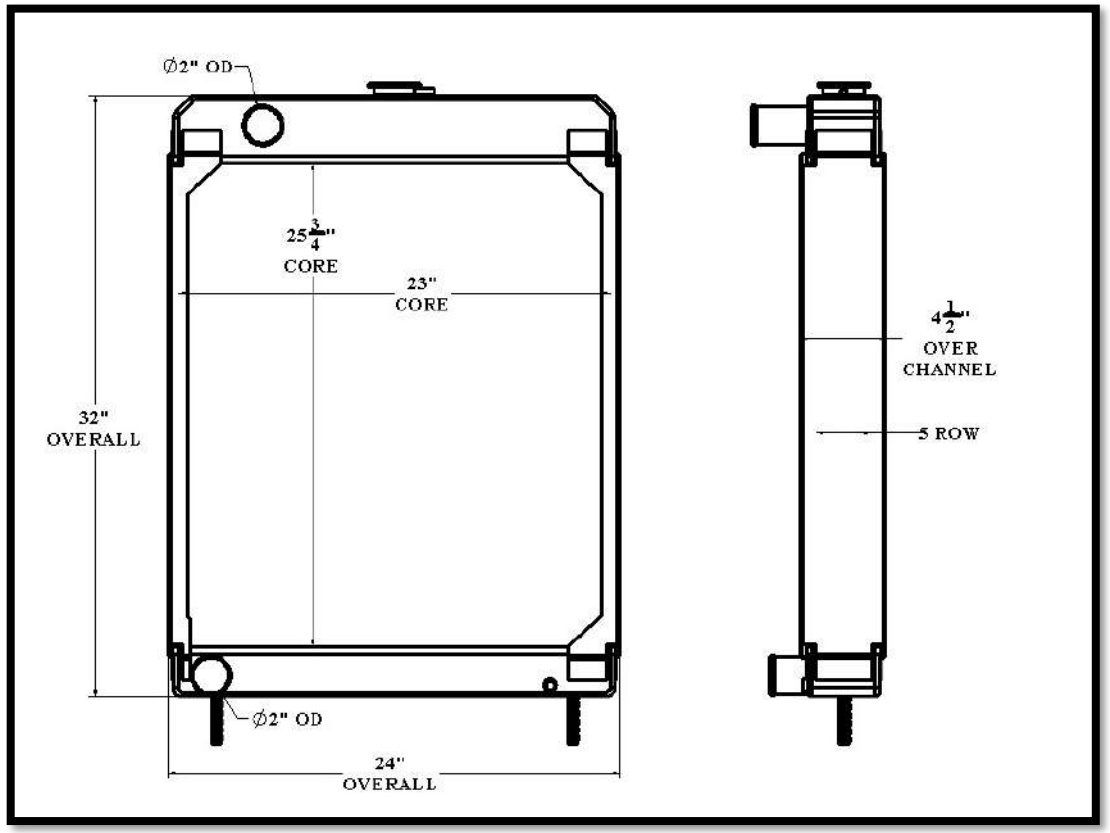

Overall Dimensions: 32” X 24” X 4-1/2”
Core: 25-3/4” X 23” X 5 ROW
Inlet: 2” OD
Outlet: 2” OD

ST393

Listed dimensions may vary slightly from OE

ST394

BGR Part Number: ST-0395-5I-F
O31183

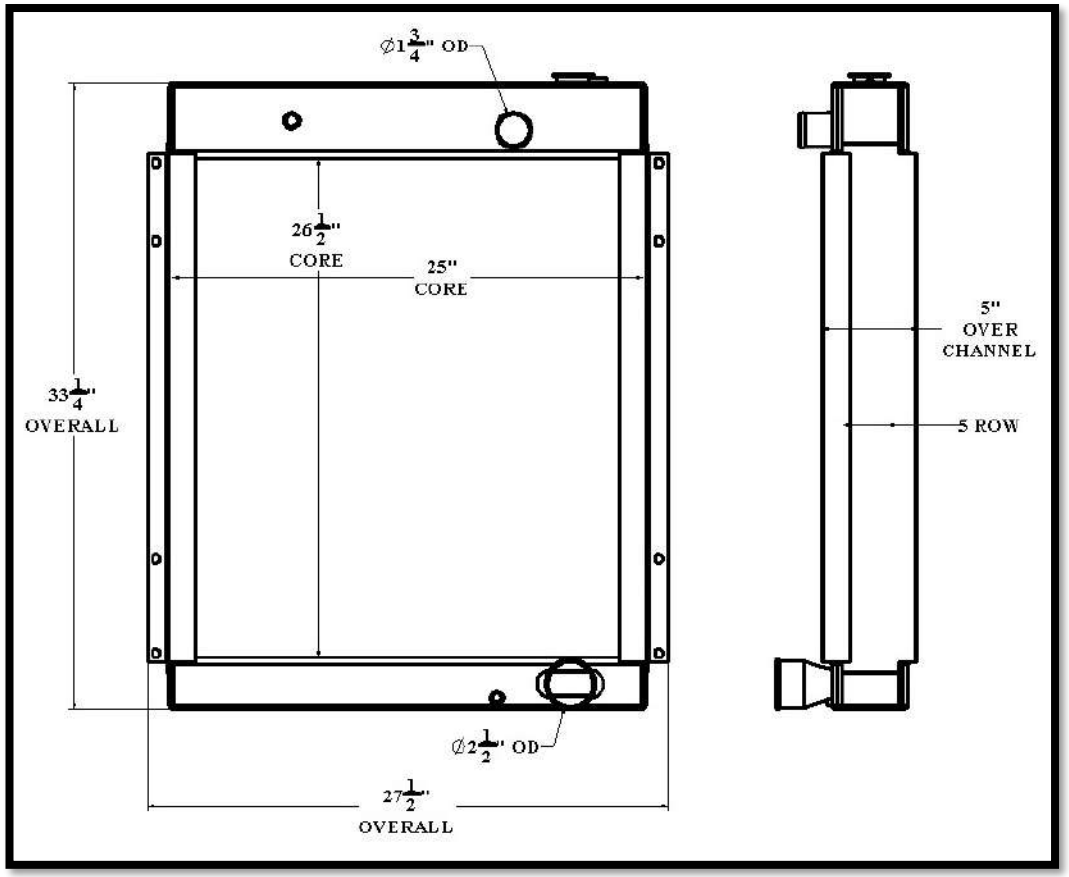

Overall Dimensions: 33-1/4” X 27-1/2” X 5”
Core: 26-1/2” X 25” X 5 ROW
Inlet: 1-3/4” OD
Outlet: 2-1/2” OD

Tel 1.800.774.2168
www.bgrradiator.com

BGR Part Number: ST-0396-4I-F
GENERAC 087871, 14140, 120.1301.100

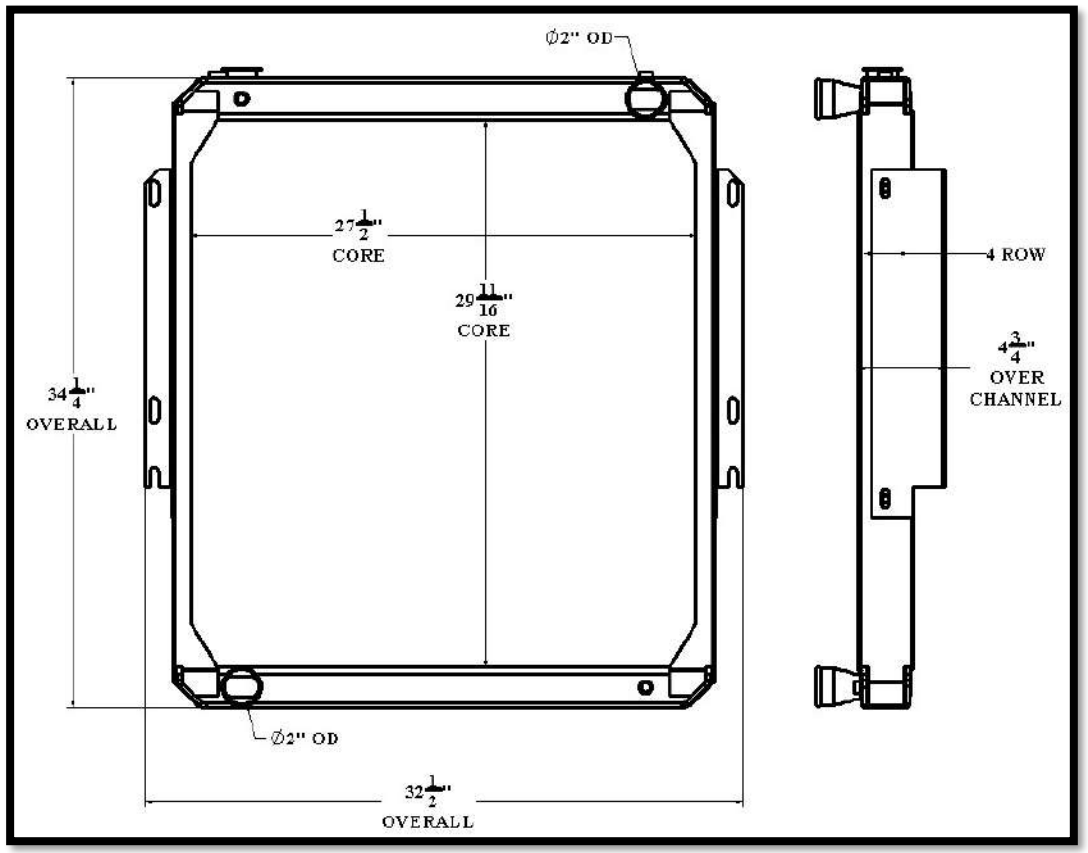

Overall Dimensions: 34-1/4” X 32-1/2” X 4-3/4”
Core: 27-1/2” X 29-11/16” X 4 ROW
Inlet: 2” OD
Outlet: 2” OD

ST395

Listed dimensions may vary slightly from OE

ST396

BGR Part Number: ST-0397-4I-B
20224601C

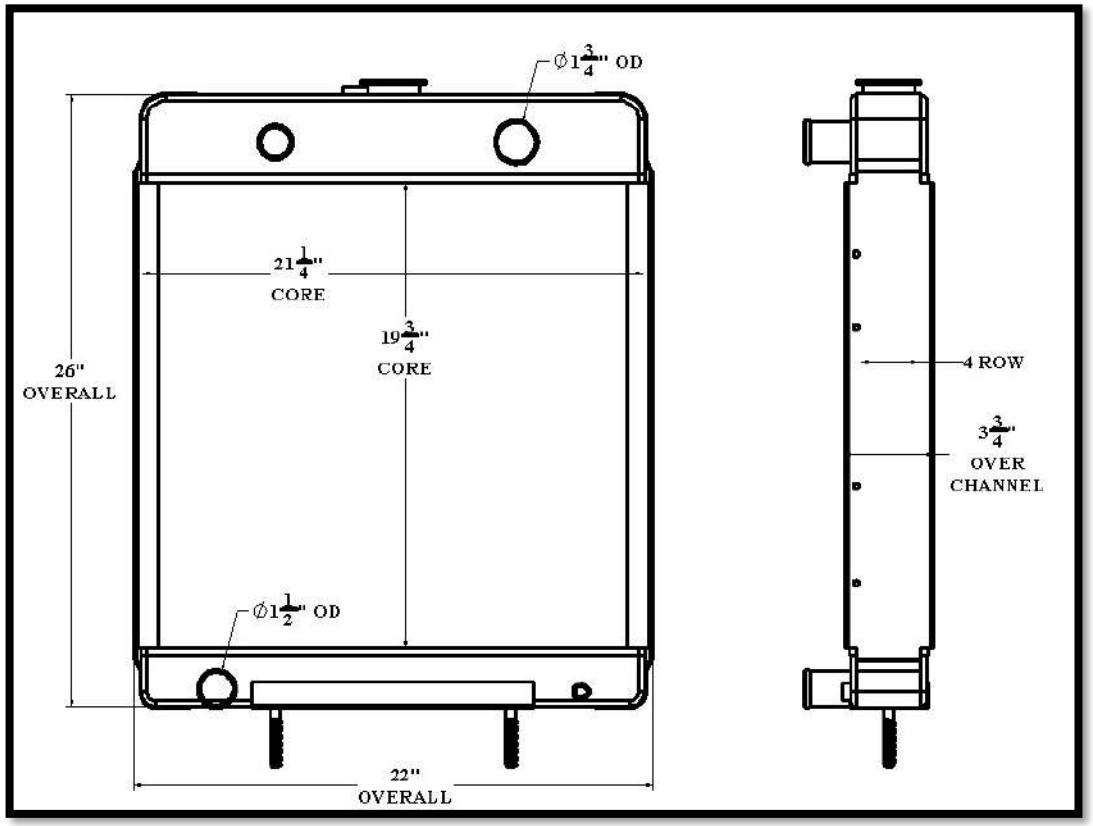

Overall Dimensions: 26” X 22” X 3-3/4”
Core: 21-1/4” X 19-3/4” X 4 ROW
Inlet: 1-3/4” OD
Outlet: 1-1/2” OD

Tel 1.800.774.2168
www.bgrradiator.com

BGR Part Number: ST-0398-5I-EF

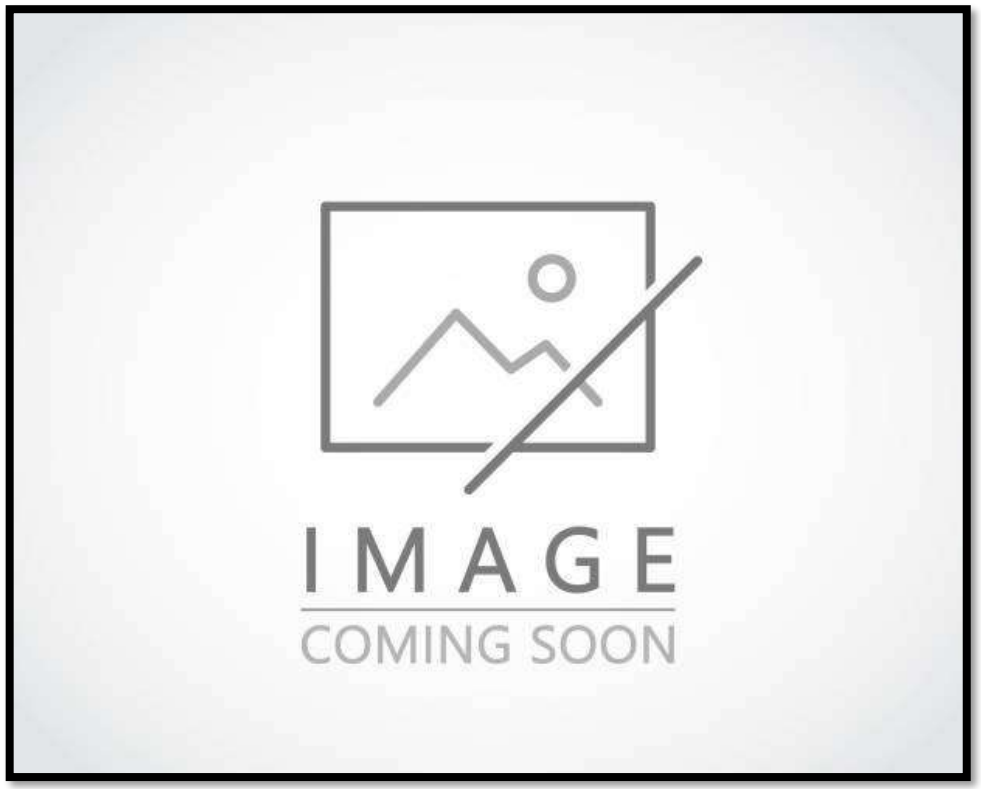

Overall Dimensions:
Core:
Inlet:
Outlet:

Listed dimensions may vary slightly from OE

BGR Part Number: ST-0399-6I-NC

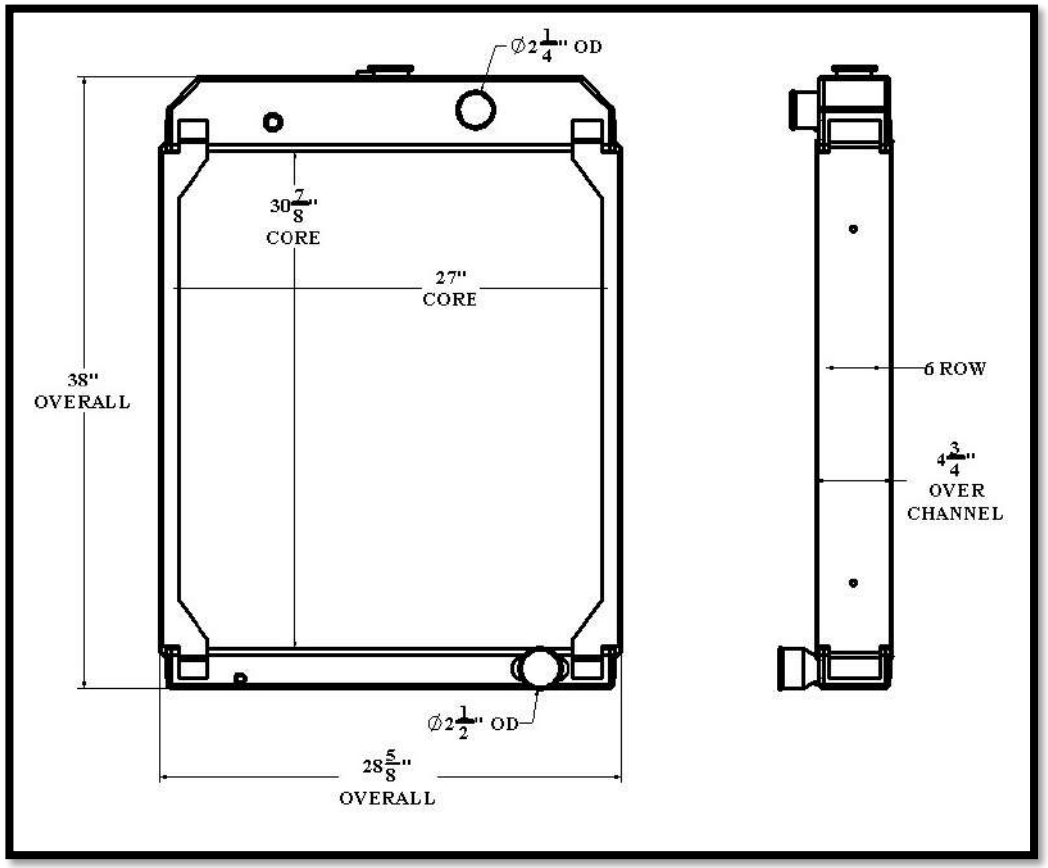

Overall Dimensions: 38” X 28-5/8” X 4-3/4”
Core: 30-7/8” X 27” X 6 ROW
Inlet: 2-1/4” OD
Outlet: 2-1/2” OD

Tel 1.800.774.2168
www.bgrradiator.com

BGR Part Number: ST-0400-2M-EF

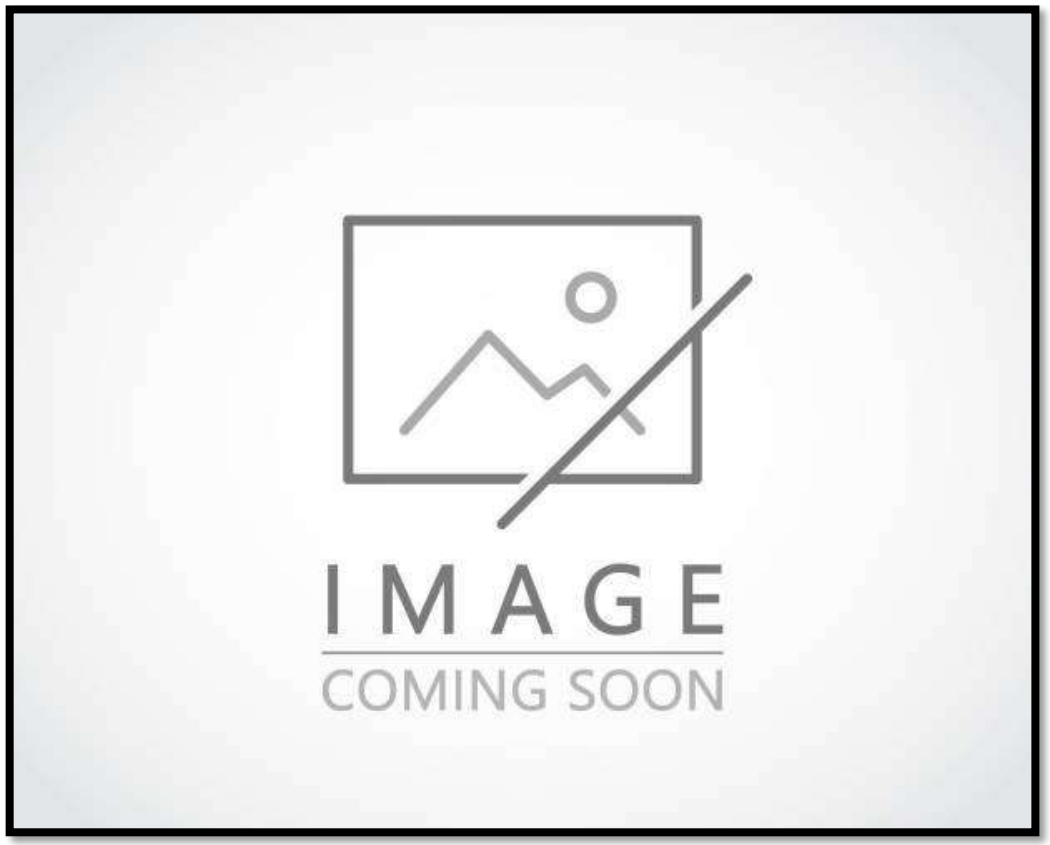

Overall Dimensions:
Core:
Inlet:
Outlet:

ST399

Listed dimensions may vary slightly from OE

ST400

BGR Part Number: ST-0401-4I-EF
100311063

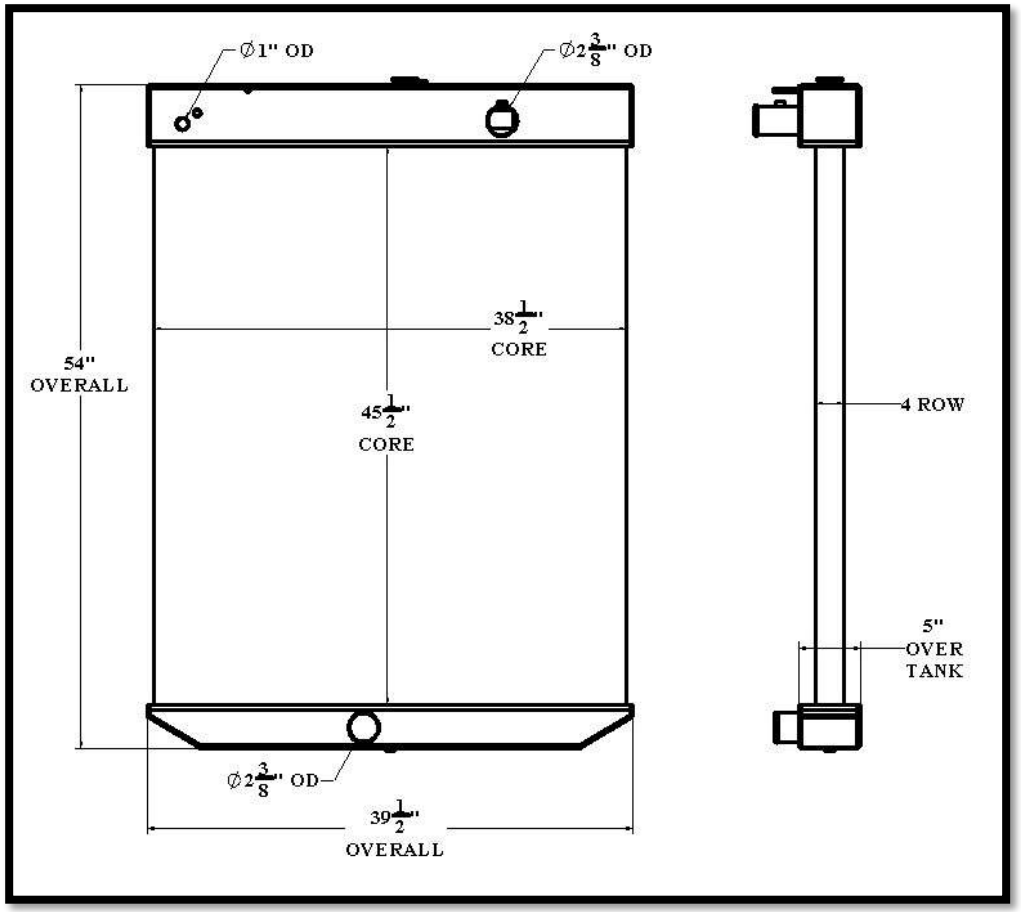

Overall Dimensions: 54” X 39-1/2” X 5”
Core: 45-1/2” X 38-1/2” X 4 ROW
Inlet: 2-3/8”, 1” OD
Outlet: 2-3/8” OD

Tel 1.800.774.2168
www.bgrradiator.com

BGR Part Number: ST-0402-2X-F
1414G,0G1286G, OE-120,1301,000

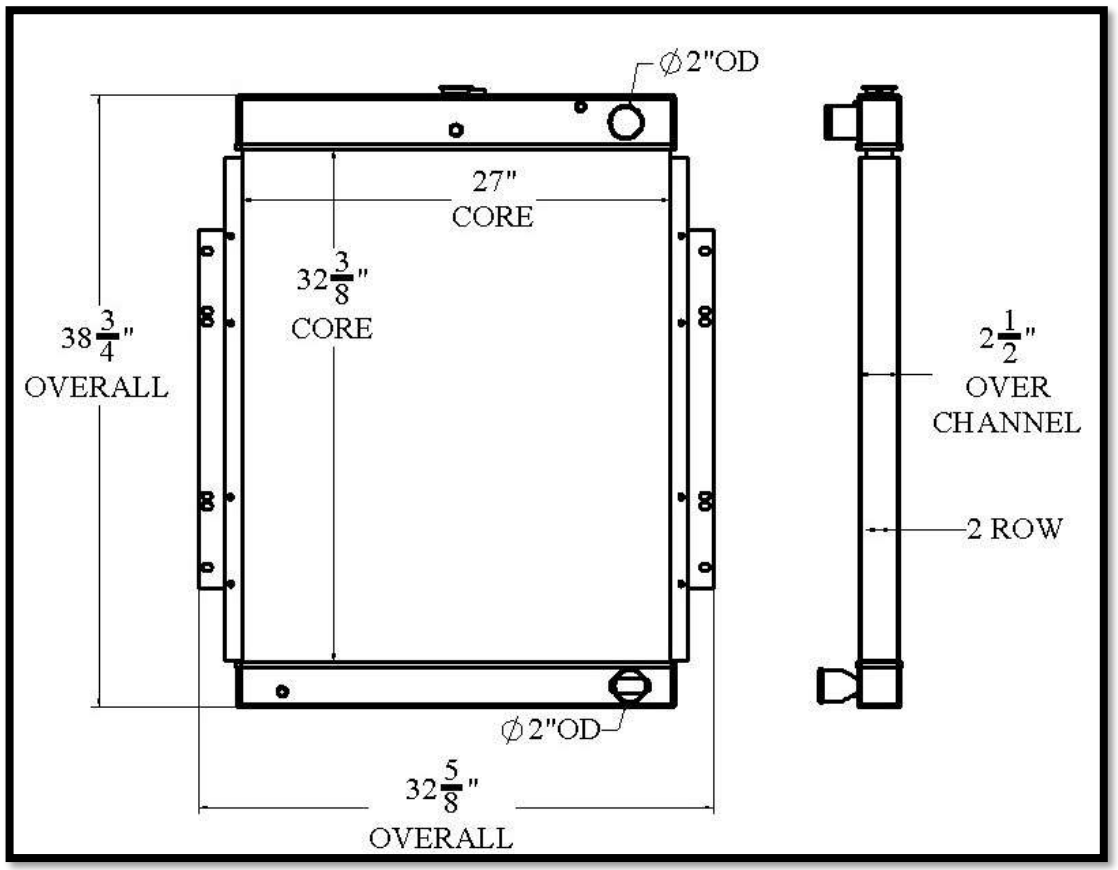

Overall Dimensions: 38-3/4 X 32-5/8” X 2-1/2”
Core: 38-3/4” X 32-5/8”” X 2 ROW
Inlet: 2” OD
Outlet: 2” OD

ST401

Listed dimensions may vary slightly from OE

ST402

BGR Part Number: ST-0403-5I-EF
56062/ 1033, 120-303

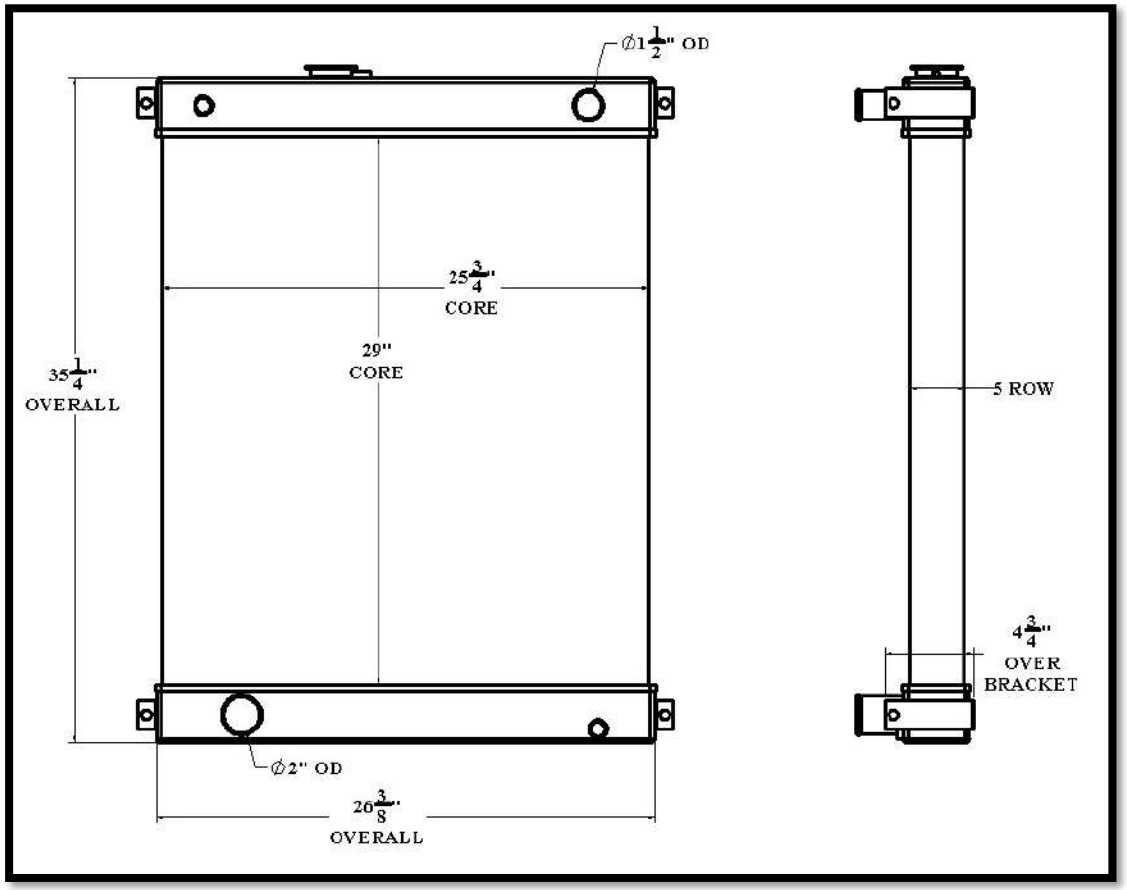

Overall Dimensions: 35-1/4” X 26-3/8” X 4-3/4”
Core: 29” X 25-3/4” X 5 ROW
Inlet: 1-1/2” OD
Outlet: 2” OD

Tel 1.800.774.2168
www.bgrradiator.com

BGR Part Number: ST-0404-4I-F

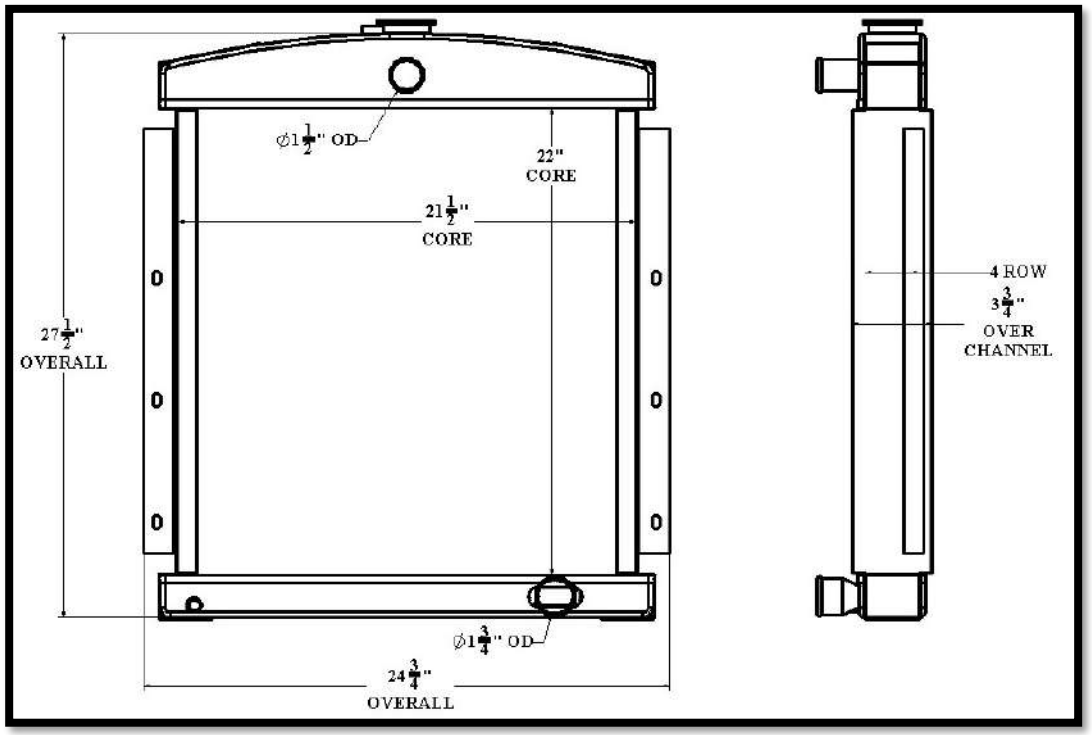

Overall Dimensions: 27-1/2” X 24-3/4” X 3-3/4”
Core: 22” X 21-1/2” X 4 ROW
Inlet: 1-1/2” OD
Outlet: 1-3/4” OD

Listed dimensions may vary slightly from OE

BGR Part Number: ST-0405-4I-NC
32000374 REV D

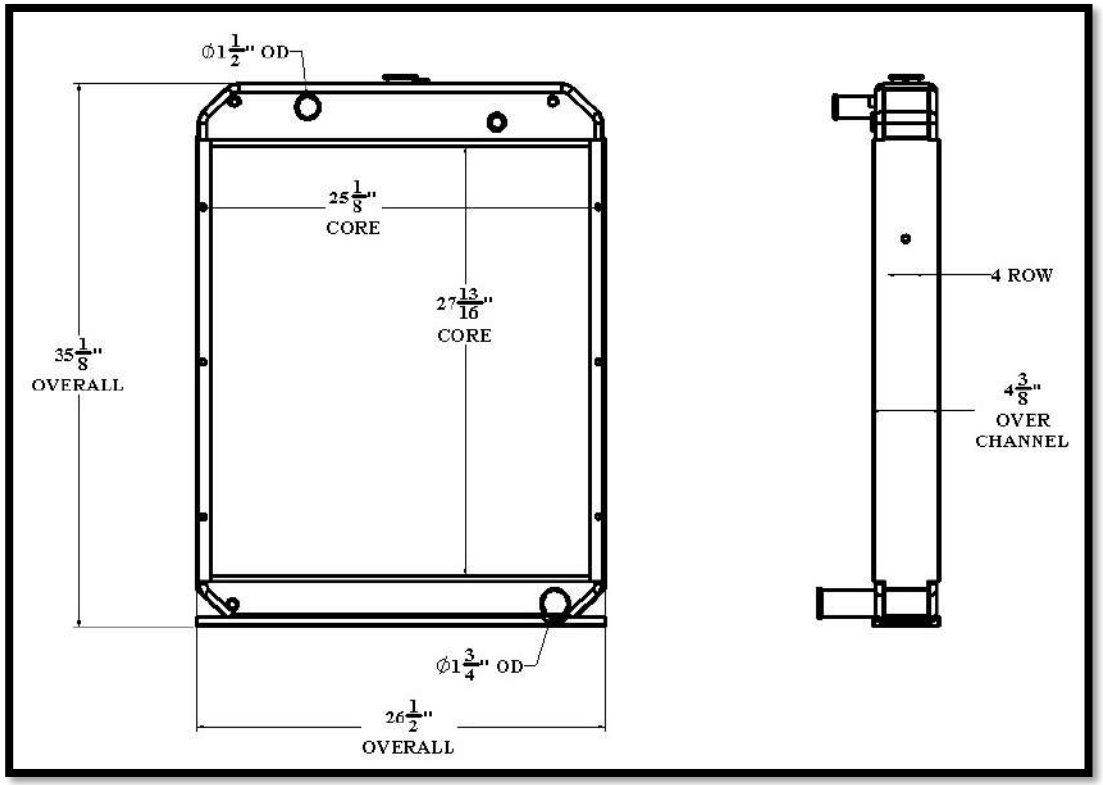

Overall Dimensions: 35-1/8” X 26-1/2” X 4-3/8”
Core: 27-13/16” X 25-1/8” X 4 ROW
Inlet: 1-1/2” OD
Outlet: 1-3/4” OD

Tel 1.800.774.2168
www.bgrradiator.com

BGR Part Number: ST-0406-5I-NC
CY0001A34, DR2677

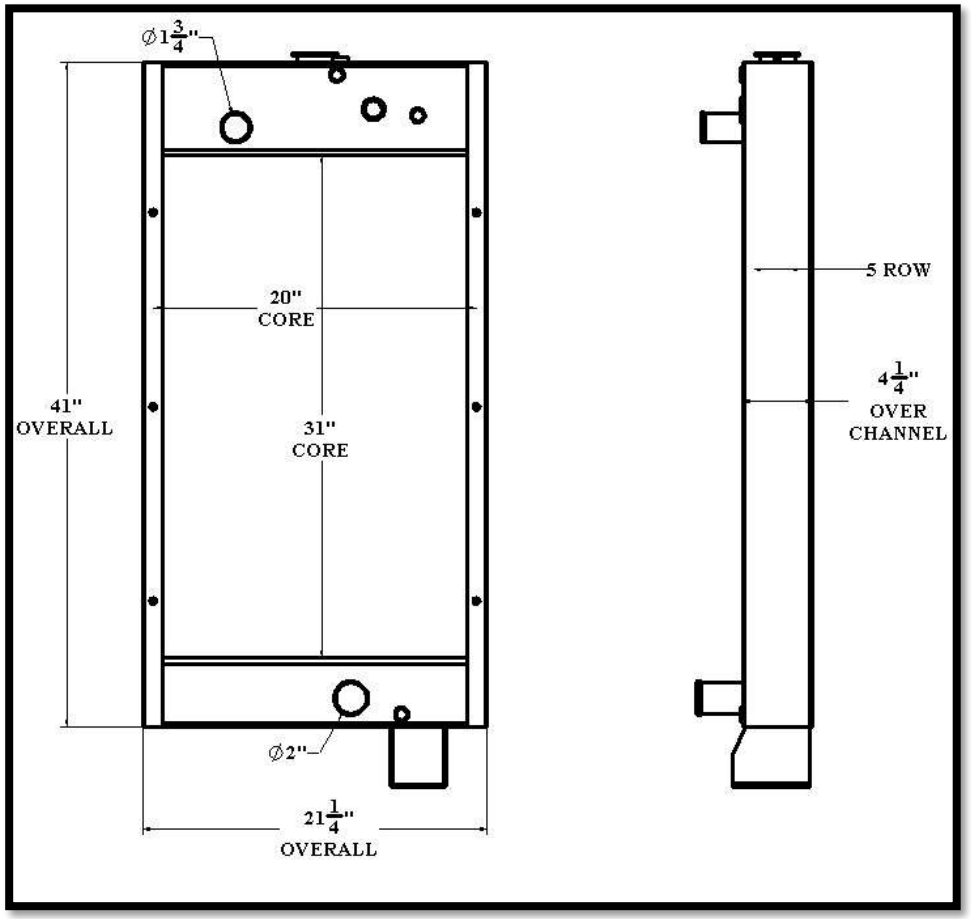

Overall Dimensions: 41” X 21-1/4” X 4-1/4”
Core: 31” X 20” X 5 ROW
Inlet: 1-3/4” OD
Outlet: 2” OD

Listed dimensions may vary slightly from OE

BGR Part Number: ST-0407-4I-B

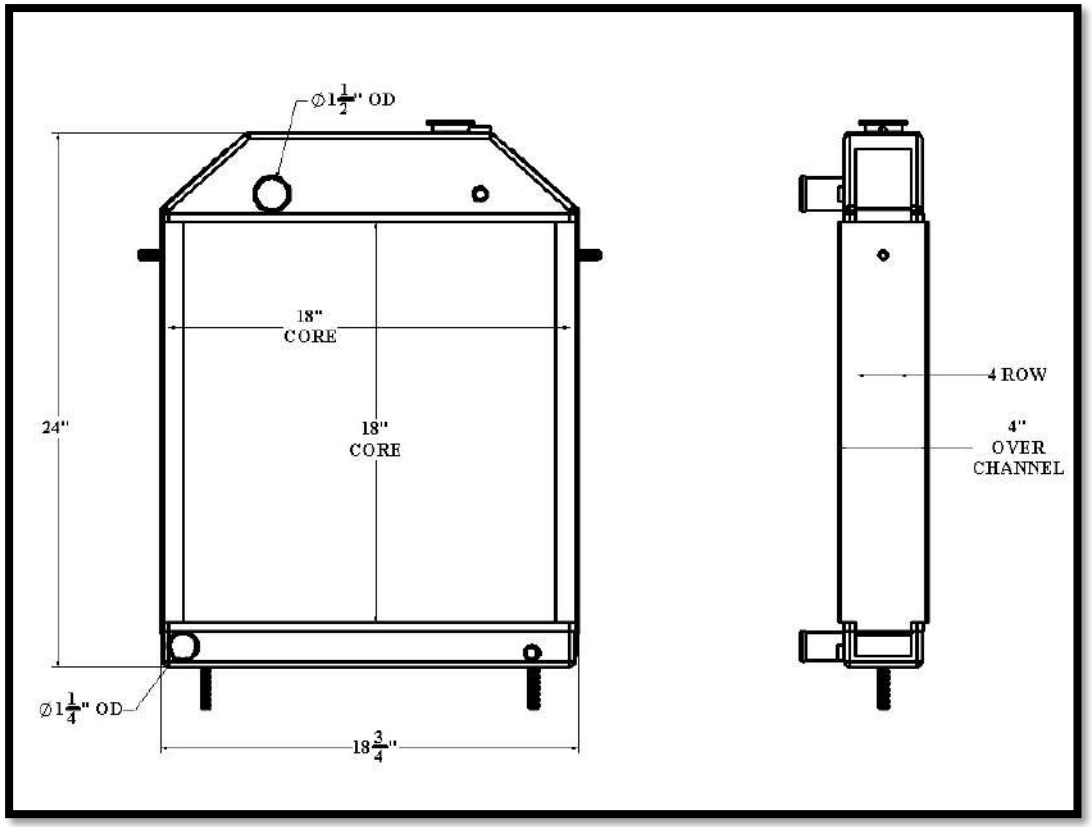

Overall Dimensions: 24” X 18-3/4” X 4”
Core: 18” X 18” X 4 ROW
Inlet: 1-1/2” OD
Outlet: 1-1/4” OD

Tel 1.800.774.2168
www.bgrradiator.com

BGR Part Number: ST-0408-4N-NC
A-343033, 1A17491

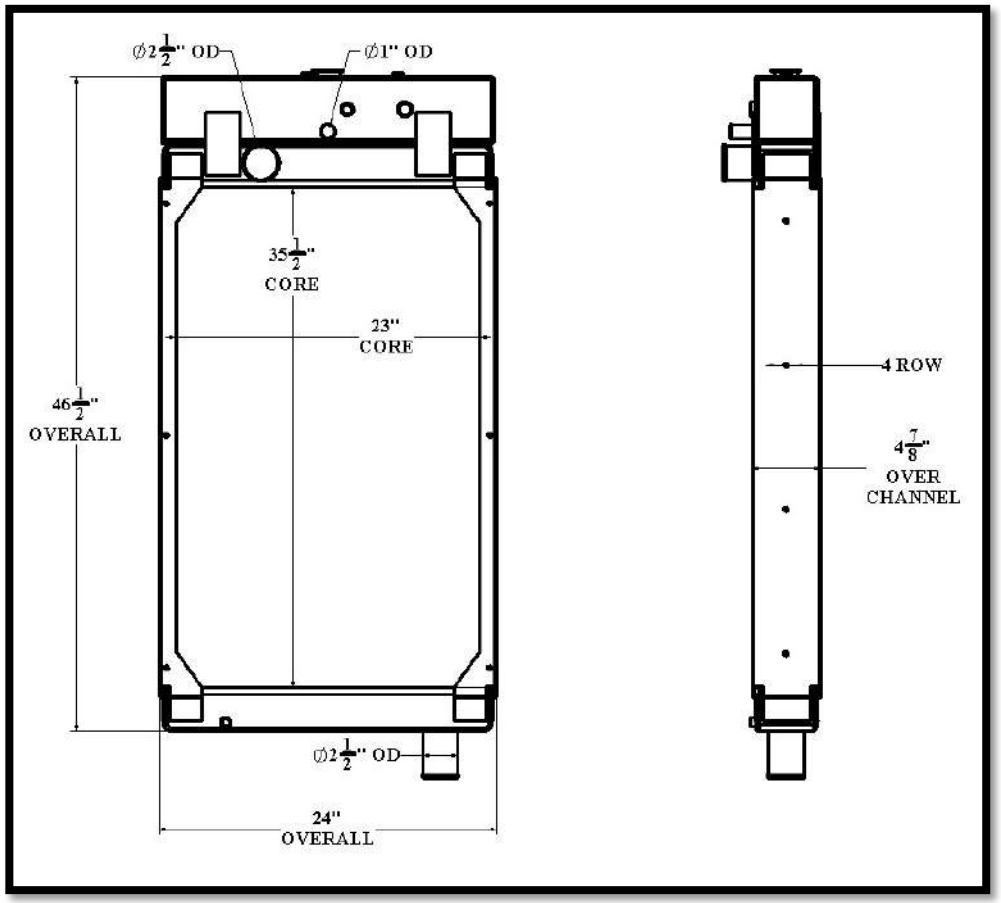

Overall Dimensions: 46-1/2” X 24” X 4-7/8”
Core: 35-1/2” X 23” X 4 ROW
Inlet: 2-1/2” OD, 1” OD
Outlet: 2-1/2” OD

Listed dimensions may vary slightly from OE

BGR Part Number: ST-0409-6I-NC
94796412, D100FP2Y

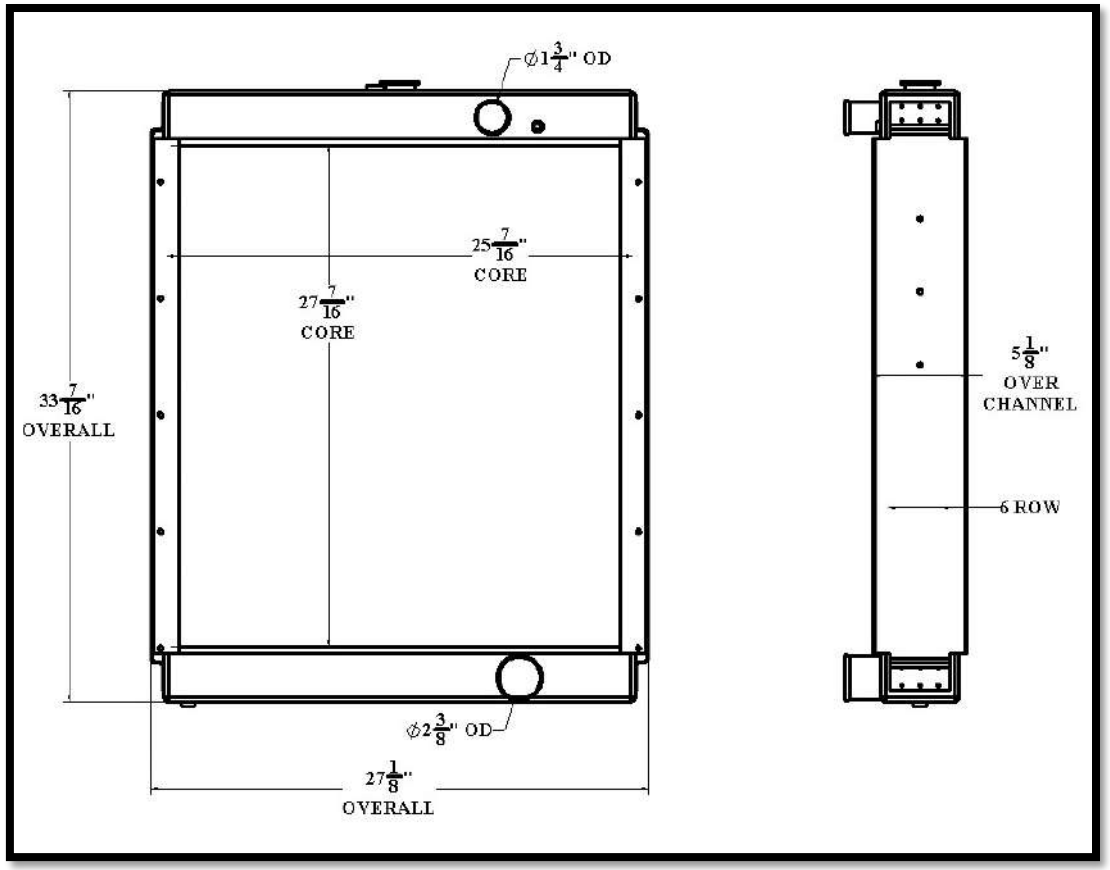

Overall Dimensions: 33-7/16” X 27-1/8” X 5-1/8”
Core: 27-7/16” X 25-7/16” X 6 ROW
Inlet: 1-3/4” OD
Outlet: 2-3/8” OD

Tel 1.800.774.2168
www.bgrradiator.com

BGR Part Number: ST-0410-7I-EF
MN124423-2411, MN122440-4430

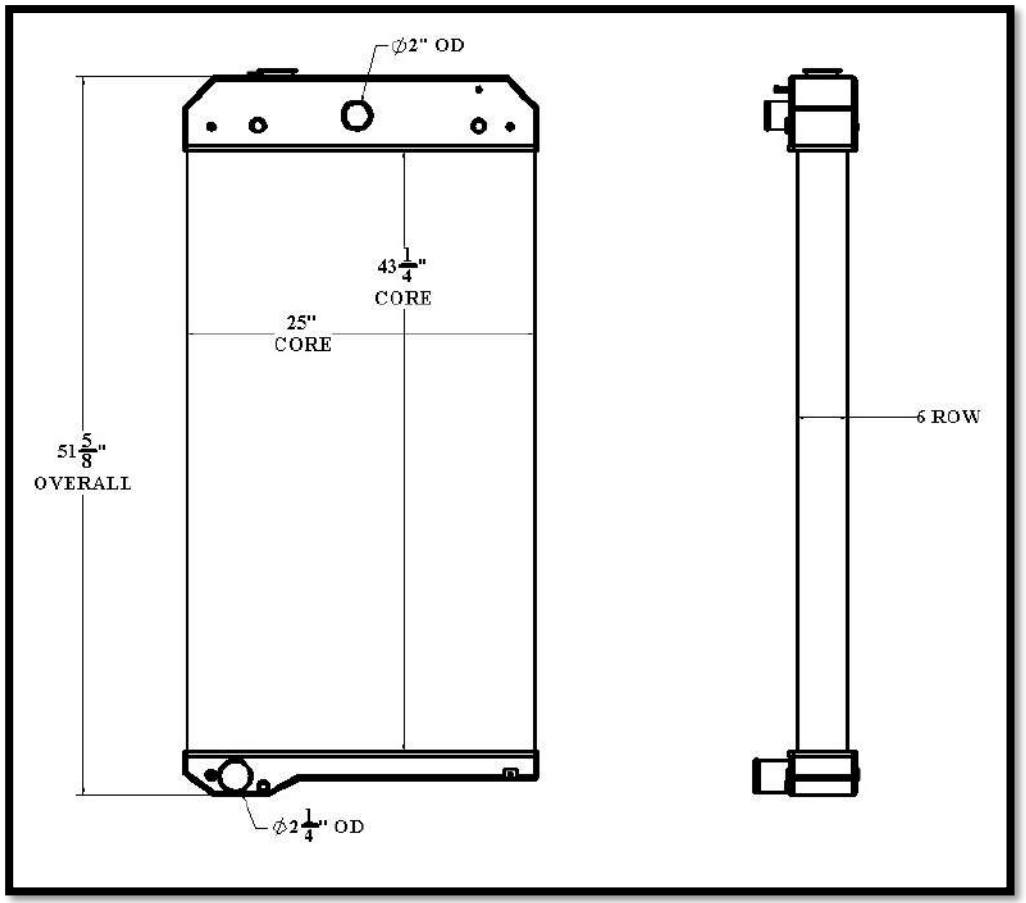

Overall Dimensions: 51-5/8” X 25”
Core: 43-1/4” X 25” X 6 ROW
Inlet: 2” OD
Outlet: 2-1/4” OD

Listed dimensions may vary slightly from OE

BGR Part Number: ST-0411-6I-NC
GM52731

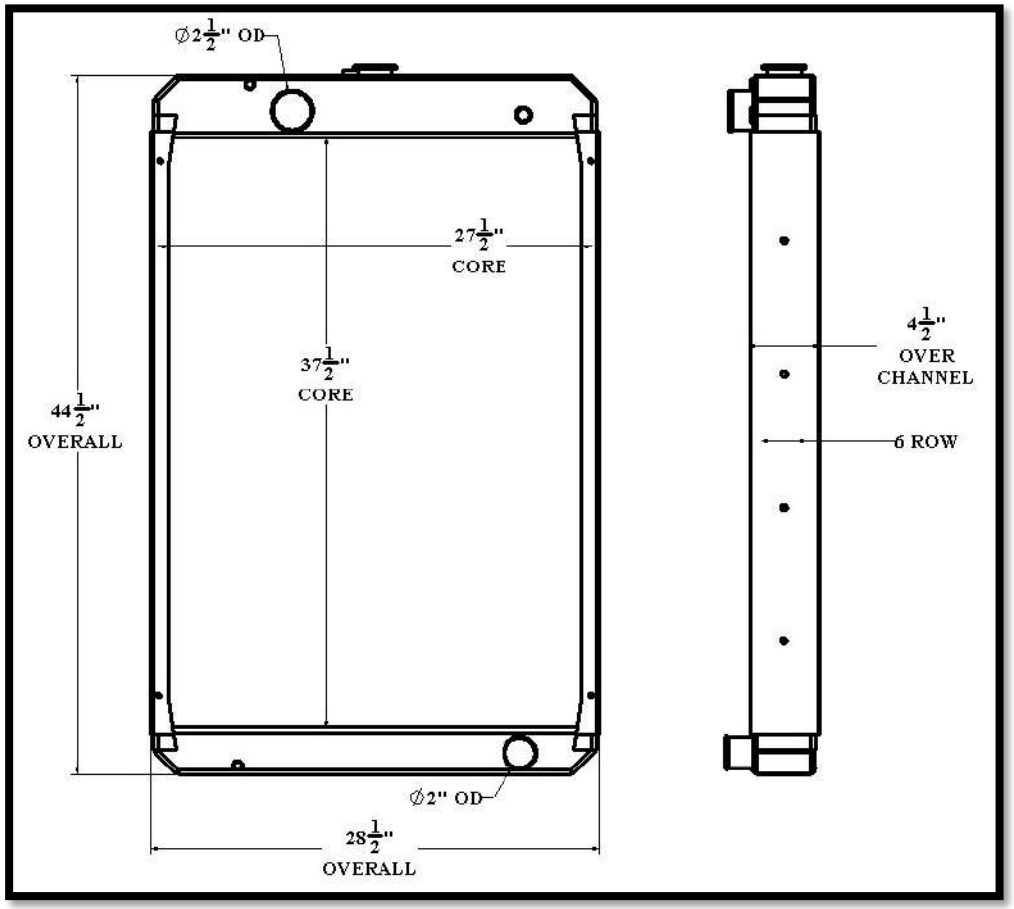

Overall Dimensions: 44-1/2” X 28-1/2” X 4-1/2”
Core: 37-1/2” X 27-1/2” X 6 ROW
Inlet: 2-1/2” OD
Outlet: 2” OD

Tel 1.800.774.2168
www.bgrradiator.com

BGR Part Number: ST-0412-5I-NC
32000306 REV A, SUA92132

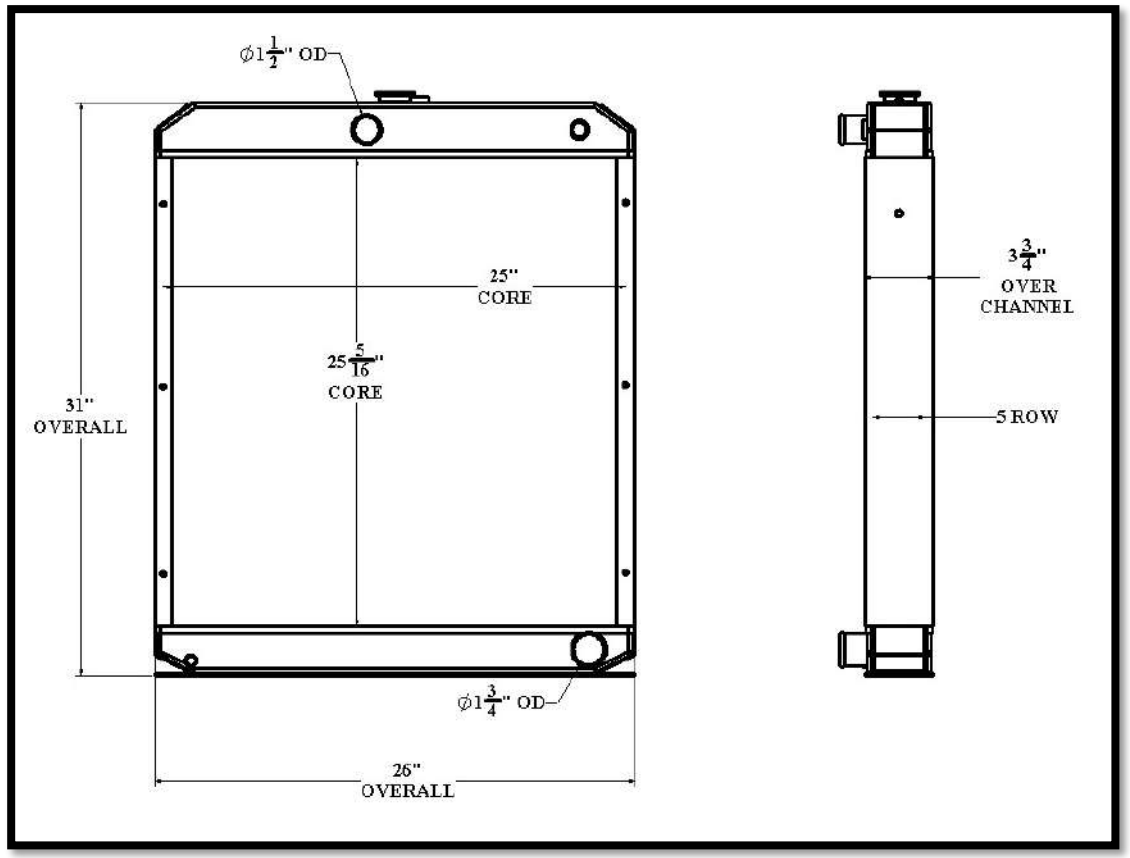

Overall Dimensions: 31” X 26” X 3-3/4”
Core: 25-5/16” X 25” X 6 ROW
Inlet: 1-1/2” OD
Outlet: 1-3/4” OD

Listed dimensions may vary slightly from OE

BGR Part Number: ST-0413-5I-NC
32000209

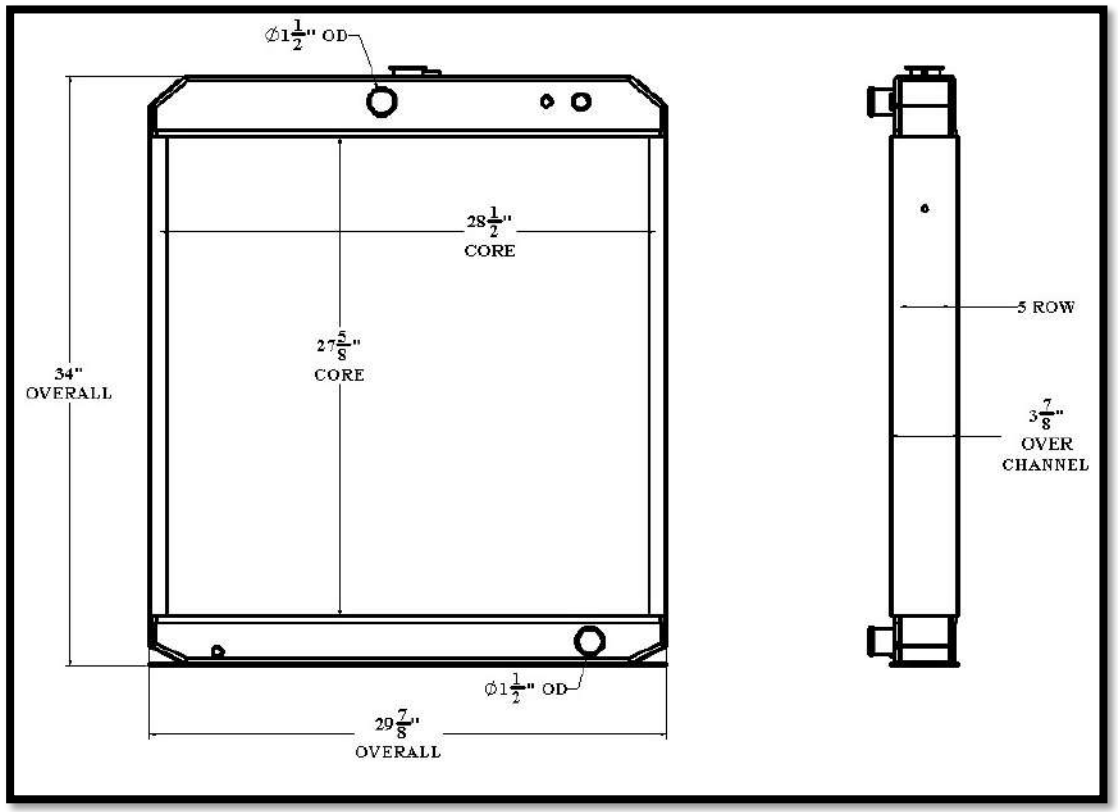

Overall Dimensions: 34” X 28-7/8” X 3-7/8”
Core: 27-5/8” X 28-1/2” X 5 ROW
Inlet: 1-1/2” OD
Outlet: 1-1/2” OD

Tel 1.800.774.2168
www.bgrradiator.com

BGR Part Number: ST-0414-5I-F

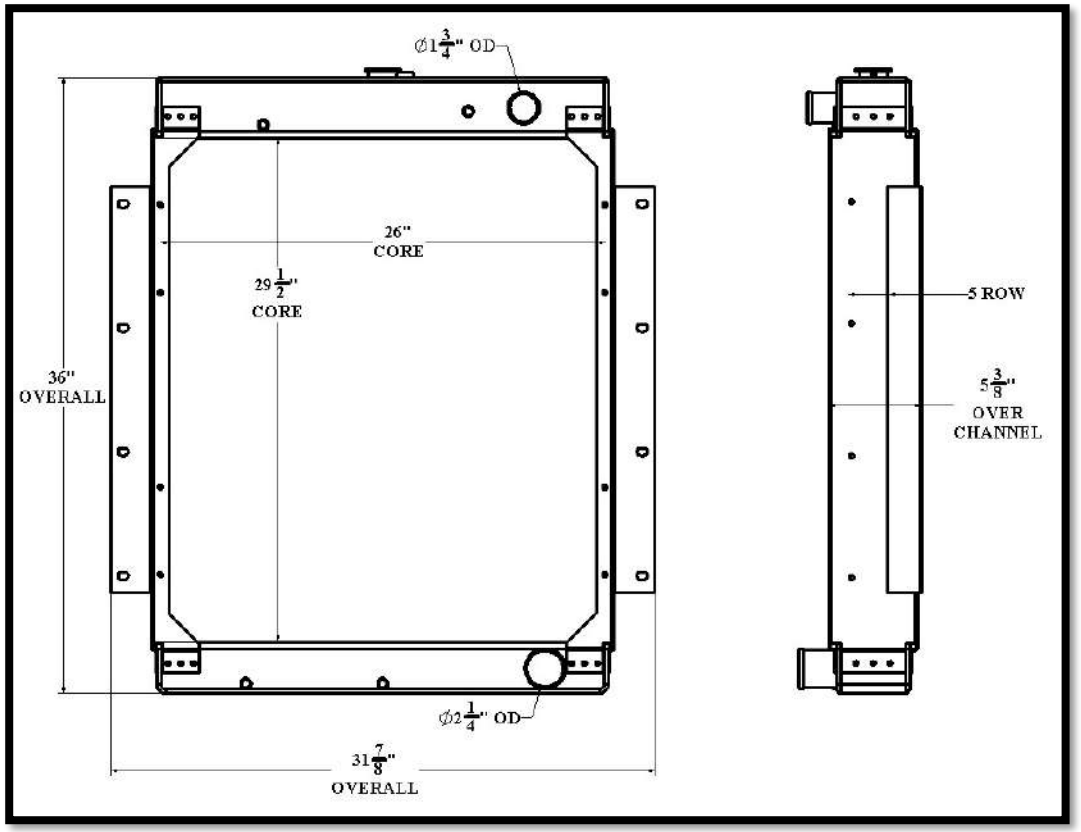

Overall Dimensions: 36” X 31-7/8” X 5-3/8”
Core: 29-1/2” X 26” X 5 ROW
Inlet: 1-3/4” OD
Outlet: 2-1/4” OD

ST413

Listed dimensions may vary slightly from OE

ST414

BGR Part Number: ST-0415-5I-NC
PSI

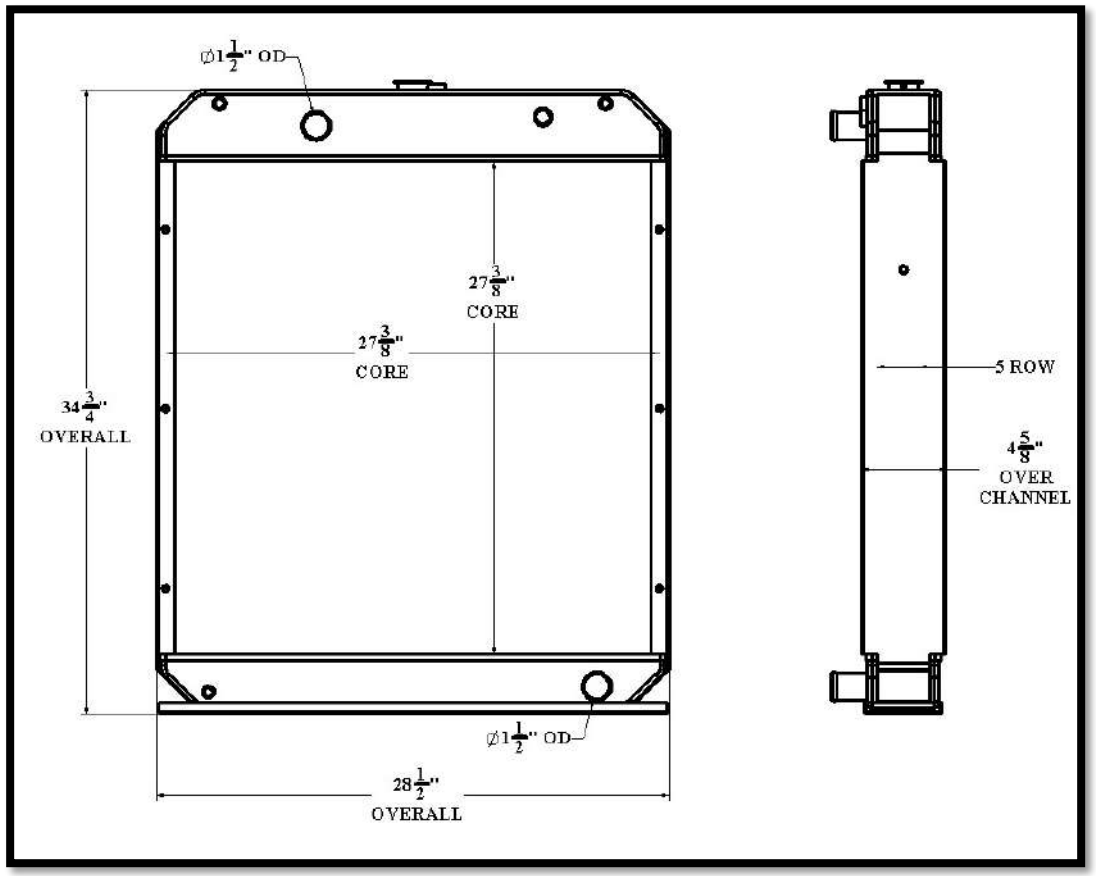

Overall Dimensions: 34-3/4” X 28-1/2” X 4-5/8”
Core: 27-3/8” X 27-3/8” X 5 ROW
Inlet: 1-1/2” OD
Outlet: 1-1/2” OD

Tel 1.800.774.2168
www.bgrradiator.com

BGR Part Number: ST-0416-5I-NC
BM11464

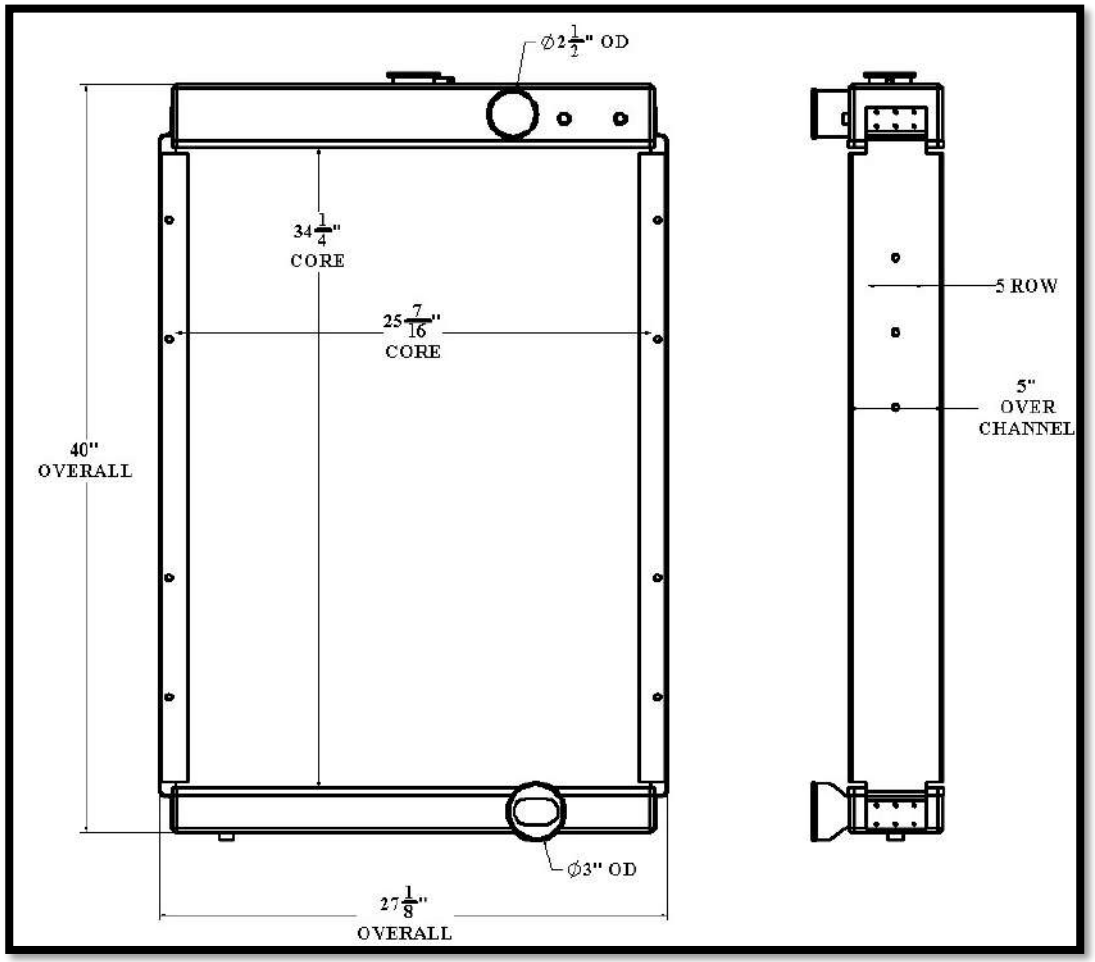

Overall Dimensions: 40” X 27-1/8” X 5”
Core: 34-1/4” X 25-7/16” X 5 ROW
Inlet: 2-1/2” OD
Outlet: 3” OD

Listed dimensions may vary slightly from OE

BGR Part Number: ST-0417-7I-NC
1A9702, 030478, AR76840, 015730

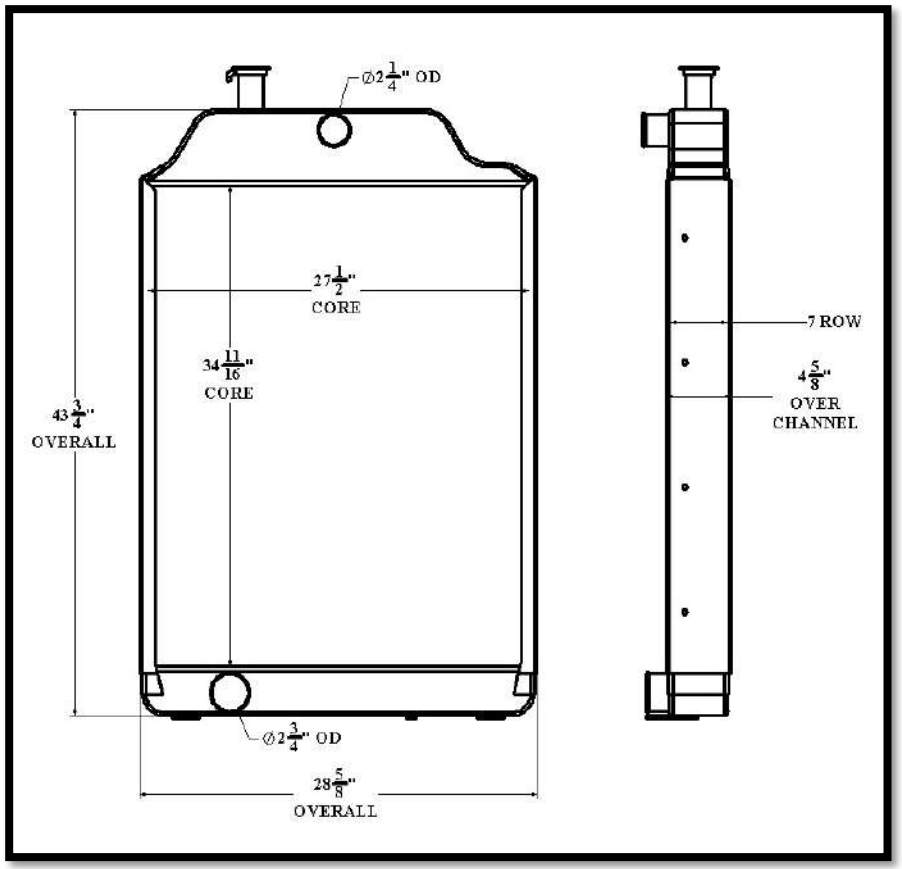

Overall Dimensions: 43-3/4” X 28-5/8” X 4-5/8”
Core: 34-11/16” X 27-1/2” X 7 ROW
Inlet: 2-1/4” OD
Outlet: 2-3/4” OD

Tel 1.800.774.2168
www.bgrradiator.com

BGR Part Number: ST-0418-5I-NC
A-352521

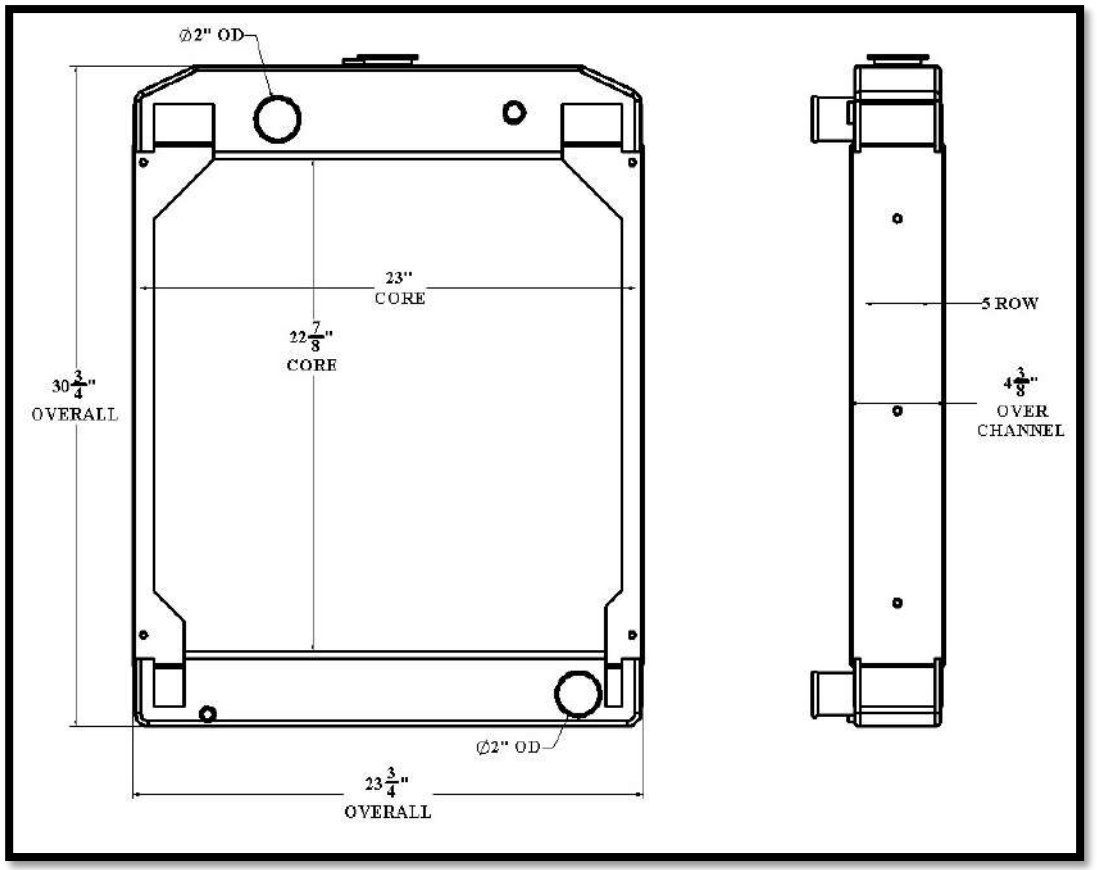

Overall Dimensions: 34-3/4” X 23-3/4” X 4-3/8”
Core: 22-7/8” X 23” X 5 ROW
Inlet: 2” OD
Outlet: 2” OD

ST417

Listed dimensions may vary slightly from OE

ST418

BGR Part Number: ST-0419-5I-NC
A-273433

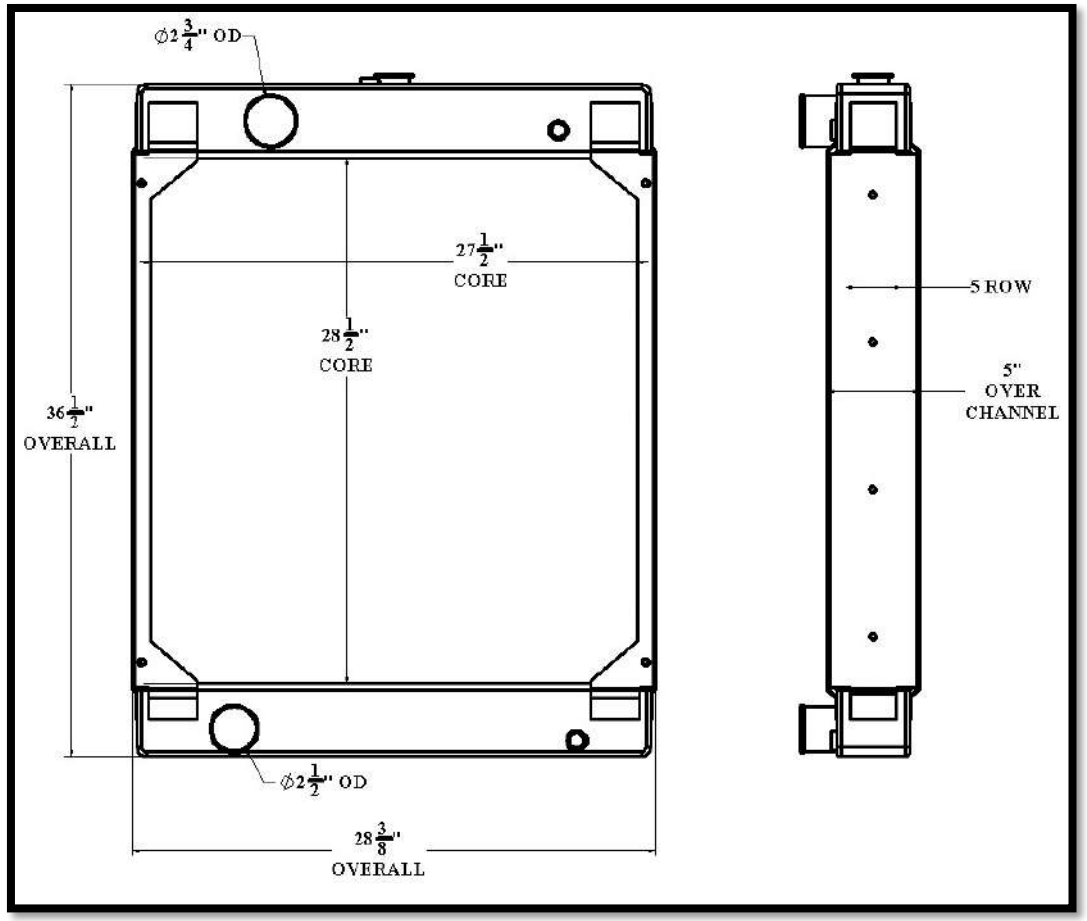

Overall Dimensions: 36-1/2” X 28-3/8” X 5”
Core: 28-1/2” X 27-1/2” X 5 ROW
Inlet: 2-3/4” OD
Outlet: 2-1/2” OD

Tel 1.800.774.2168
www.bgrradiator.com

BGR Part Number: ST-0420-5I-NC

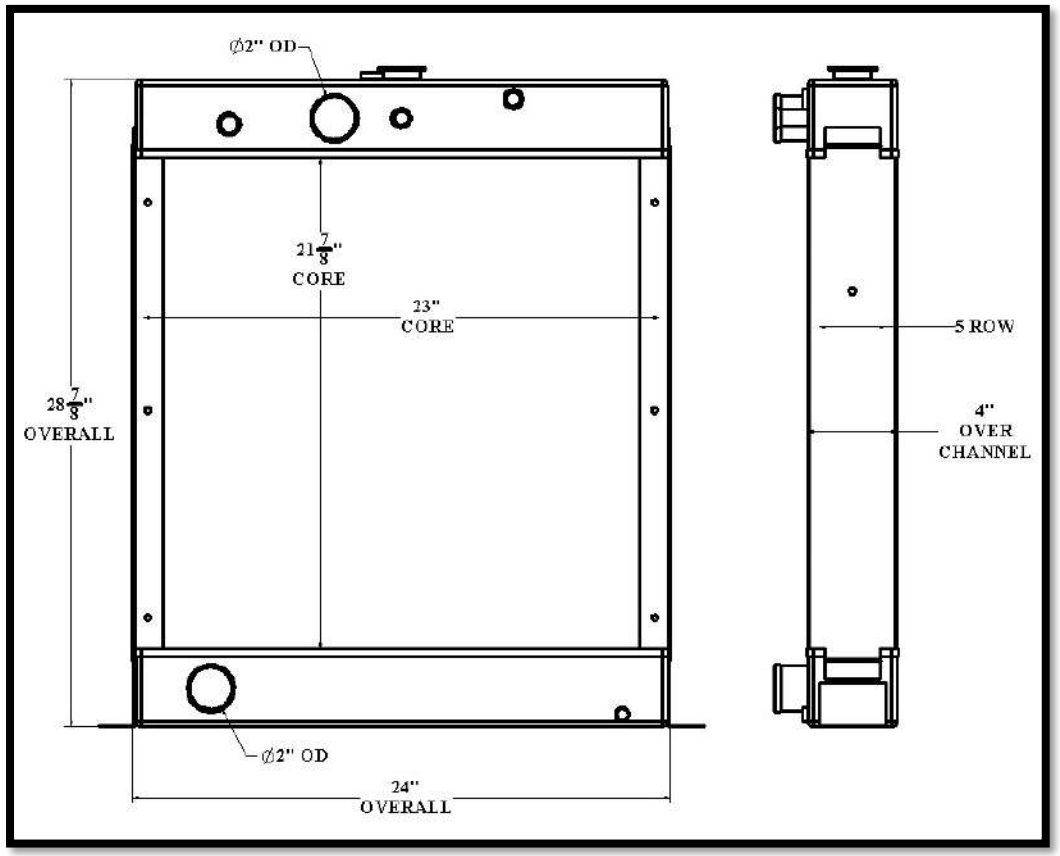

Overall Dimensions: 28-7/8” X 24” X 4”
Core: 21-7/8” X 23” X 5 ROW
Inlet: 2” OD
Outlet: 2” OD

ST419

Listed dimensions may vary slightly from OE

ST420

BGR Part Number: ST-0421-5I-NC

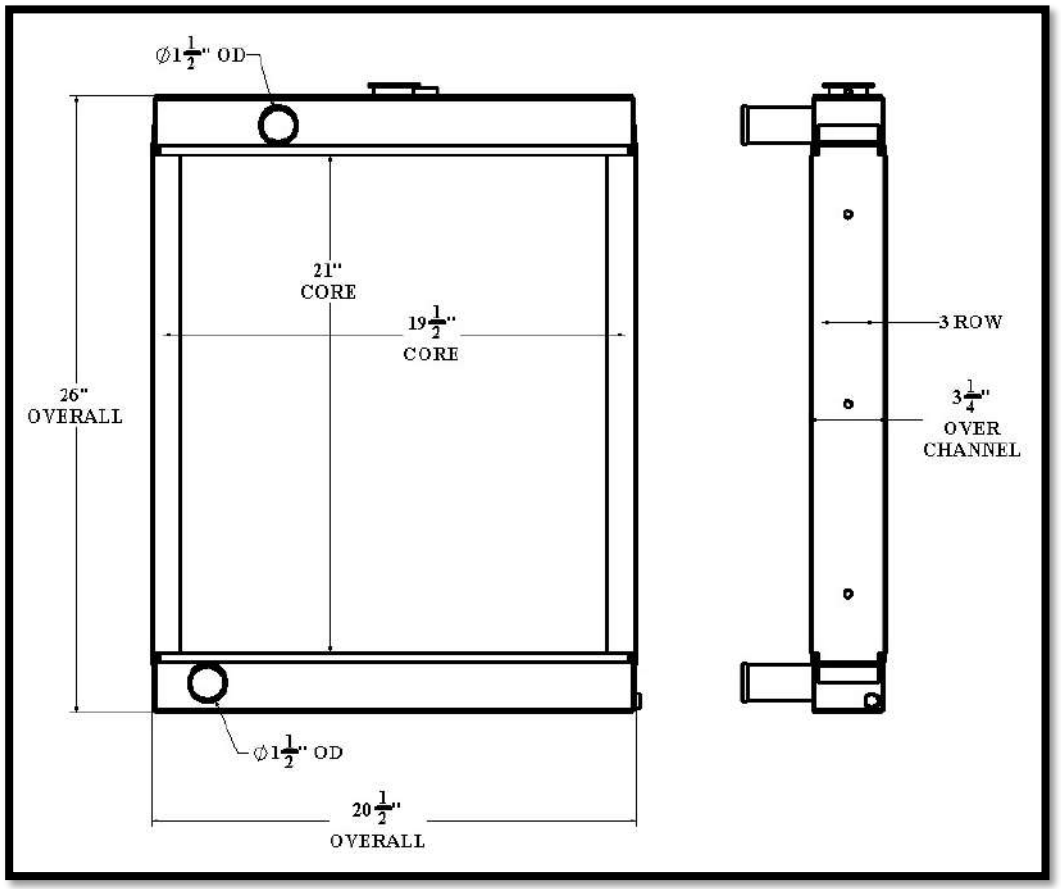

Overall Dimensions: 26” X 20-1/2” X 3-1/4”
Core: 21” X 19-1/2” X 3 ROW
Inlet: 1-1/2” OD
Outlet: 1-1/2” OD

ST421

Tel 1.800.774.2168
www.bgrradiator.com

BGR Part Number: ST-0422-4I-NC
D9JL-B

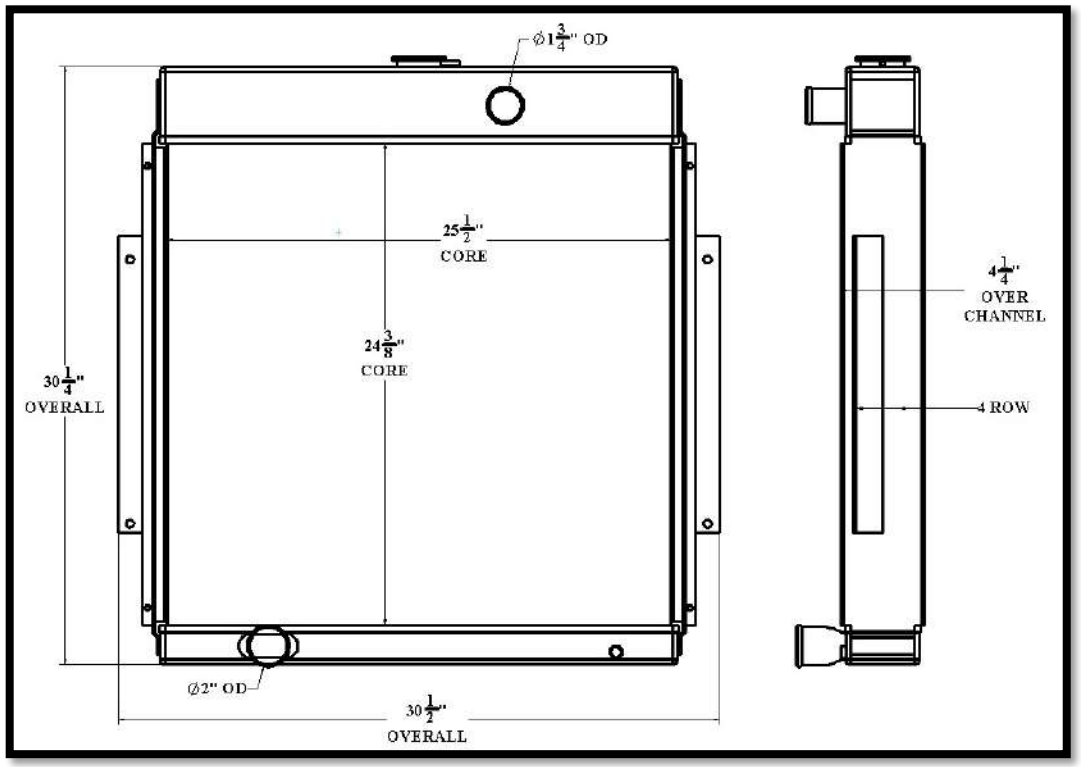

Overall Dimensions: 30-1/4” X 30-1/2” X 4-1/4”
Core: 24-3/8” X 25-1/2” X 4 ROW
Inlet: 1-3/4” OD
Outlet: 2” OD

ST422

Listed dimensions may vary slightly from OE

BGR Part Number: ST-0423-3I-F
130-5996-02

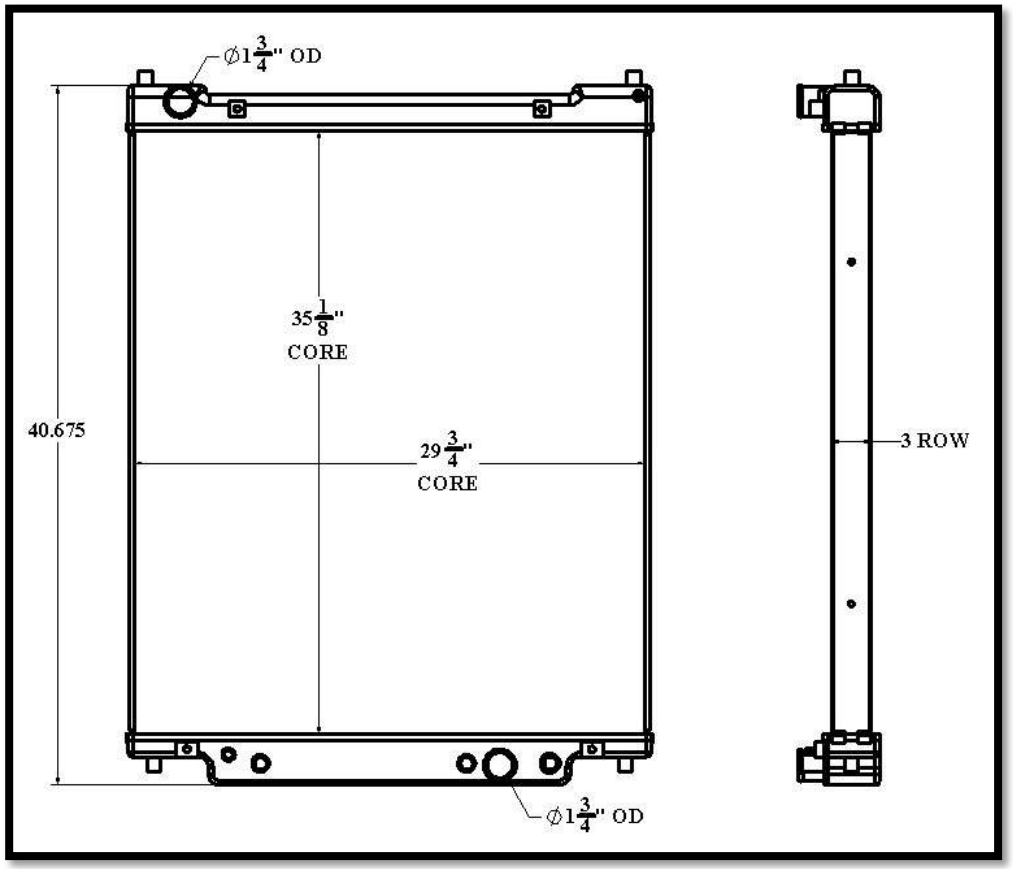

Overall Dimensions: 40.675” X 29-3/4”
Core: 35-1/8” X 29-3/4” X 3 ROW
Inlet: 1-3/4” OD
Outlet: 1-3/4” OD

Tel 1.800.774.2168
www.bgrradiator.com

BGR Part Number: ST-0424-5I-NC
3909836

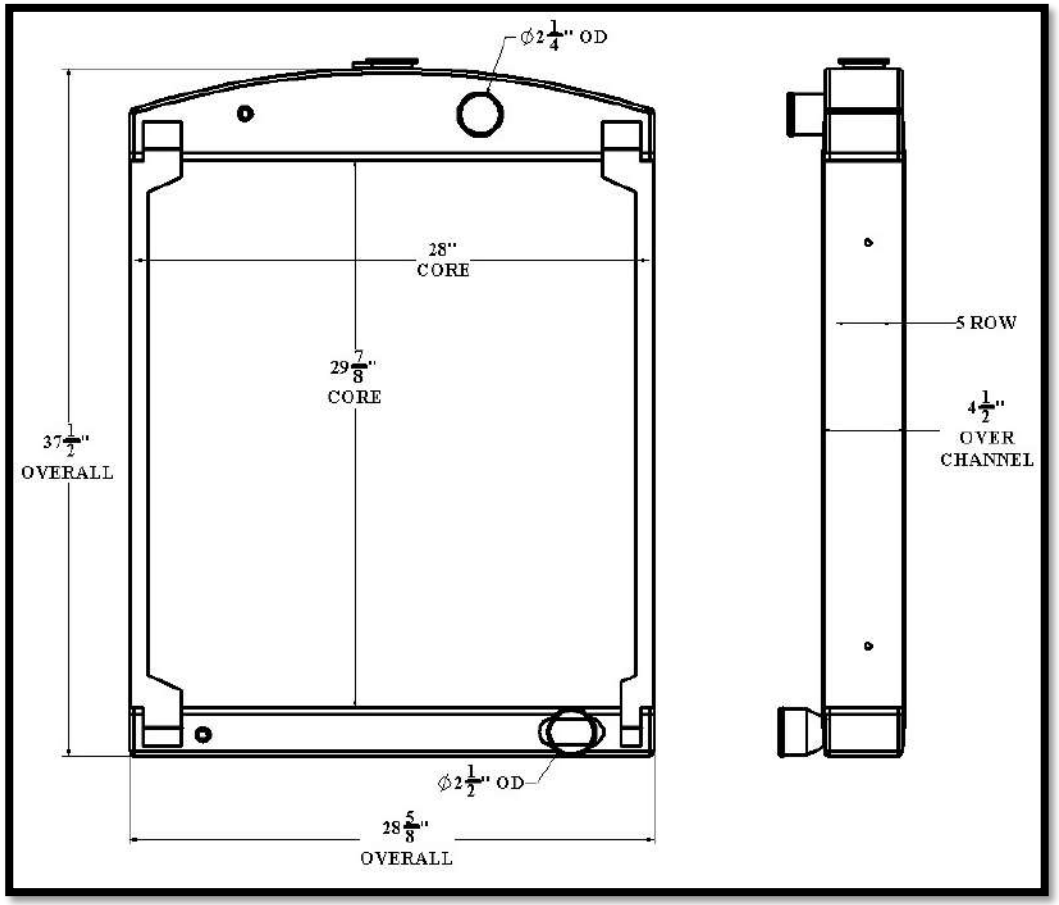

Overall Dimensions: 37-1/2” X 28-5/8” X 4-1/2”
Core: 29-7/8” X 28” X 5 ROW
Inlet: 2-1/4” OD
Outlet: 2-1/2” OD

ST423

Listed dimensions may vary slightly from OE

ST424

BGR Part Number: ST-0425-5R-NC

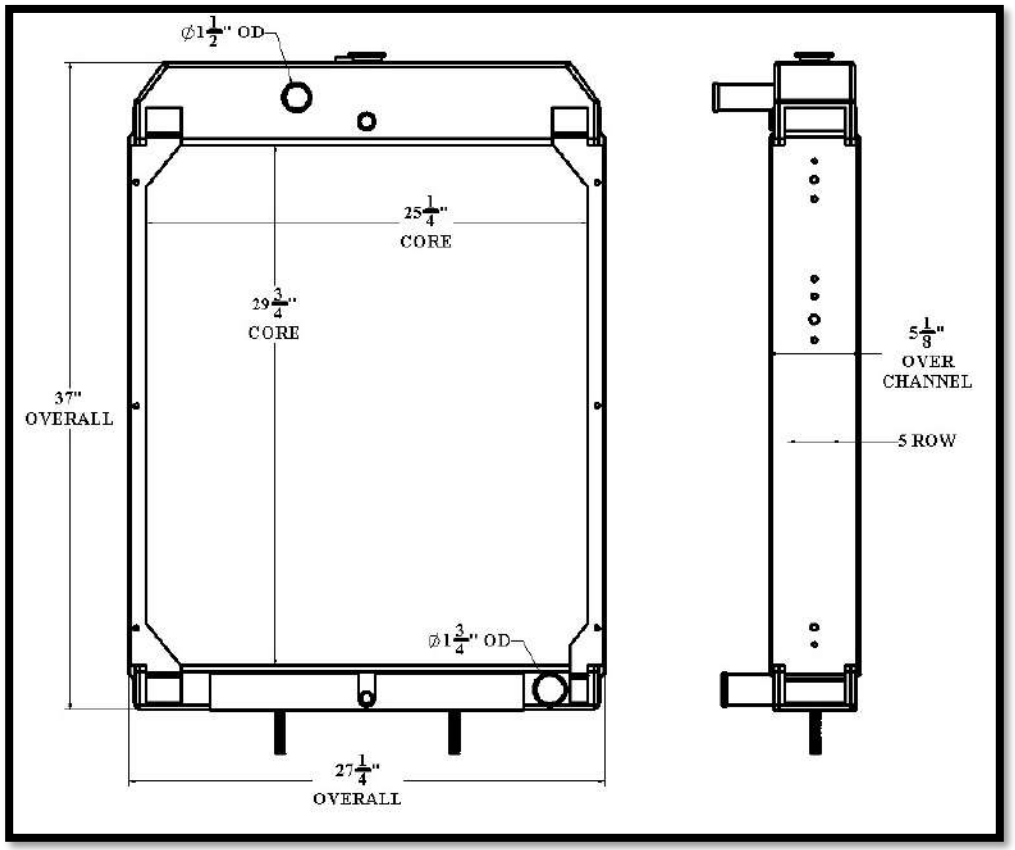

Overall Dimensions: 37” X 27-1/4” X 5-1/8”
Core: 29-3/4” X 25-1/4” X 5 ROW
Inlet: 1-1/2” OD
Outlet: 1-3/4” OD

Tel 1.800.774.2168
www.bgrradiator.com

BGR Part Number: ST-0426-3I-EF

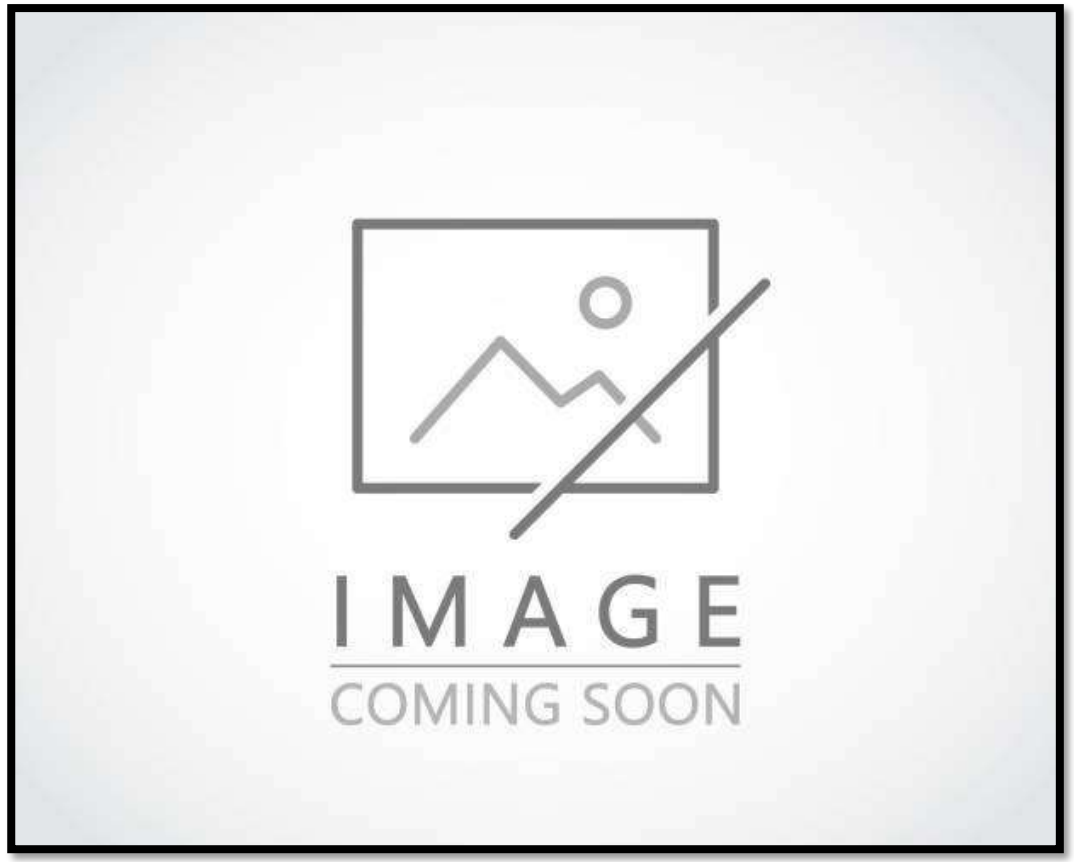

Overall Dimensions:
Core:
Inlet:
Outlet:

Listed dimensions may vary slightly from OE

BGR Part Number: ST-0427-4I-B
120-039, 120-546

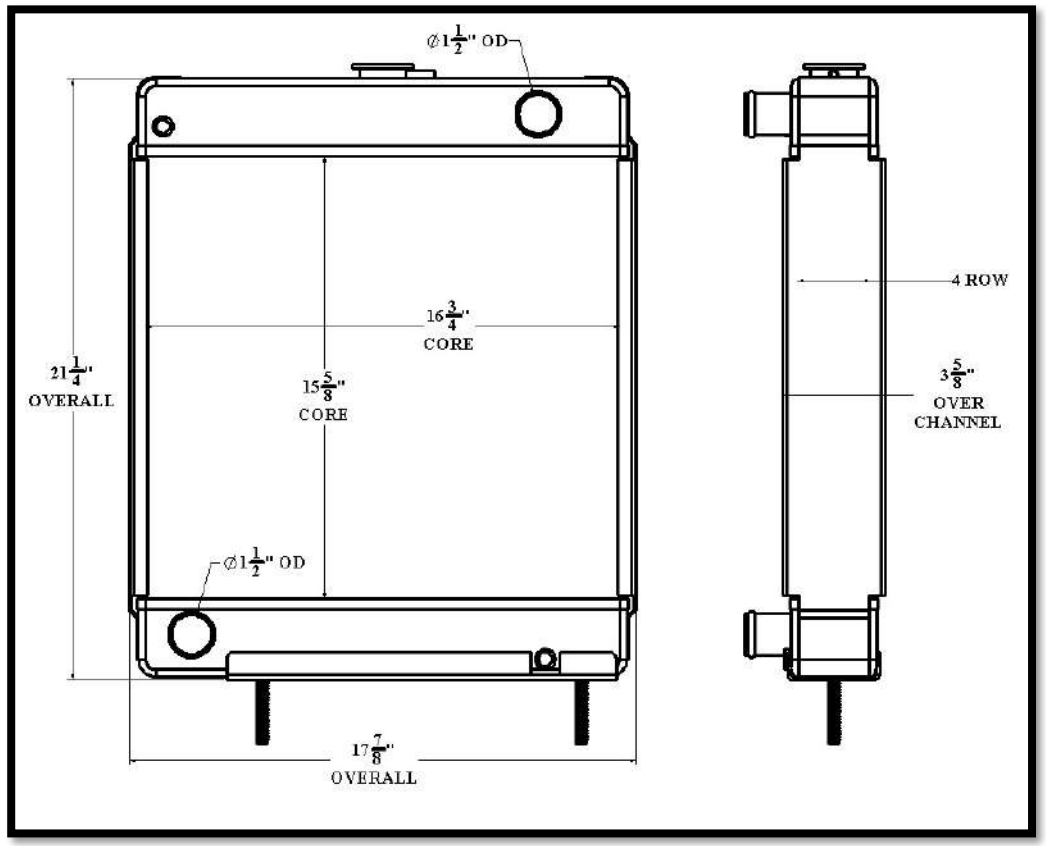

Overall Dimensions: 21-1/4” X 17-7/8” X 3-5/8”
Core: 15-5/8” X 16-3/4” X 4 ROW
Inlet: 1-1/2” OD
Outlet: 1-1/2” OD

Tel 1.800.774.2168
www.bgrradiator.com

BGR Part Number: ST-0428-2I-NC
RS7742R, 105393

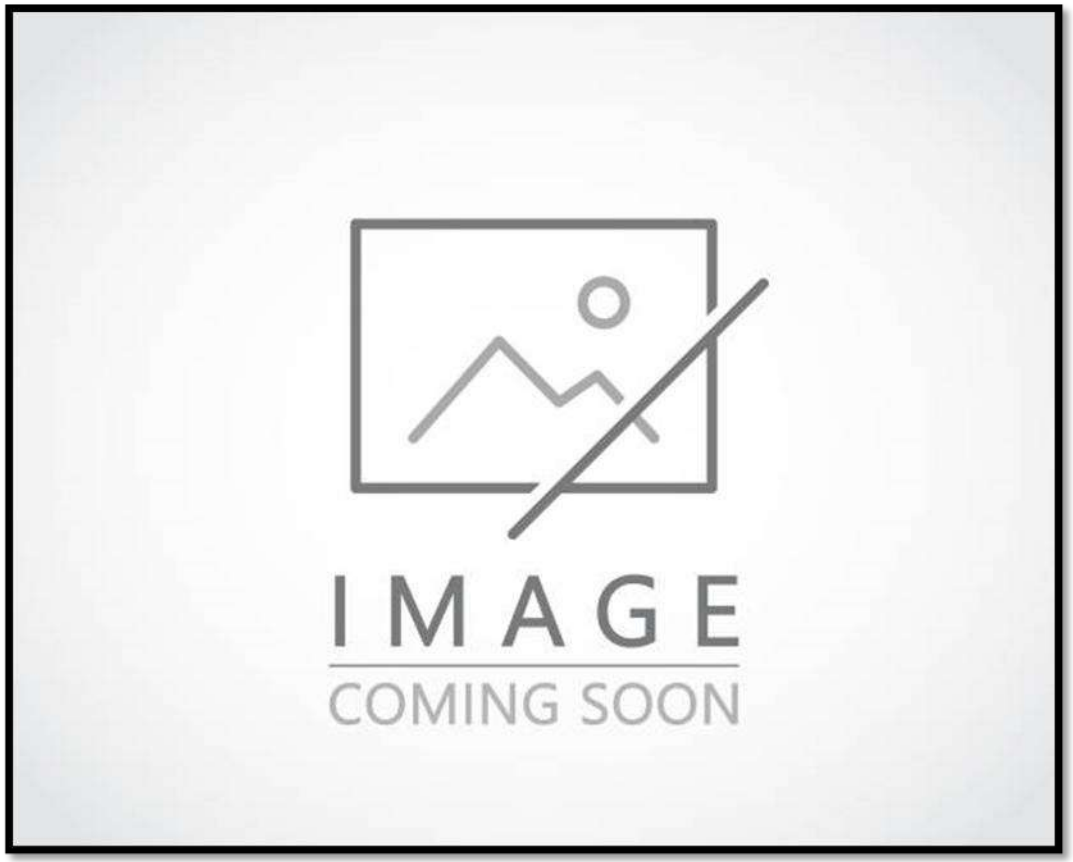

Overall Dimensions:
Core:
Inlet:
Outlet:

Listed dimensions may vary slightly from OE

BGR Part Number: ST-0429-7I-NC

RS6723, 27675

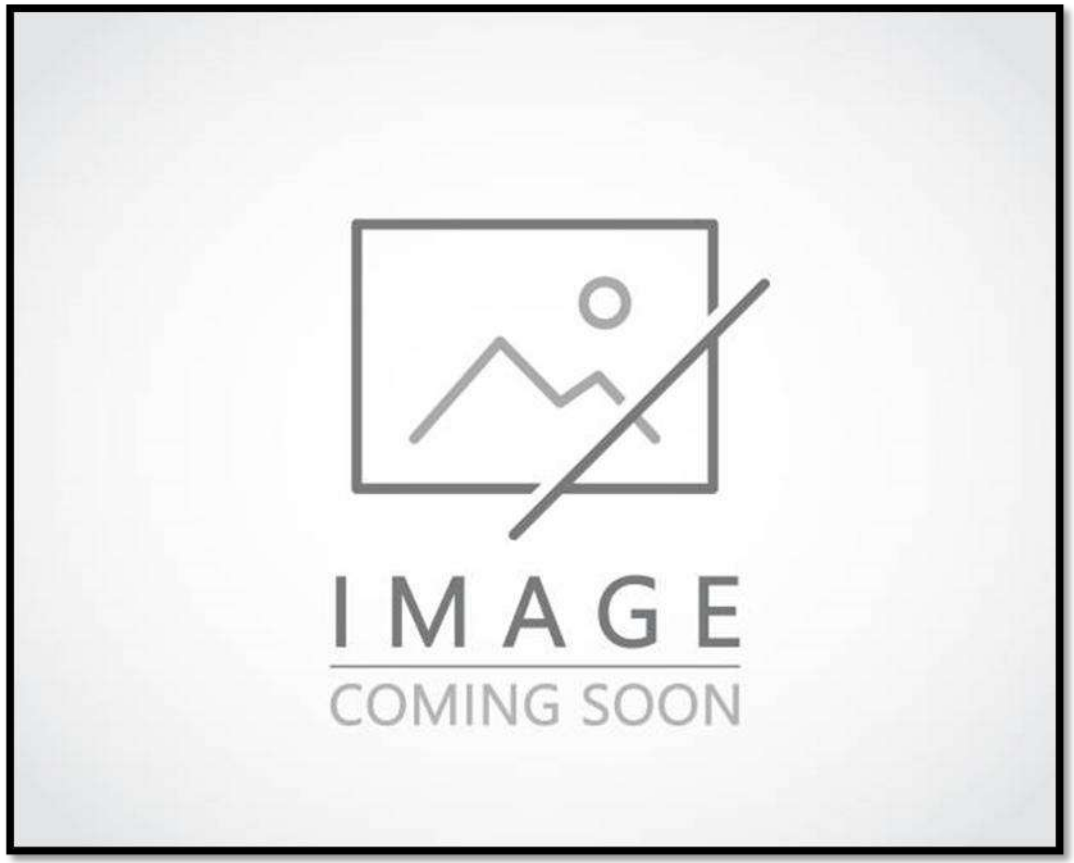

Overall Dimensions:

Core:

Inlet:

Outlet:

Tel 1.800.774.2168
www.bgrradiator.com

BGR Part Number: ST-0430-5M-NC

130-3772

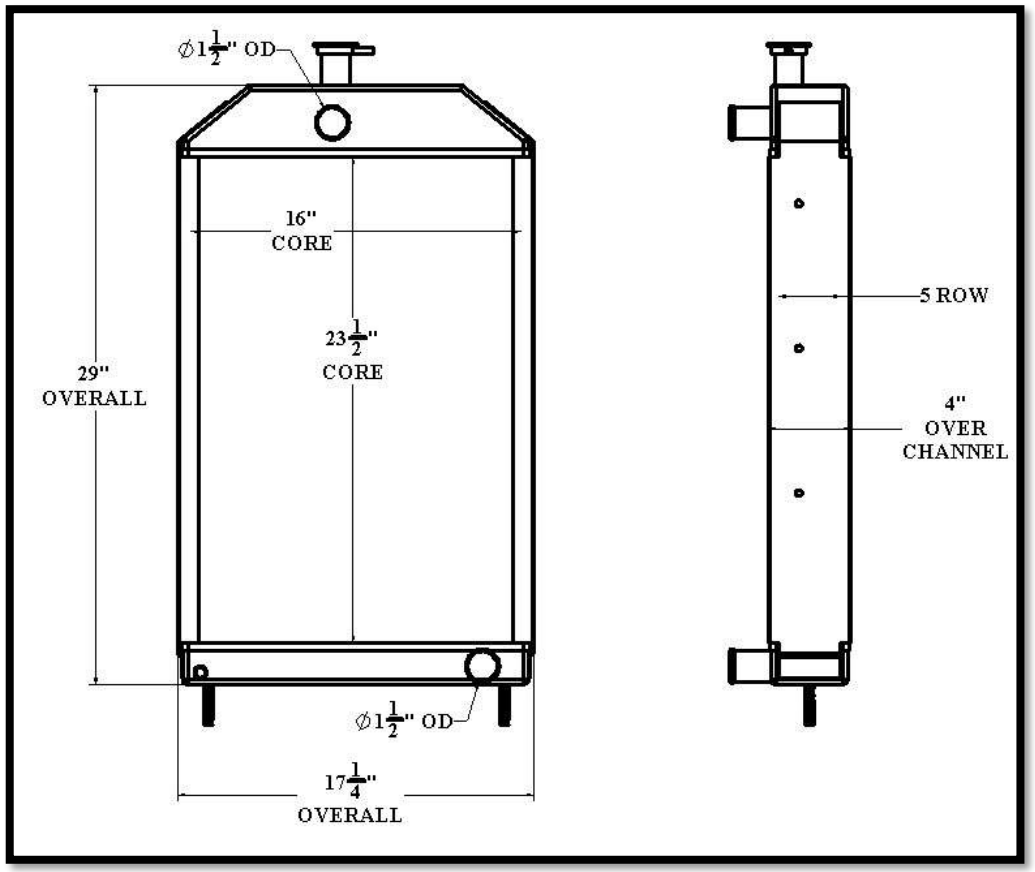

Overall Dimensions: 29” X 17-1/4” X 4”

Core: 23-1/4” X 16” X 5 ROW

Inlet: 1-1/2” OD

Outlet: 1-1/2” OD

Listed dimensions may vary slightly from OE

BGR Part Number: ST-0431-4M-NC
GM29696 GM29697, GM29698, GM35307, GM52729, GM52730 UNIVERSAL FIT

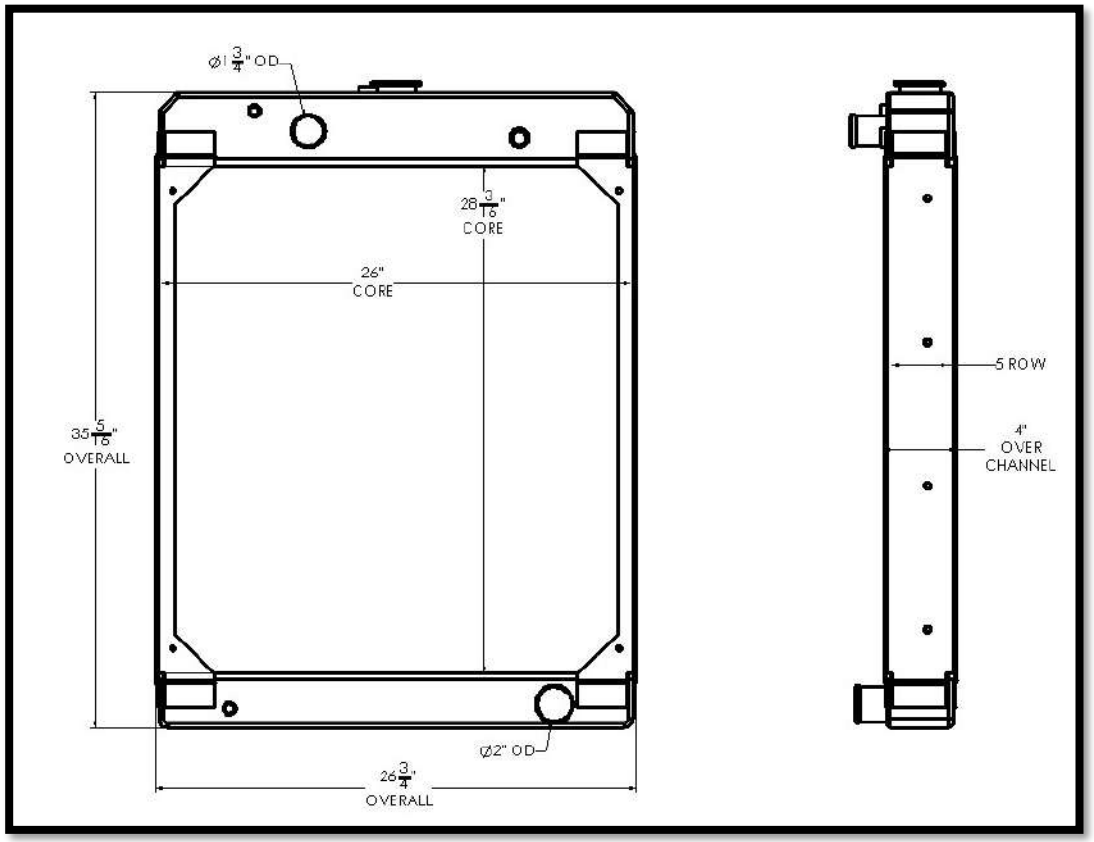

Overall Dimensions: 35-5/16” X 26-3/4” X 4”
Core: 28-3/16” X 25-15/16” X 4 ROW
Inlet: 1-3/4”OD
Outlet: 2”OD

Tel 1.800.774.2168
www.bgrradiator.com

BGR Part Number: ST-0432-4M-NC
GENERAC

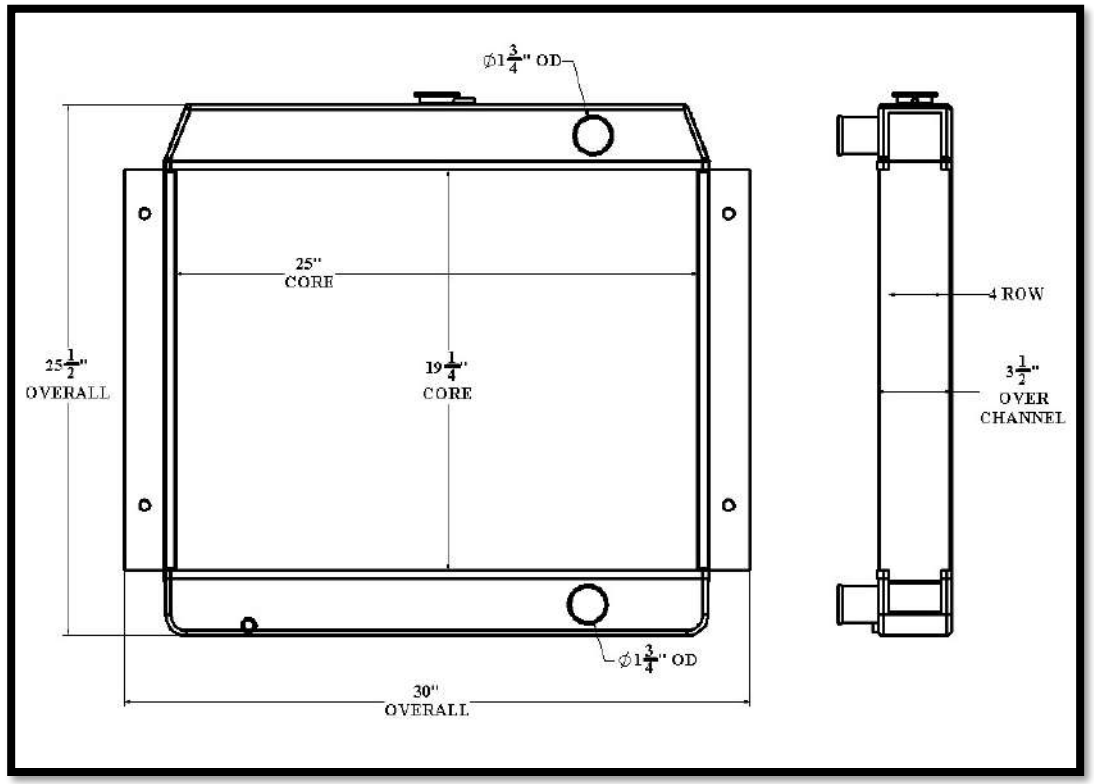

Overall Dimensions: 25-1/2” X 30” X 3-1/2”
Core: 19-1/4” X 25” X 4 ROW
Inlet: 1-3/4” OD
Outlet: 1-3/4” OD

ST431

Listed dimensions may vary slightly from OE

ST432

BGR Part Number: ST-0433-3M-EF

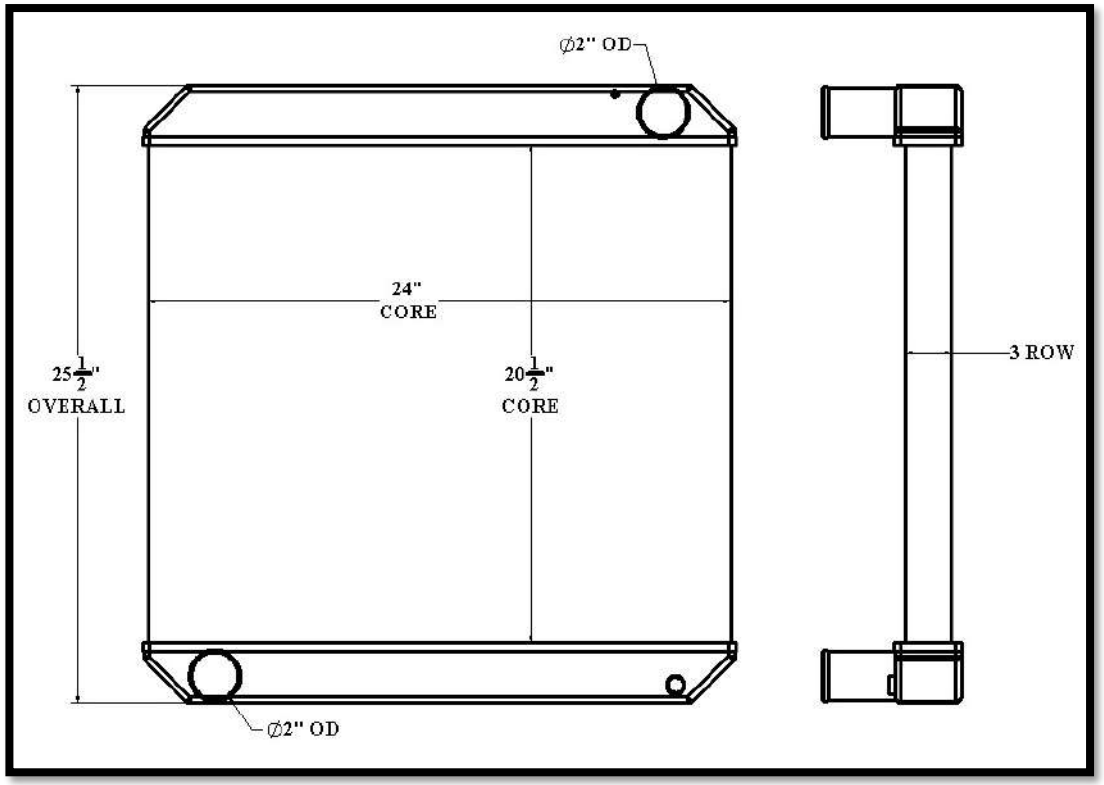

Overall Dimensions: 25-1/2” X 24”
Core: 24” X 20-1/2” X 3 ROW
Inlet: 2” OD
Outlet: 2” OD

Tel 1.800.774.2168
www.bgrradiator.com

BGR Part Number: ST-0434-3M-F
0E9837B, A0001231264

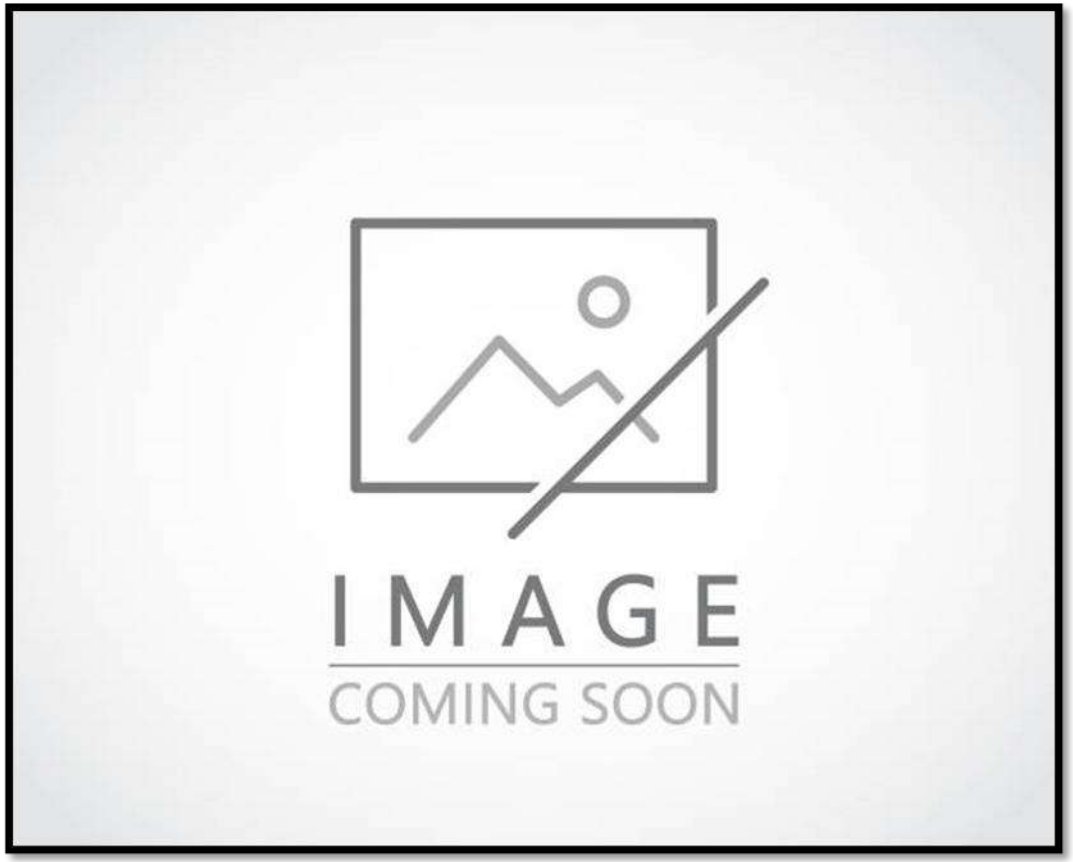

Overall Dimensions:
Core:
Inlet:
Outlet:

Listed dimensions may vary slightly from OE

BGR Part Number: ST-0435-5M-NC
C4910010000, C491-001-0000, APJ1-00009

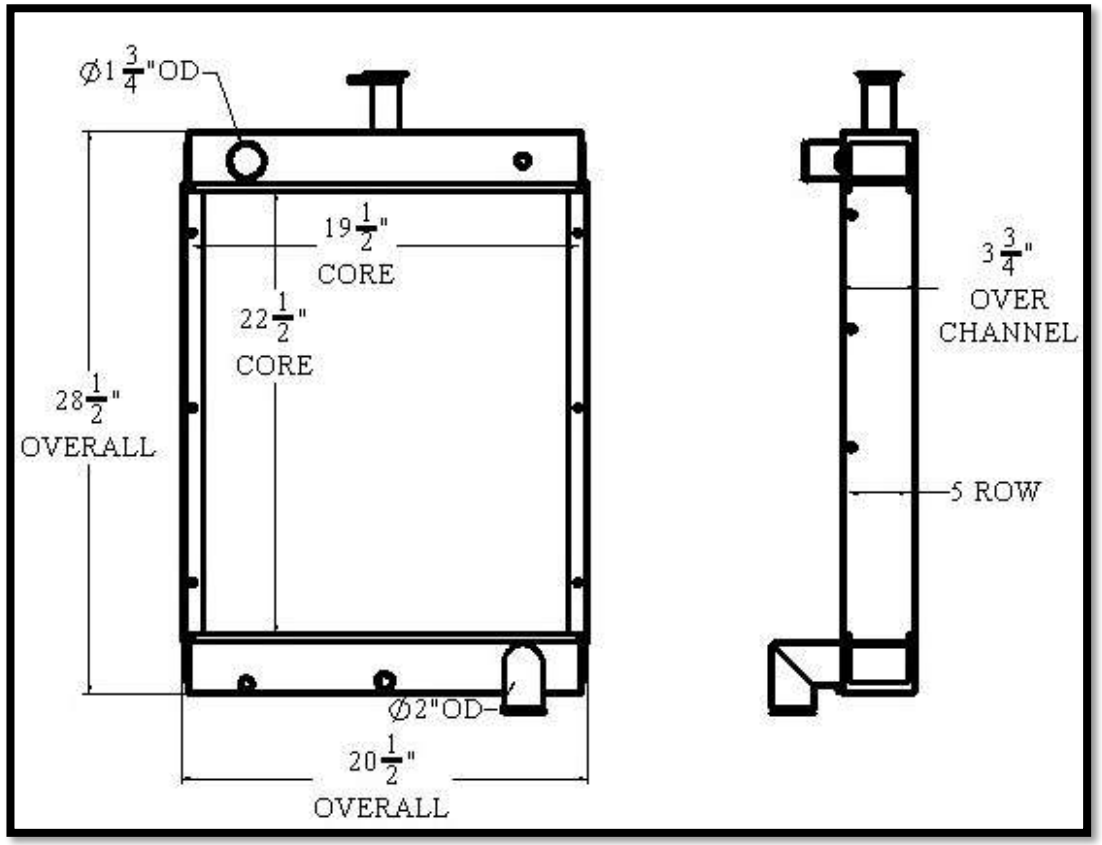

Tel 1.800.774.2168
www.bgrradiator.com

Overall Dimensions: 28-1/2” X 20-1/2” X 3-3/4”
Core: 22-1/2” X 19-1/2” X 5 ROW
Inlet: 1-3/4”OD
Outlet: 2”OD

BGR Part Number: ST-0436-6I-F
0G1933 VARIATION

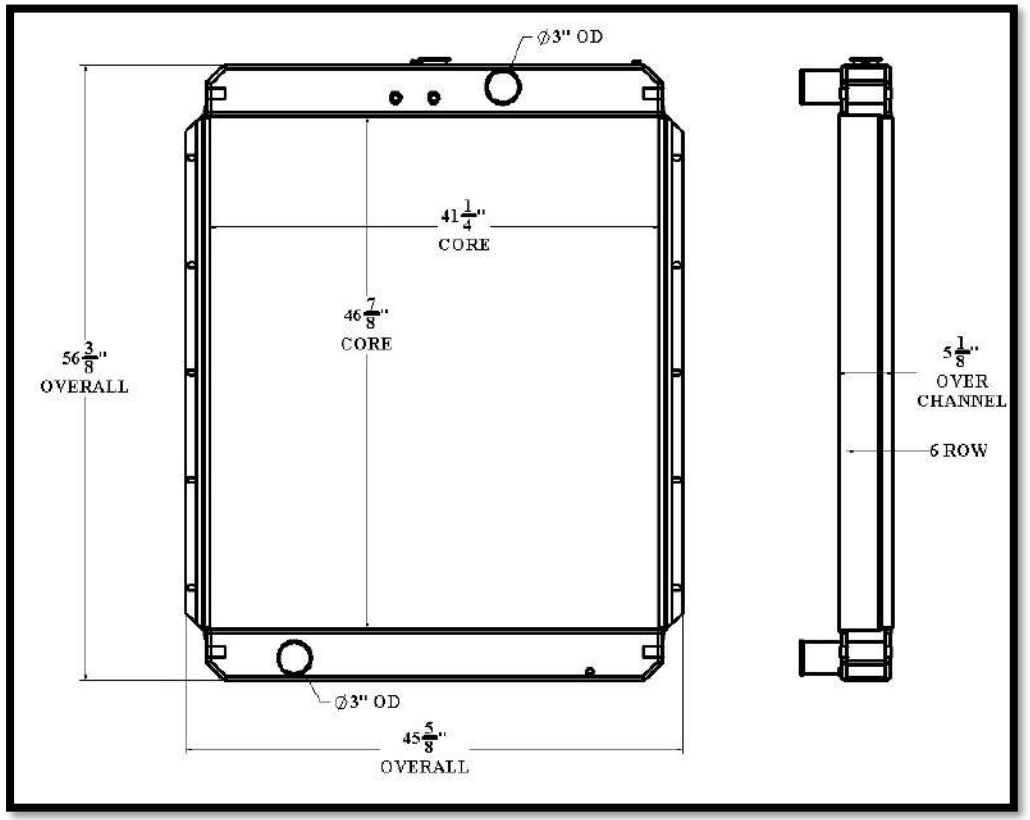

Overall Dimensions: 56-3/8” X 45-5/8” X 5-1/8”
Core: 46-7/8” X 41-1/4” X 6 ROW
Inlet: 3” OD
Outlet: 3” OD

Listed dimensions may vary slightly from OE

BGR Part Number: ST-0437-5M-EF
30301138408

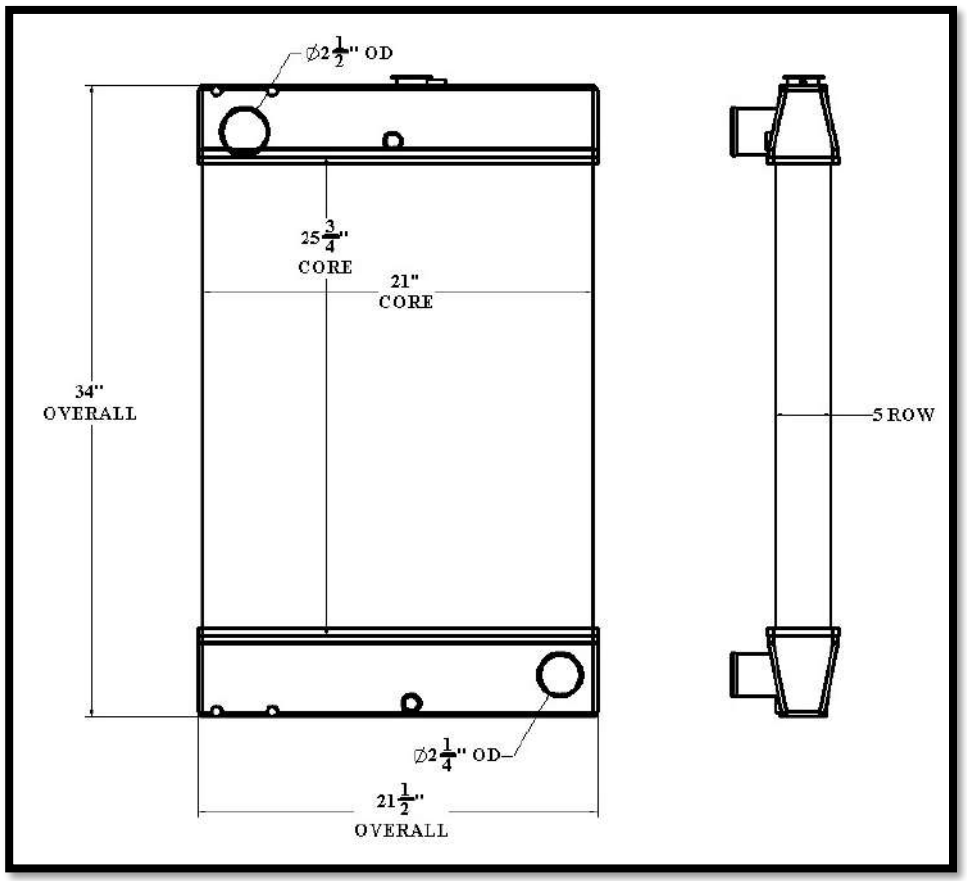

Overall Dimensions: 34” X 21-1/2”
Core: 25-3/4” X 21” X 5 ROW
Inlet: 2-1/2” OD
Outlet: 2-1/4” OD

Tel 1.800.774.2168
www.bgrradiator.com

BGR Part Number: ST-0438-5I-F
KATOLIGHT D125, SUA75804

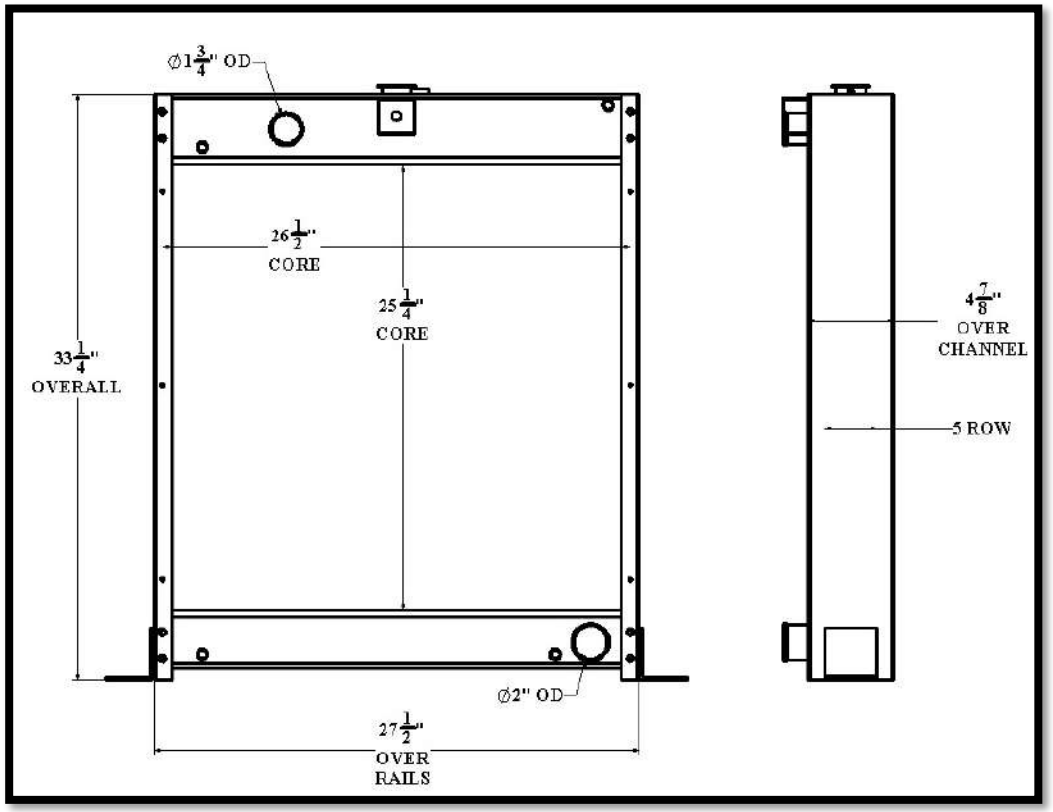

Overall Dimensions: 33-1/4” X 27-1/2” X 4-7/8”
Core: 26-1/2” X 25-1/4” X 5 ROW
Inlet: 1-3/4” OD
Outlet: 2” OD

Listed dimensions may vary slightly from OE

BGR Part Number: ST-0439-5M-NC
GM51341

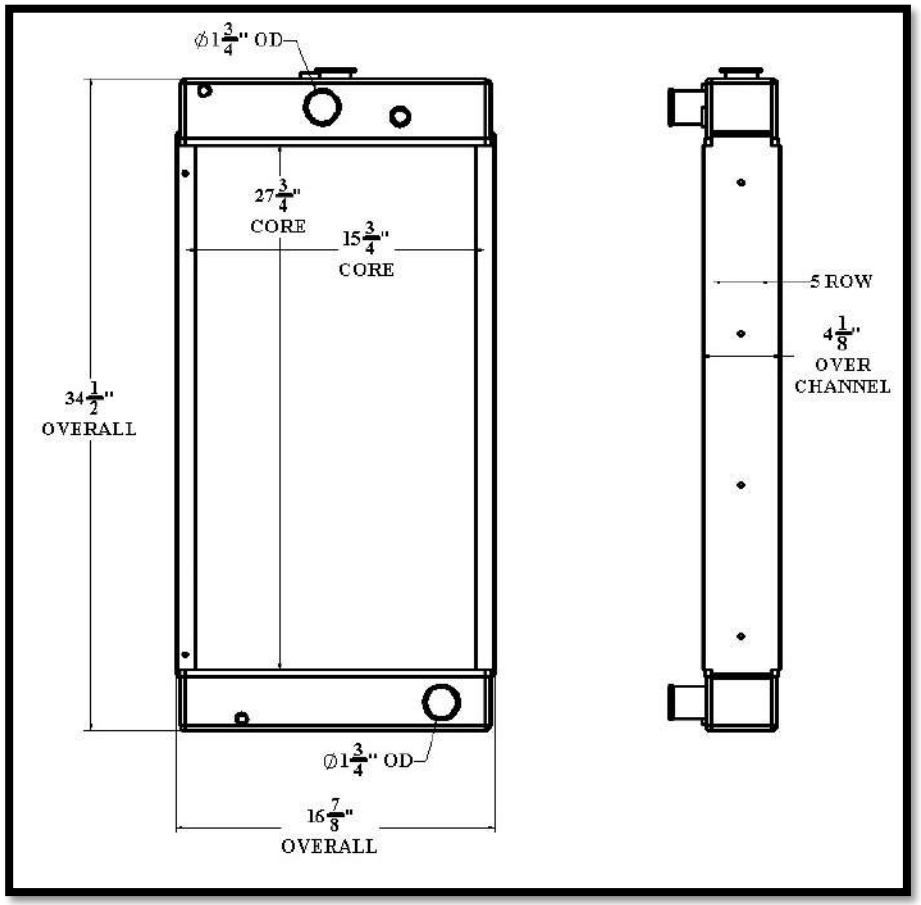

Overall Dimensions: 34-1/2” X 16-7/8” X 4-1/8
Core: 27-3/4” X 15-3/4” X 5 ROW
Inlet: 1-3/4” OD
Outlet: 1-3/4” OD

Tel 1.800.774.2168
www.bgrradiator.com

BGR Part Number: ST-0440-5M-NC
0F2611

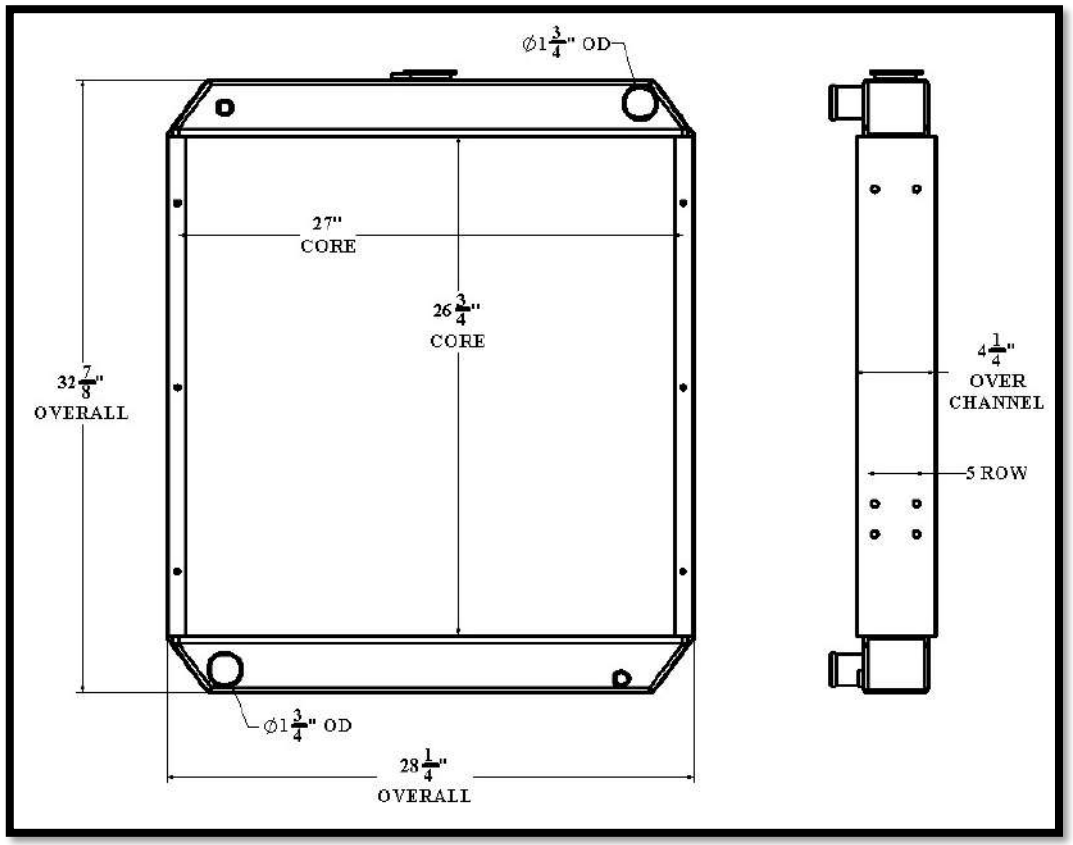

Overall Dimensions: 32-7/8” X 28-1/4” X 4-1/4”
Core: 26-3/4” X 27” X 5 ROW
Inlet: 1-3/4” OD
Outlet: 1-3/4” OD

ST439

Listed dimensions may vary slightly from OE

ST440

BGR Part Number: ST-0441-6M-F
40-3902005

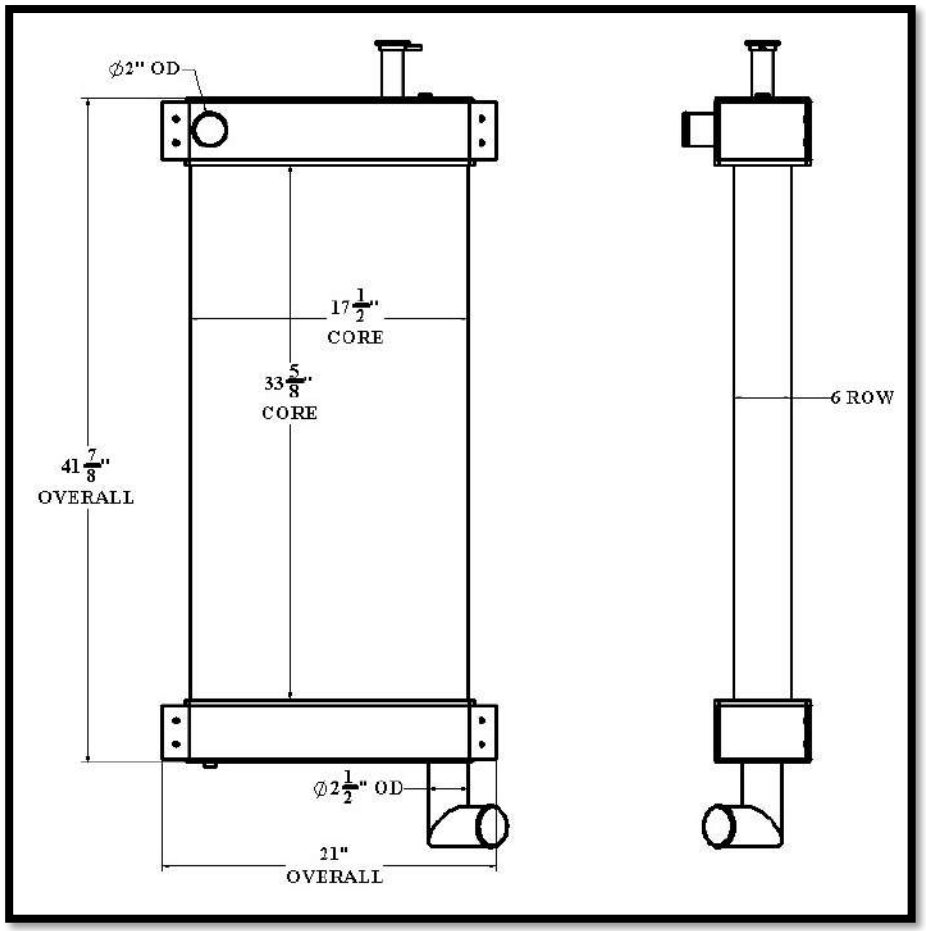

Overall Dimensions: 41-7/8” X 21”
Core: 33-5/8” X 17-1/2” X 6 ROW
Inlet: 2” OD
Outlet: 2-1/2” OD

Tel 1.800.774.2168
www.bgrradiator.com

BGR Part Number: ST-0442-4M-NC

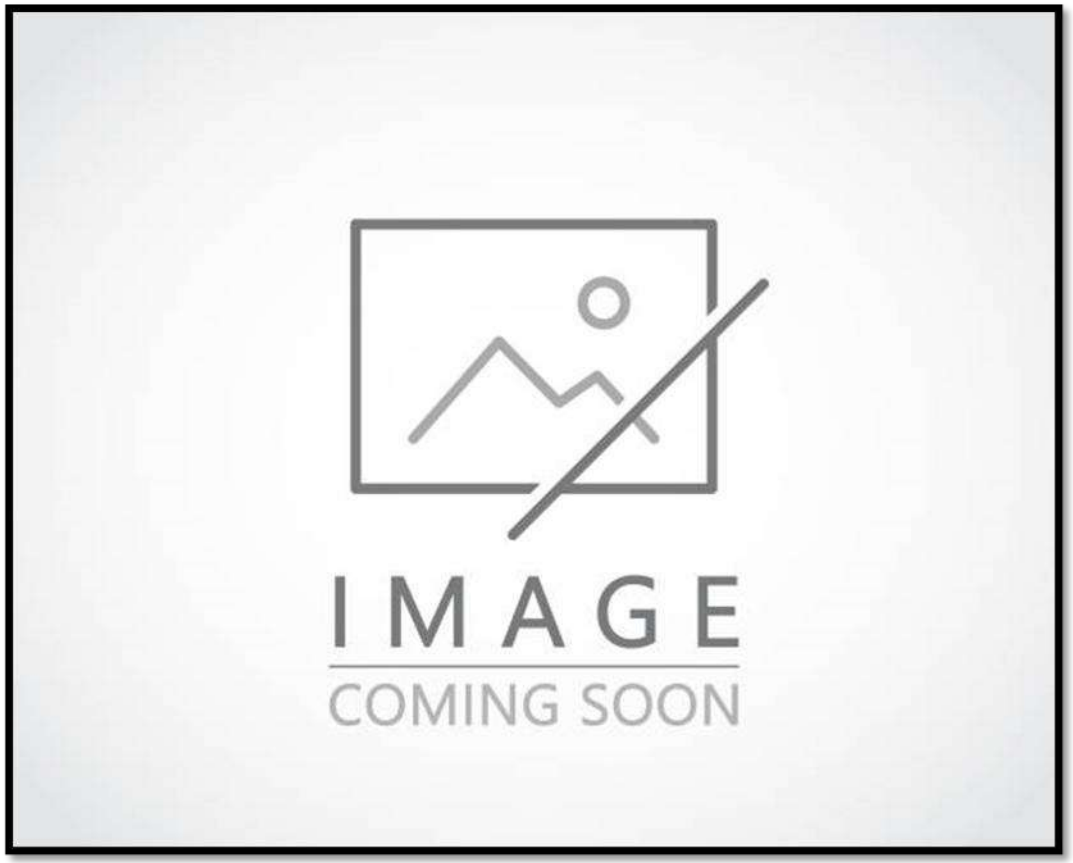

Overall Dimensions:
Core:
Inlet:
Outlet:

Listed dimensions may vary slightly from OE

BGR Part Number: ST-0443-6I-NC
INDIANA HEAT TRANSFER 11794 6412

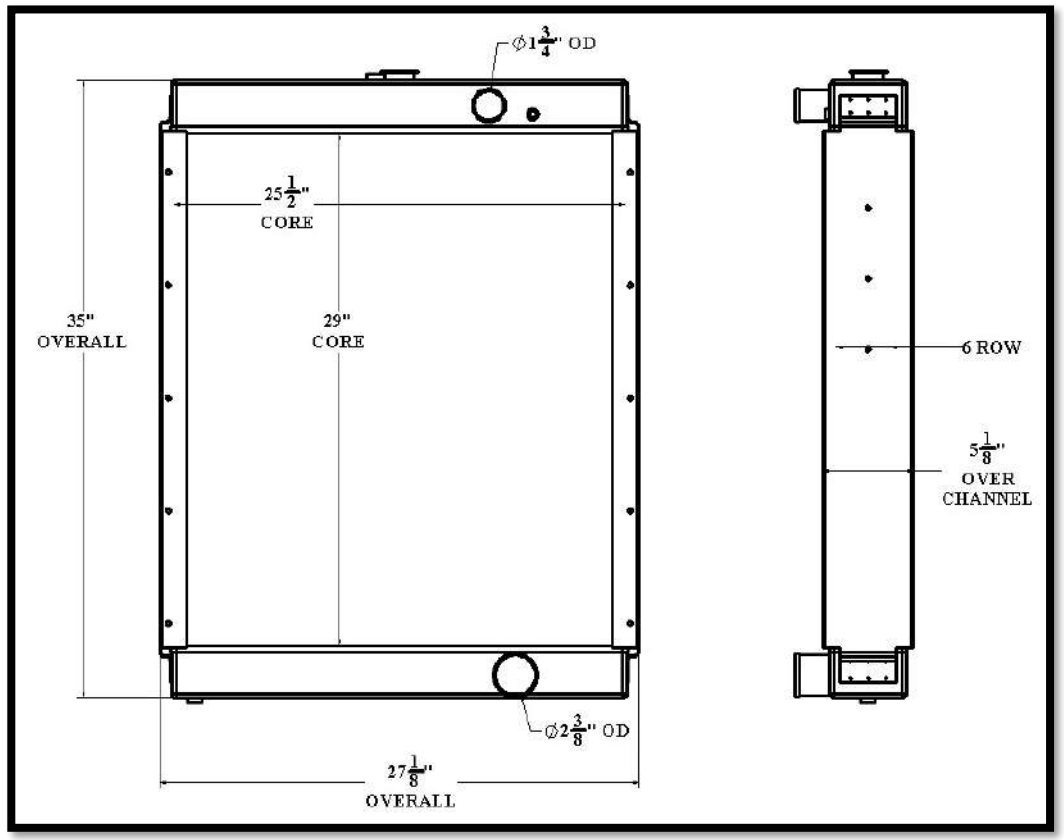

Overall Dimensions: 35” X 27-1/8” X 5-1/8”
Core: 29” X 25-1/2” X 6 ROW
Inlet: 1-3/4” OD
Outlet: 2-3/8” OD

Tel 1.800.774.2168
www.bgrradiator.com

BGR RADIATOR

BGR Part Number: ST-0444-4M-B
FORD D9JL-8005-C, 8GAA

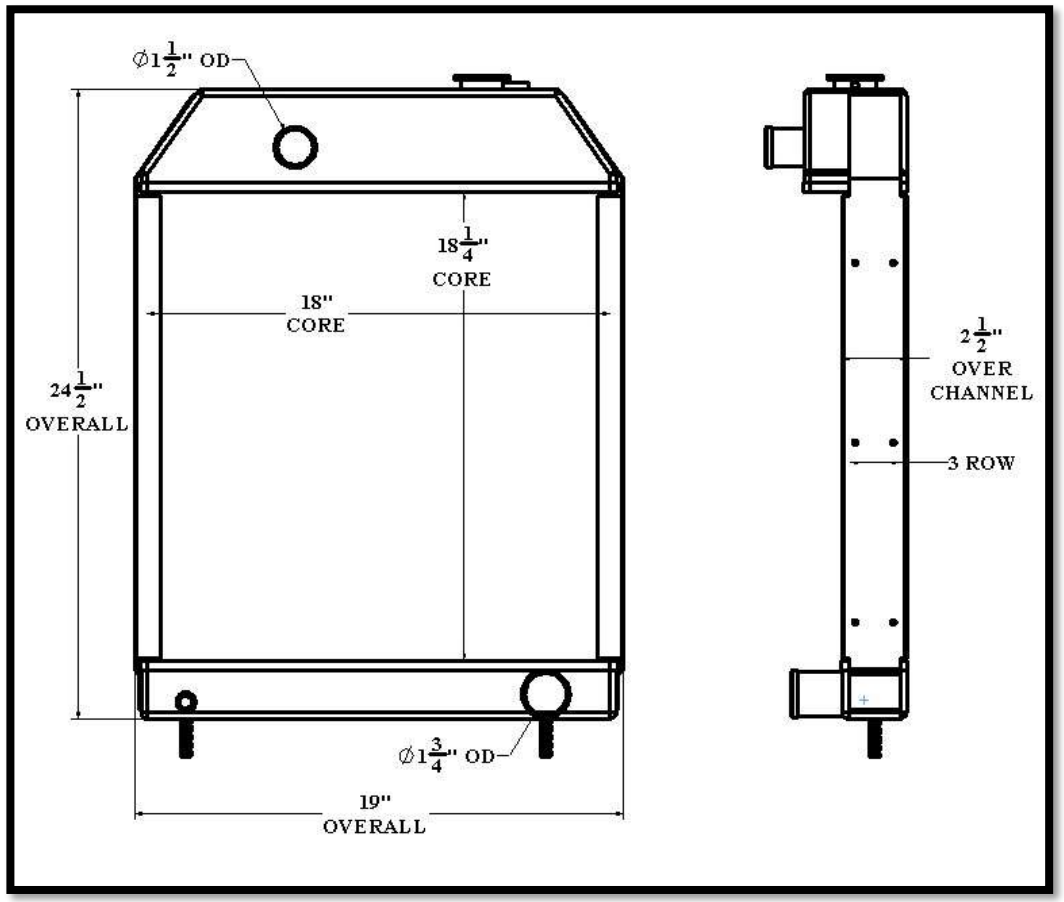

Overall Dimensions: 24” X 19” X 2-1/2”
Core: 18-1/4” X 18” X 3 ROW
Inlet: 1-1/2” OD
Outlet: 1-3/4” OD

ST443

Listed dimensions may vary slightly from OE

ST444

BGR Part Number: ST-0445-5M-F
RS-5153 REV D, 70023-01-041

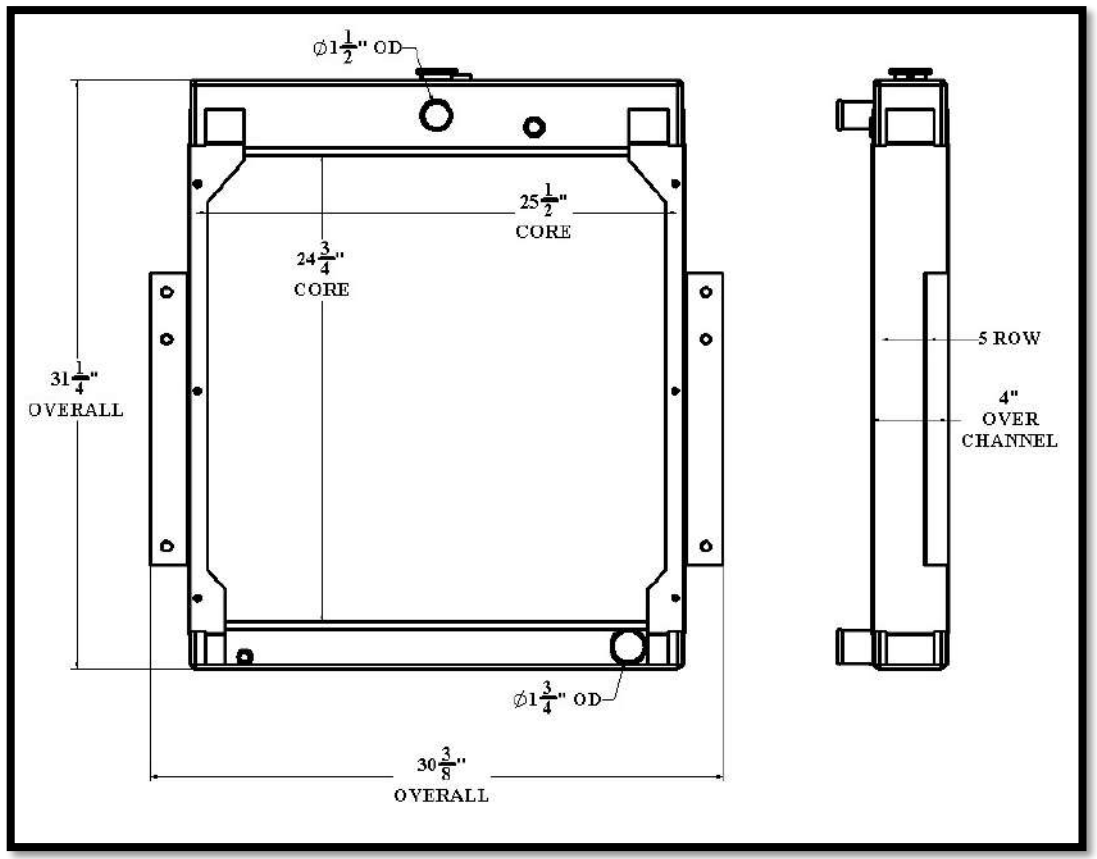

Overall Dimensions: 31-1/4” X 30-3/8” X 4”
Core: 24-3/4” X 25-1/2” X 5 ROW
Inlet: 1-1/2” OD
Outlet: 1-3/4” OD

Tel 1.800.774.2168
www.bgrradiator.com

BGR Part Number: ST-0446-4M-NC
1A10112, 030790, 207913 B

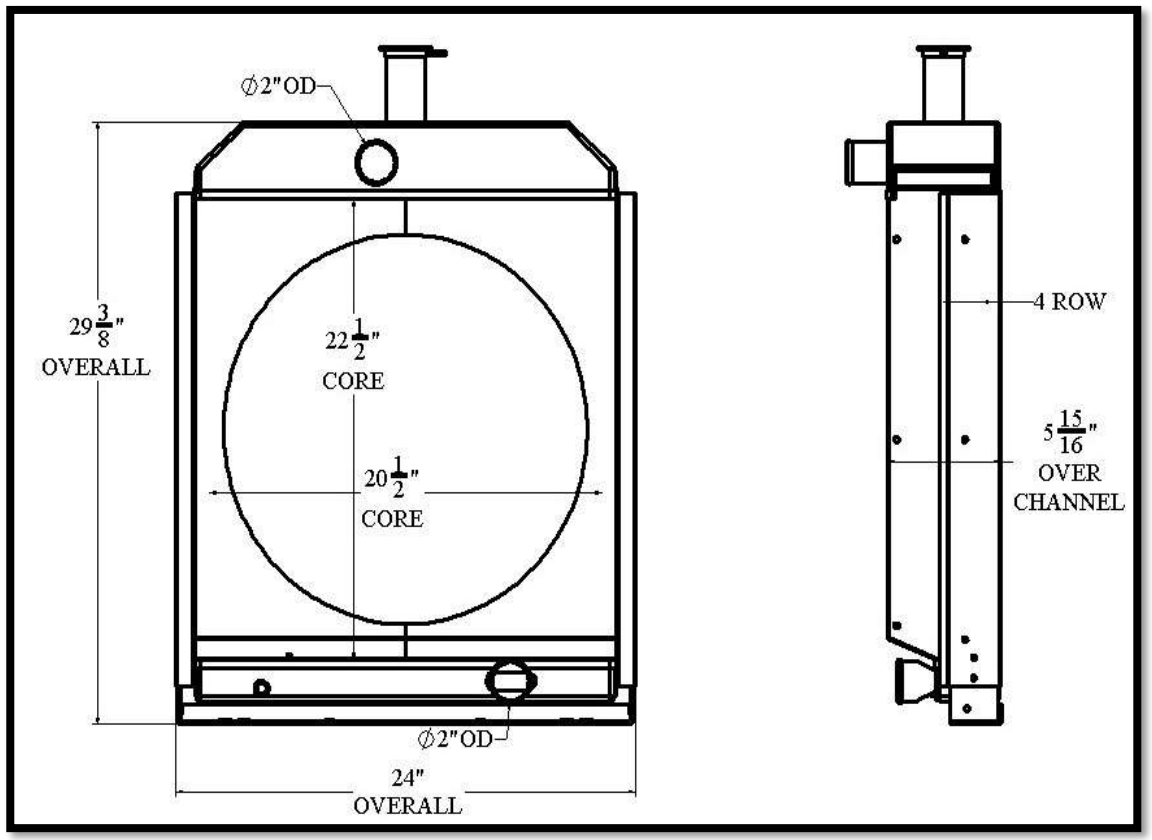

Overall Dimensions: 29-3/8” X 24” X 5-15/16”
Core: 22-1/2” X 20-1/2” X 4 ROW
Inlet: 2” OD
Outlet: 2” OD

ST445

Listed dimensions may vary slightly from OE

ST446

BGR Part Number: ST-0447-5M-F
CAT D 100 80

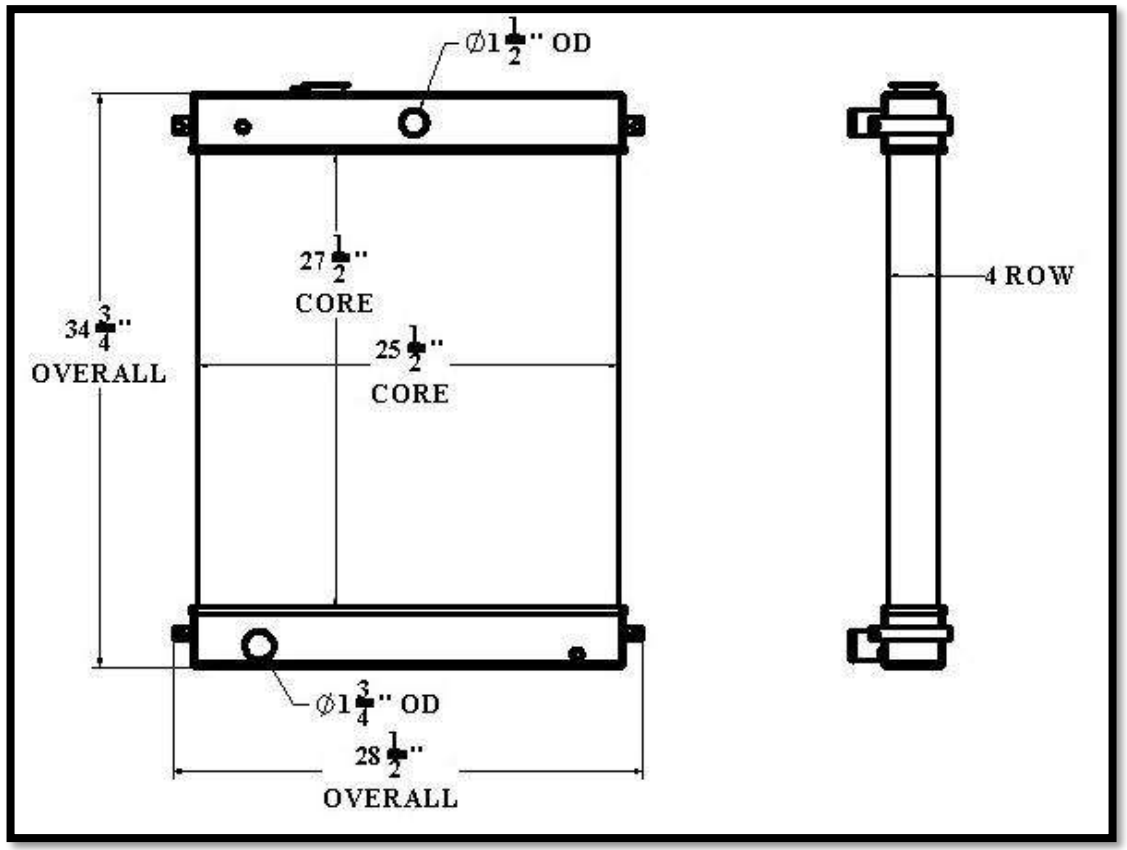

Overall Dimensions: 34-3/4” X 28-1/2”
Core: 27-1/2” X 25-1/2” X 4 ROW
Inlet: 1-1/2” OD
Outlet: 1-3/4” OD

Tel 1.800.774.2168
www.bgrradiator.com

BGR Part Number: ST-0448-8M-NC
G068928, 1A17689

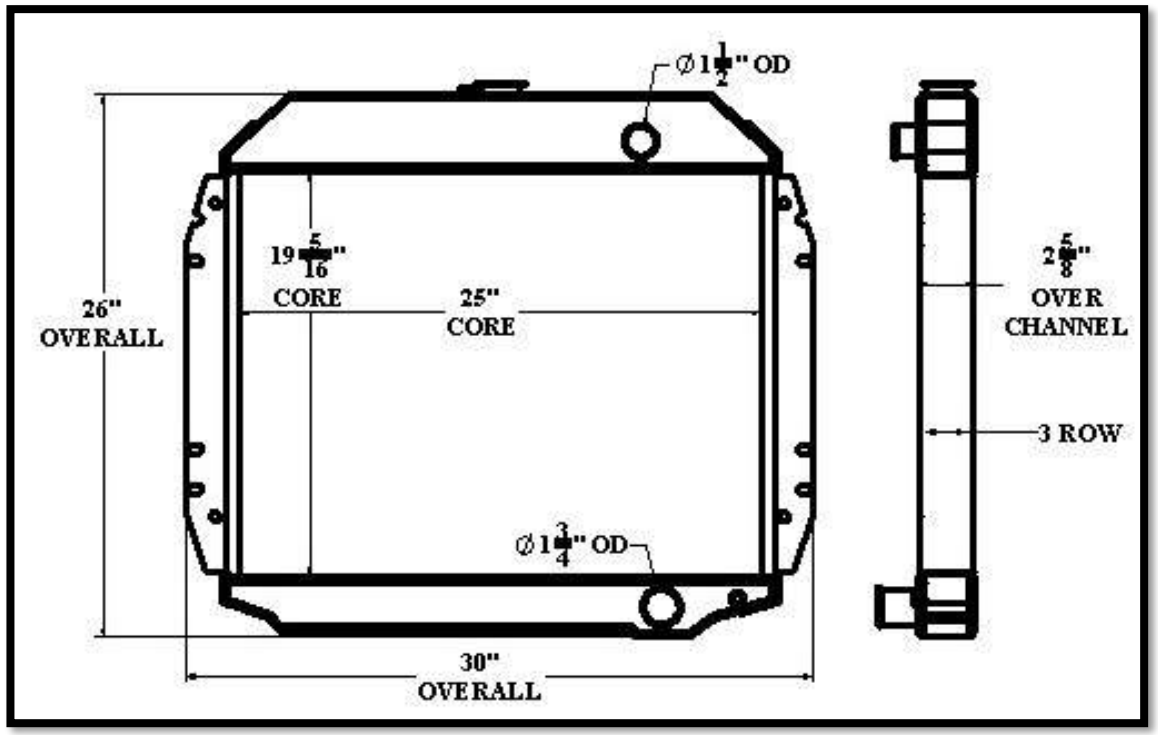

Overall Dimensions: 26” X 30” X 2-5/8”
Core: 19-5/16” X 25” X 3 ROW
Inlet: 1-1/2”OD
Outlet: 1-3/4”OD

ST447

Listed dimensions may vary slightly from OE

ST448

BGR Part Number: ST-0449-5M-NC
1A17322, 0397 48, 130-6555

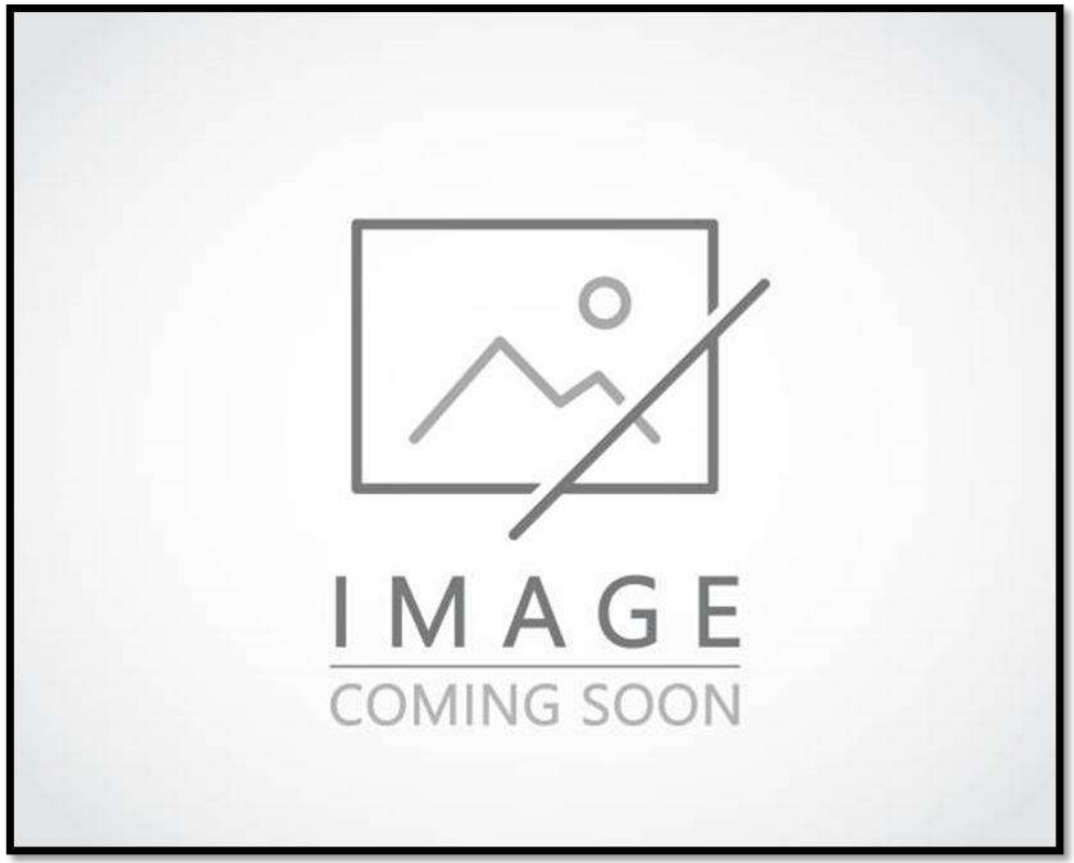

Overall Dimensions:
Core:
Inlet:
Outlet:

Tel 1.800.774.2168
www.bgrradiator.com

BGR Part Number: ST-0450-3M-B

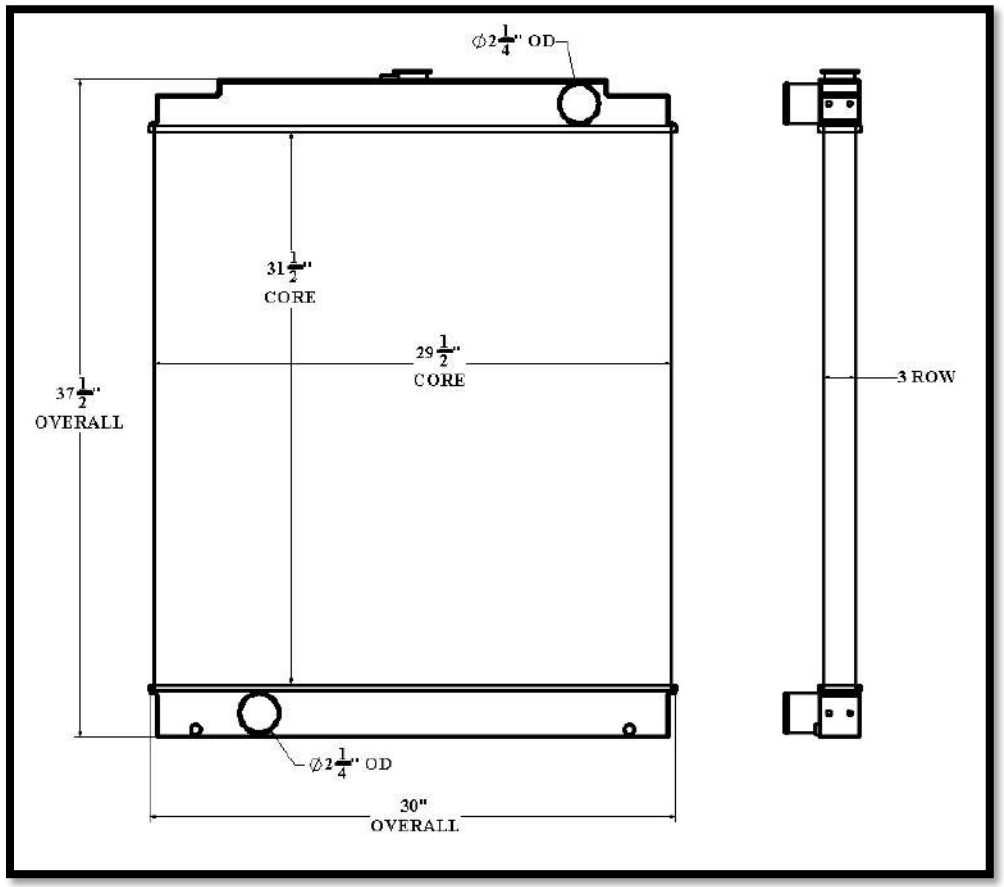

Overall Dimensions: 37-1/2” X 30”
Core: 31-1/2” X 29-1/2” X 3 ROW
Inlet: 2-1/4”OD
Outlet: 2-1/4”OD

ST449

Listed dimensions may vary slightly from OE

ST450

BGR Part Number: ST-0451-3M-EF
FLEETWOOD MOTORHOME

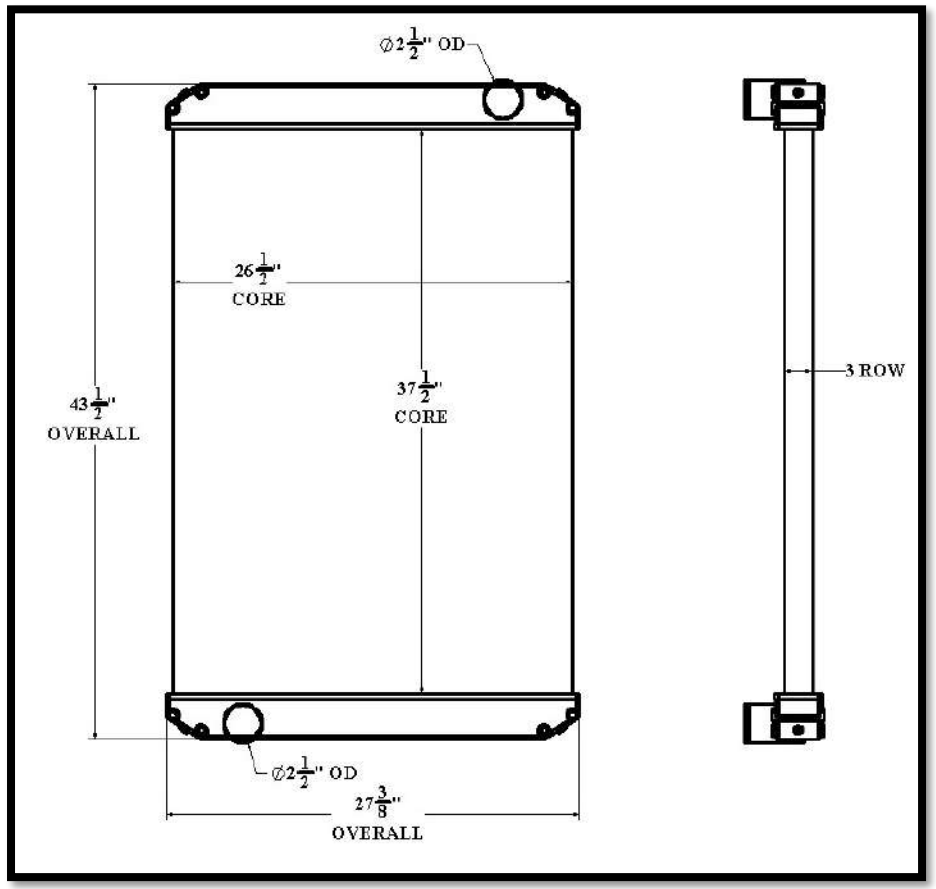

Overall Dimensions: 43-1/2” X 27-3/8”
Core: 37-1/2” X 26-1/2” X 3 ROW
Inlet: 2-1/2”OD
Outlet: 2-1/2”OD

Tel 1.800.774.2168
www.bgrradiator.com

BGR Part Number: ST-0452-6M-NC
GTI 1239A, 98097,RE52824

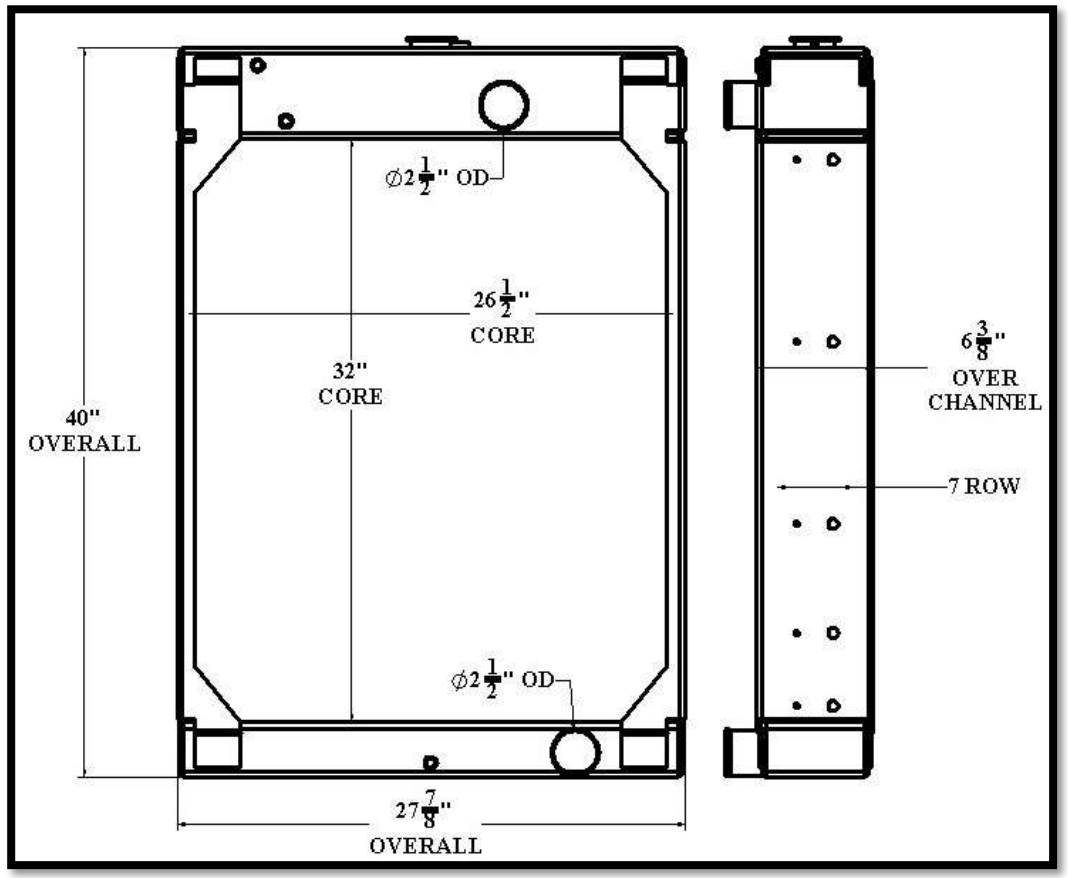

Overall Dimensions: 40” X 27-7/8” X 6-3/8”
Core: 32” X 26-1/2” X 7 ROW
Inlet: 2-1/2”OD
Outlet: 2-1/2”OD

Listed dimensions may vary slightly from OE

BGR Part Number: ST-0453-3M-F
6BTAA5.9-G6, A045M294

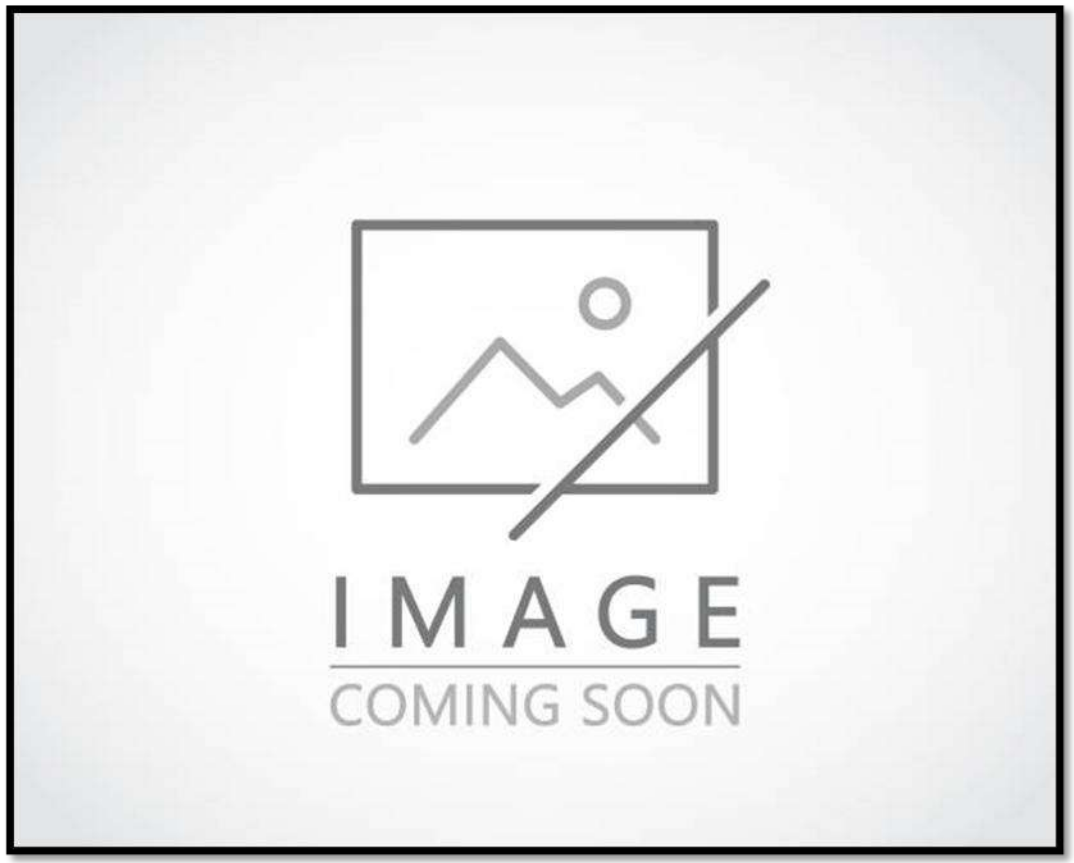

Overall Dimensions:
Core:
Inlet:
Outlet:

Tel 1.800.774.2168
www.bgrradiator.com

BGR Part Number: ST-0454-5M-F
10000-57828, 150.1301.000-2

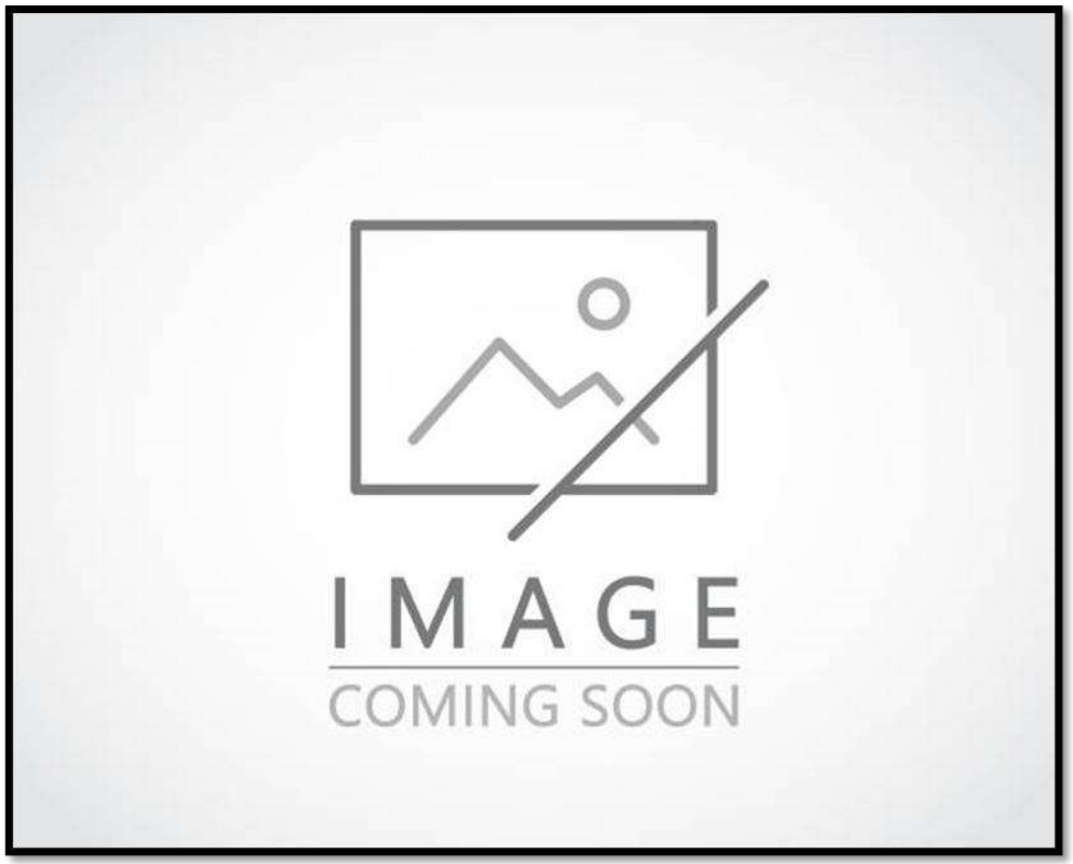

Overall Dimensions:
Core:
Inlet:
Outlet:

ST453

Listed dimensions may vary slightly from OE

ST454

BGR Part Number: ST-0455-2M-EF

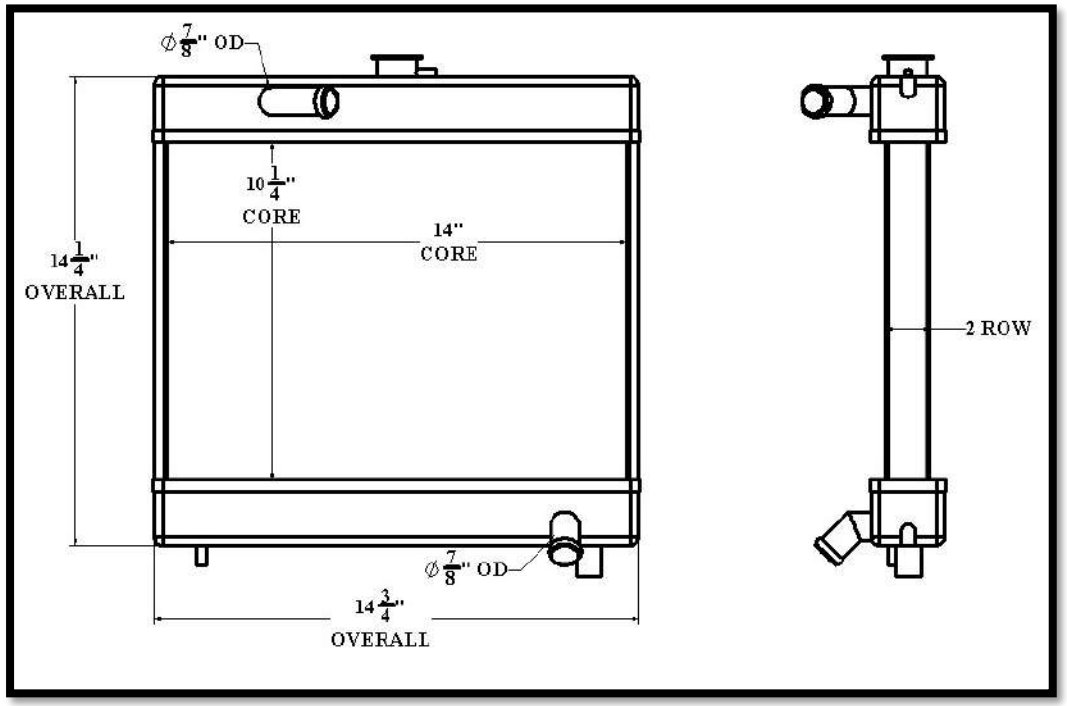

Overall Dimensions: 14-1/4” X 14-3/4”
Core: 10-1/4” X 14” X 2 ROW
Inlet: 7/8”
Outlet: 7/8”

Tel 1.800.774.2168
www.bgrradiator.com

BGR Part Number: ST-0456-6M-NC

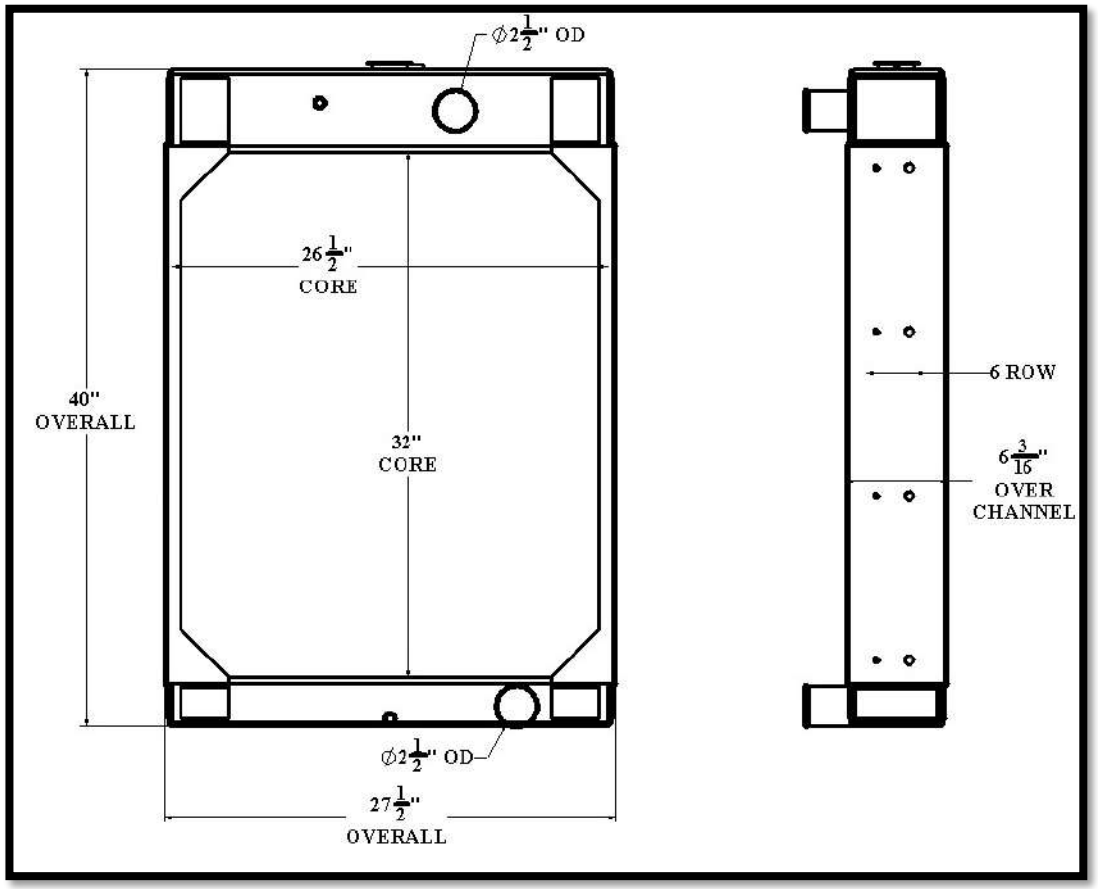

Overall Dimensions: 40-1/4” X 28” X 6-3/16”
Core: 32” X 26-1/2” X 6 ROW
Inlet: 2-1/2”
Outlet: 2-1/2”

ST455

Listed dimensions may vary slightly from OE

ST456

BGR Part Number: ST-0457-5M-B
TMD20

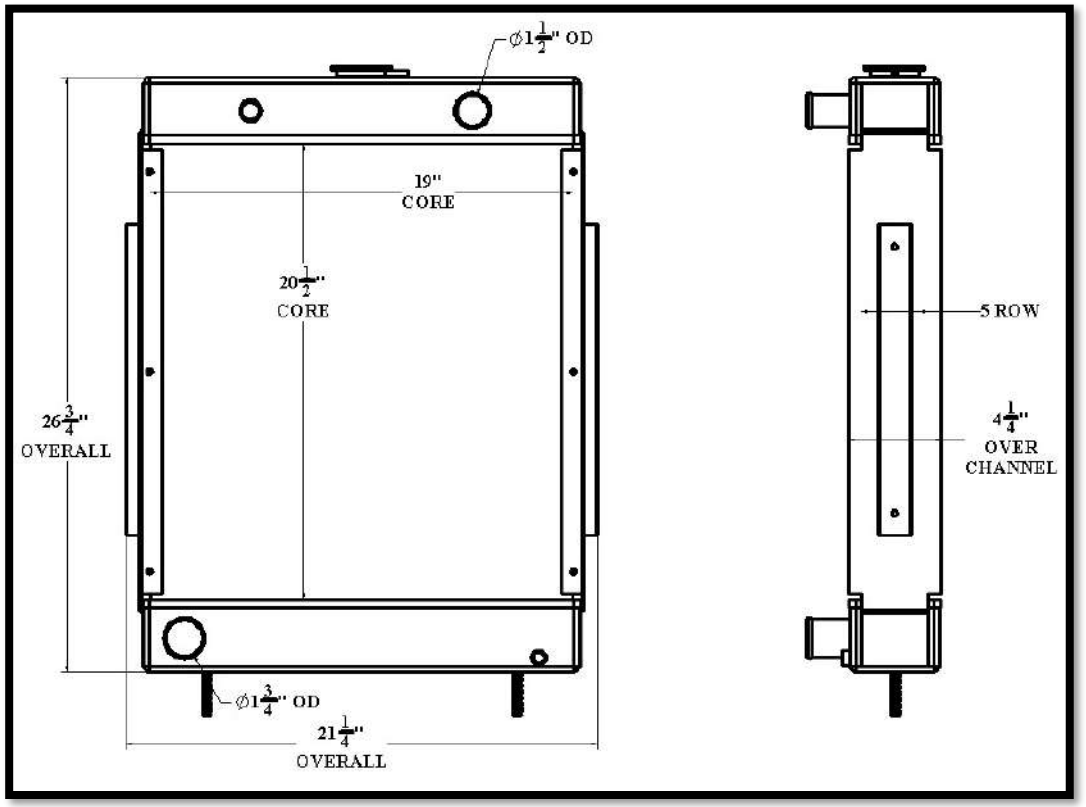

Overall Dimensions: 26-3/4” X 21-1/4” X 4-1/4”
Core: 20-1/2” X 19” X 5 ROW
Inlet: 1-1/2”
Outlet: 1-3/4”

Tel 1.800.774.2168
www.bgrradiator.com

BGR Part Number: ST-0458-6R-F
0G1933C

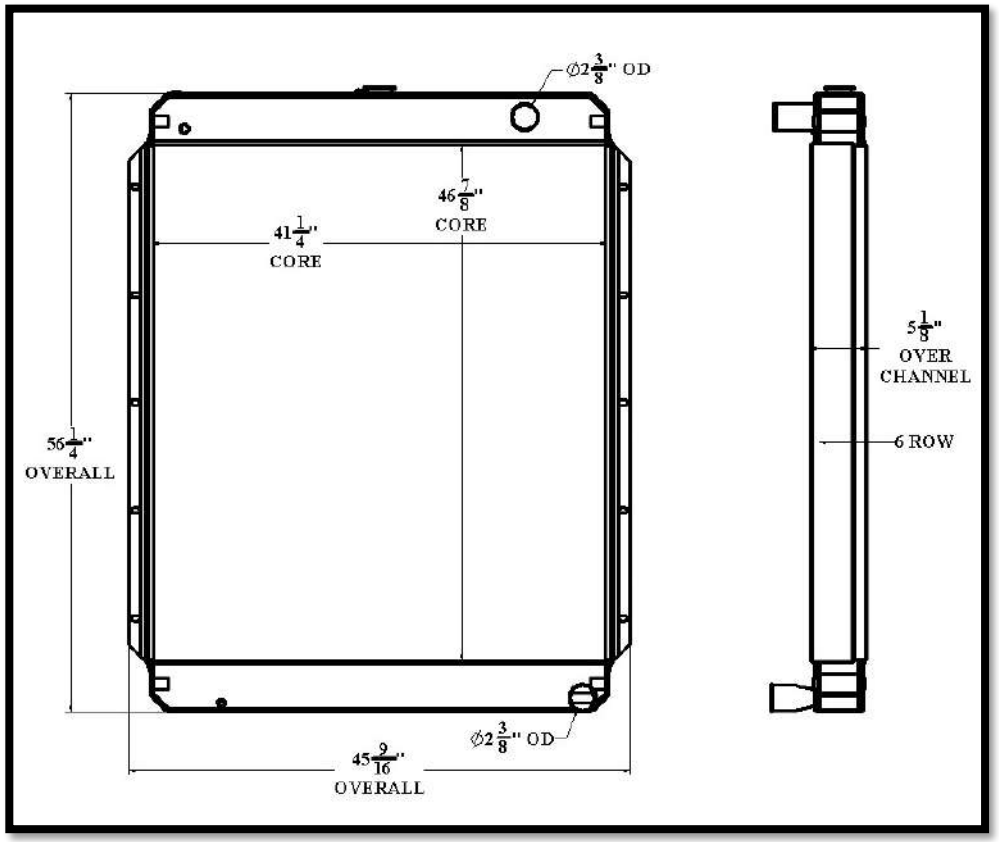

Overall Dimensions: 56-1/4” X 45-9/16” X 5-1/8”
Core: 46-7/8” X 41-1/4” X 6 ROW
Inlet: 2-3/8”
Outlet: 2-3/8”

ST457

Listed dimensions may vary slightly from OE

ST458

BGR Part Number: ST-0459-5M-NC
GM52734 REV B

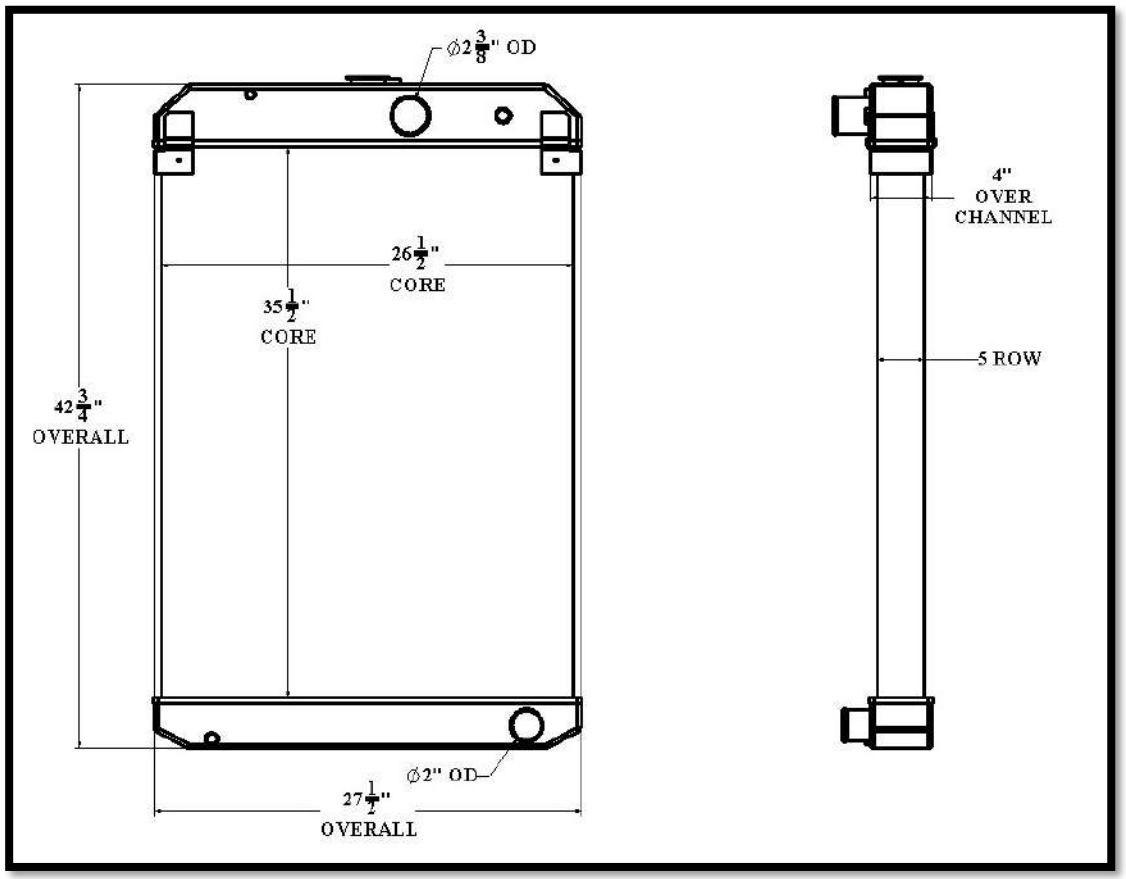

Overall Dimensions: 42-3/4” X 27-1/2” X 4”
Core: 35-1/2” X 26-1/2” X 5 ROW
Inlet: 2-3/8”
Outlet: 2”

Tel 1.800.774.2168
www.bgrradiator.com

BGR Part Number: ST-0460-4M-F
3118864 73C, 8927123

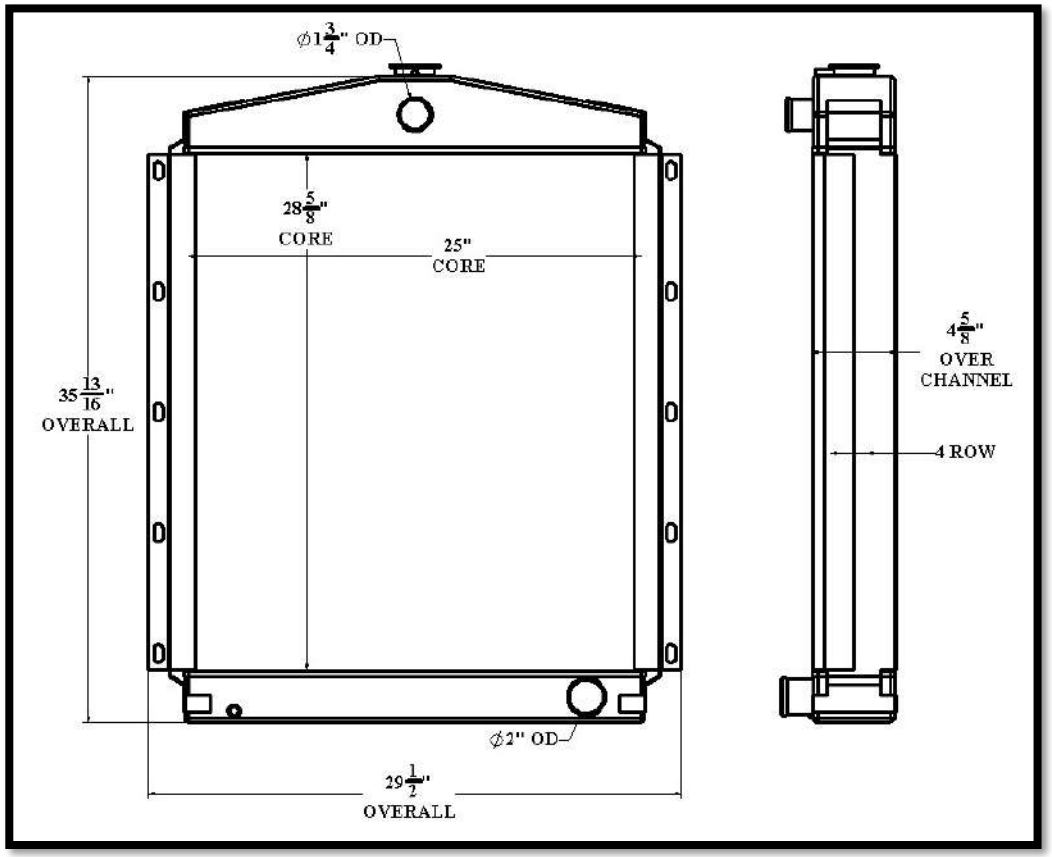

Overall Dimensions: 35-13/16” X 29-1/2” X 4-5/8”
Core: 28-5/8” X 25” X 4 ROW
Inlet: 1-3/4”
Outlet: 2”

ST459

Listed dimensions may vary slightly from OE

ST460

BGR Part Number: ST-0461-3M-F
120M.1301.100-1, 14140, 0G1286H

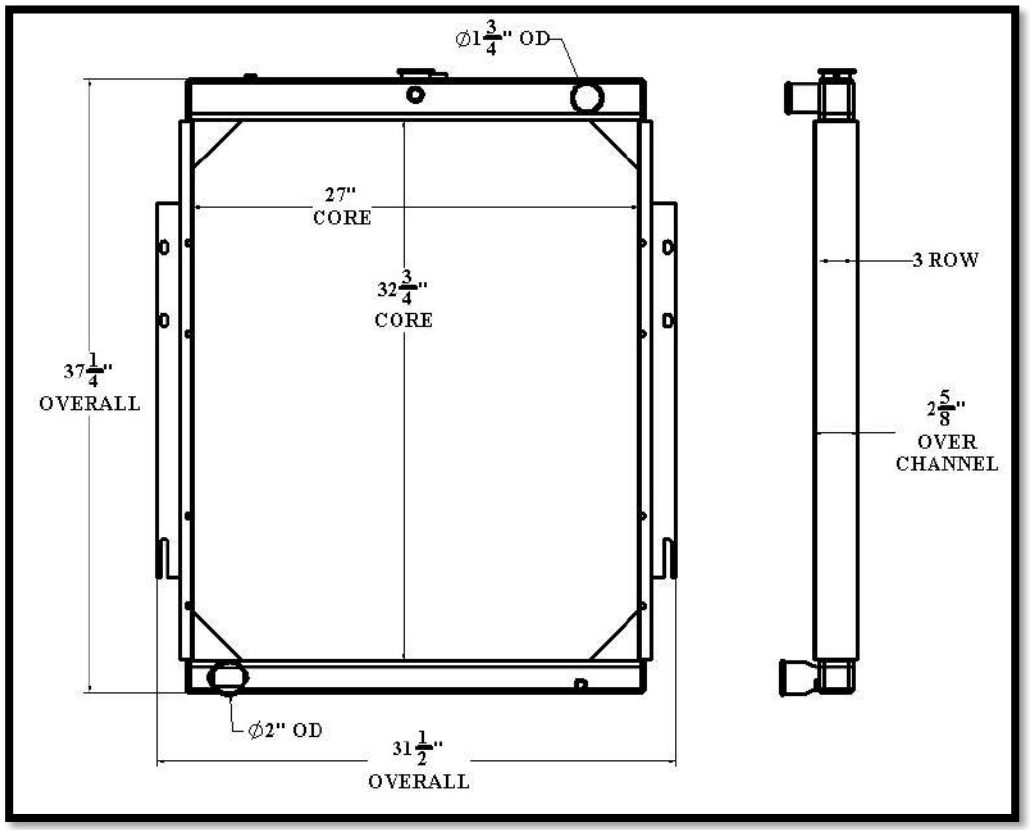

Overall Dimensions: 37-1/4” X 31-1/2” X 2-5/8”
Core: 32-3/4” X 27” X 3 ROW
Inlet: 1-3/4”
Outlet: 2”

Tel 1.800.774.2168
www.bgrradiator.com

BGR Part Number: ST-0462-3M-EF

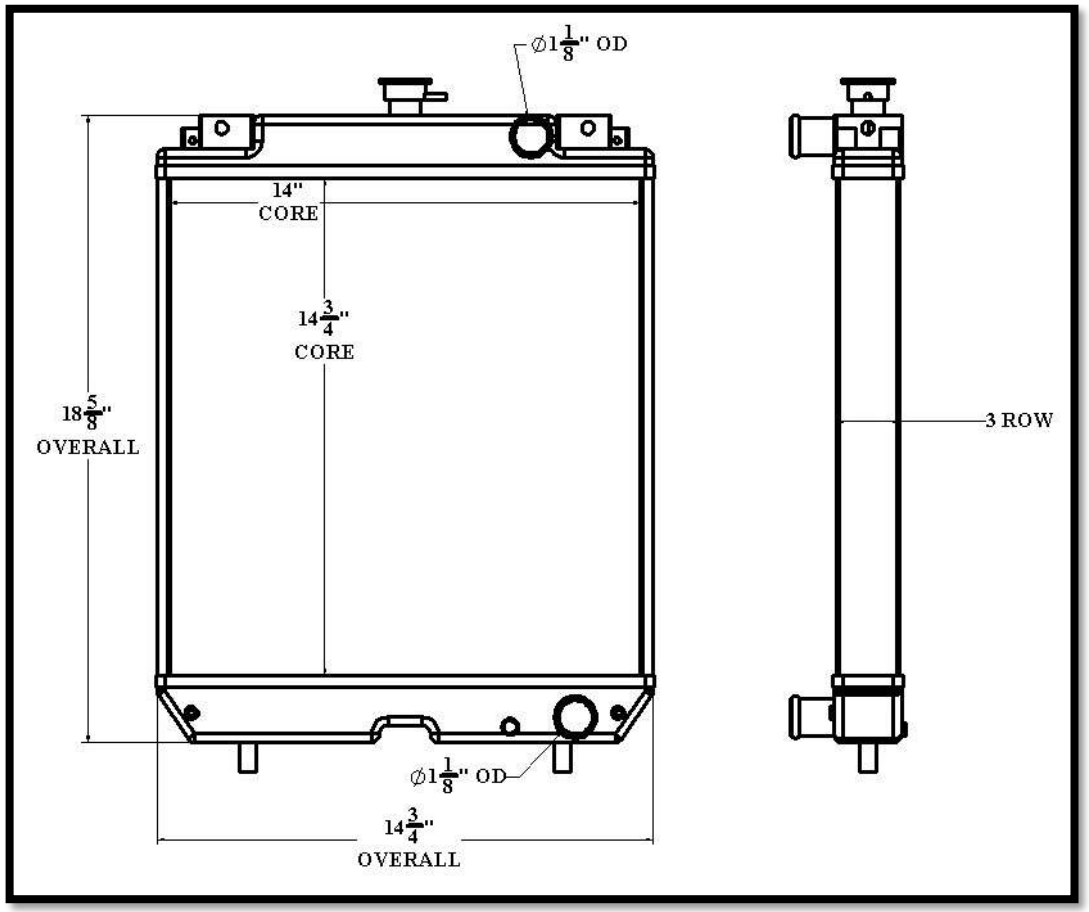

Overall Dimensions: 18-5/8” X 14-3/4”
Core: 14-3/4” X 14” X 3 ROW
Inlet: 1-1/8”
Outlet: 1-1/8”

ST461

Listed dimensions may vary slightly from OE

ST462

BGR Part Number: ST-0463-5M-NC

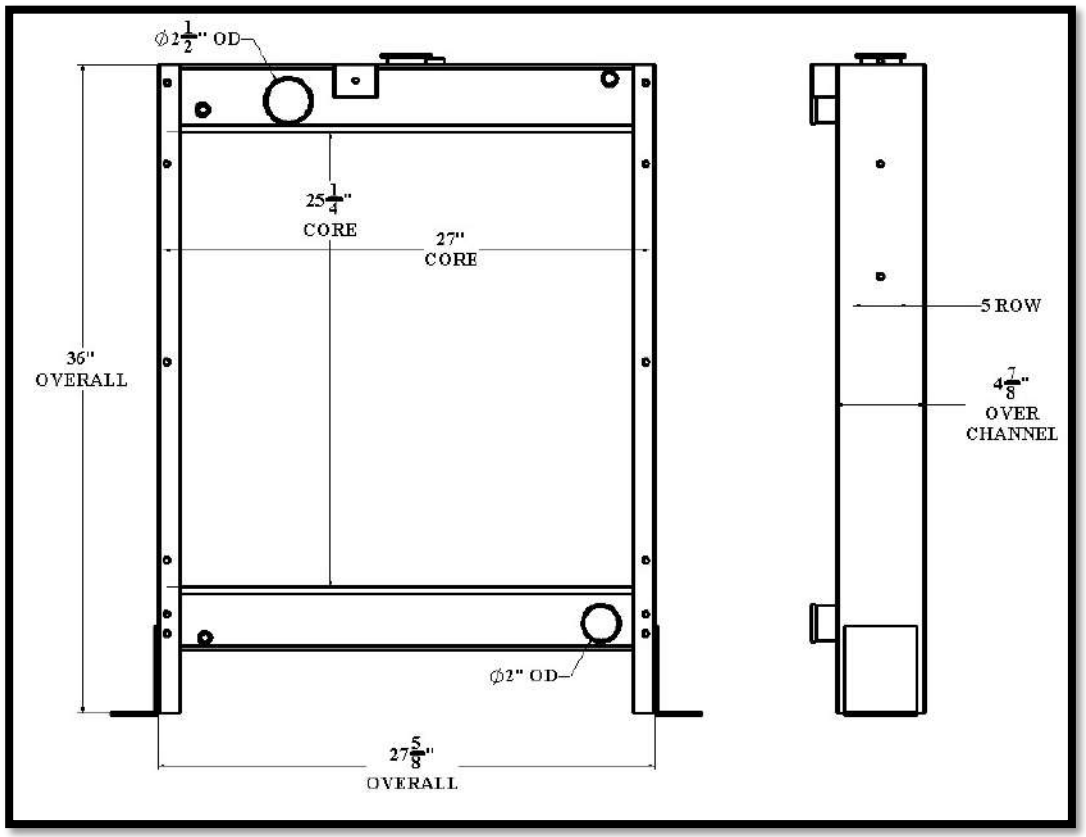

Overall Dimensions: 36” X 27-5/8” X 4-7/8”
Core: 25-1/4” X 27” X 5 ROW
Inlet: 2-1/2”
Outlet: 2”

Tel 1.800.774.2168
www.bgrradiator.com

BGR Part Number: ST-0464-4M-F
810319, 058061

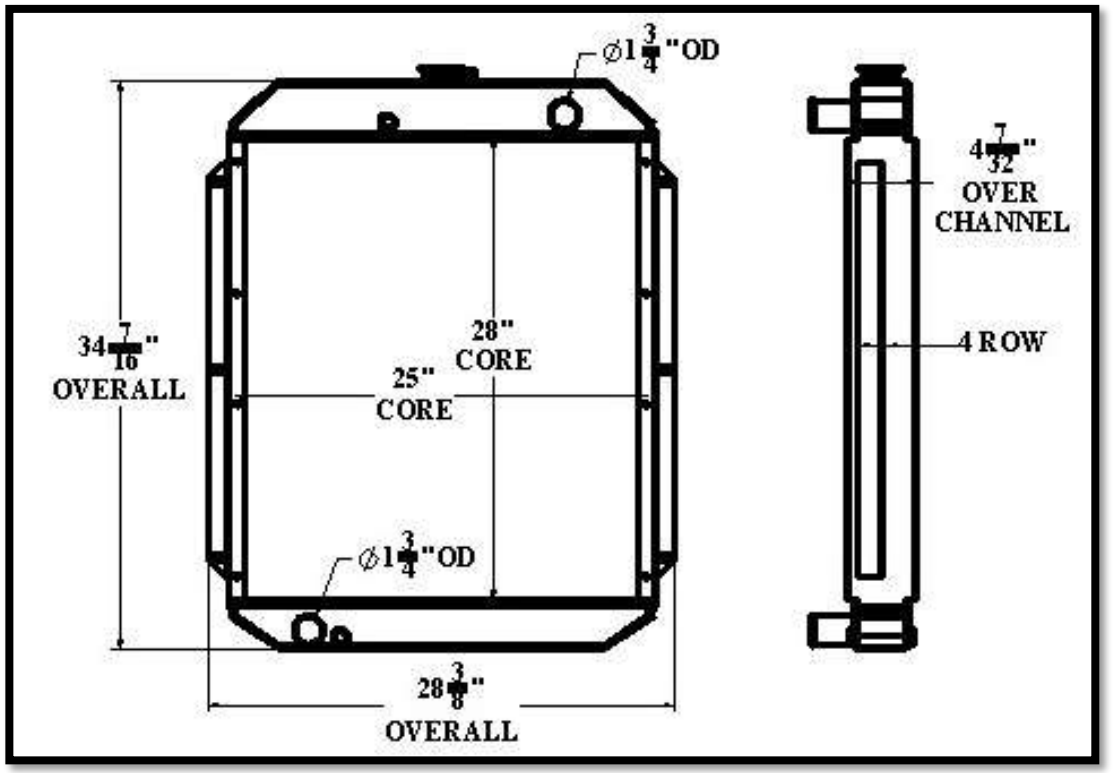

Overall Dimensions: 34-7/16” X 28-3/8” X 4-7/32”
Core: 28” X 25” X 4 ROW
Inlet: 1-3/4”OD
Outlet: 1-3/4”OD

ST463

Listed dimensions may vary slightly from OE

ST464

BGR Part Number: ST-0465-5M-NC
GM57125

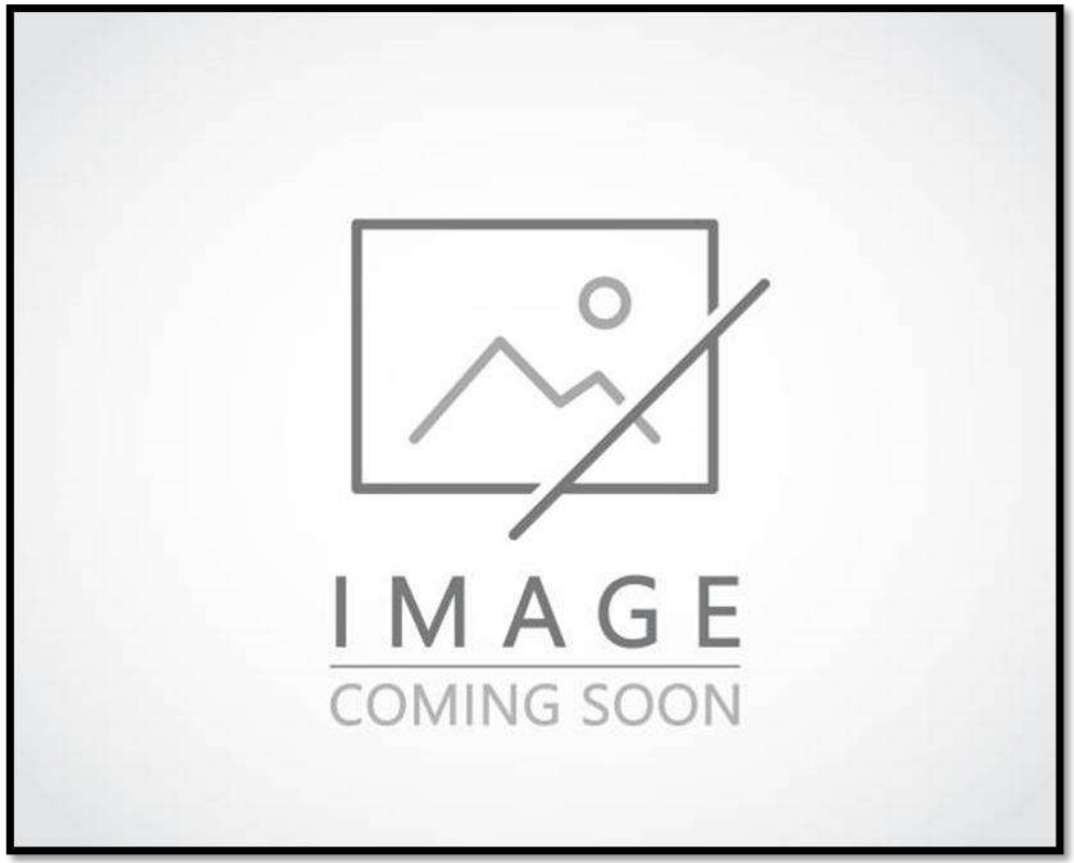

Overall Dimensions:
Core:
Inlet:
Outlet:

Tel 1.800.774.2168
www.bgrradiator.com

BGR Part Number: ST-0466-5M-EF
810319, 058061, MN422133-9810, MN22710-2290, MN222000-27003W, MN4221339810, MN2227102290, MN22200027003W, 299-4051, 2994051, 2485B297, 484-6282, 4846282

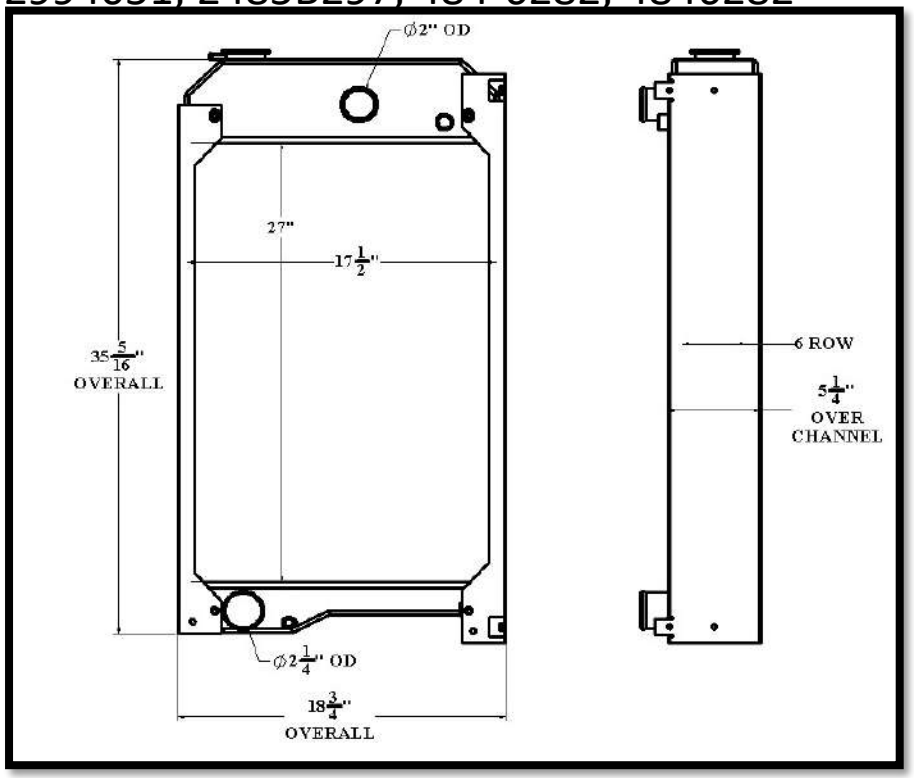

Overall Dimensions: 35-5/16” X 18-3/4” X 5-1/4”
Core: 27” X 17-1/2” X 6 ROW
Inlet: 2”
Outlet: 2-1/4”

ST465

Listed dimensions may vary slightly from OE

ST466

BGR Part Number: ST-0467-5M-EF
56053-1028 REV 2, E96788

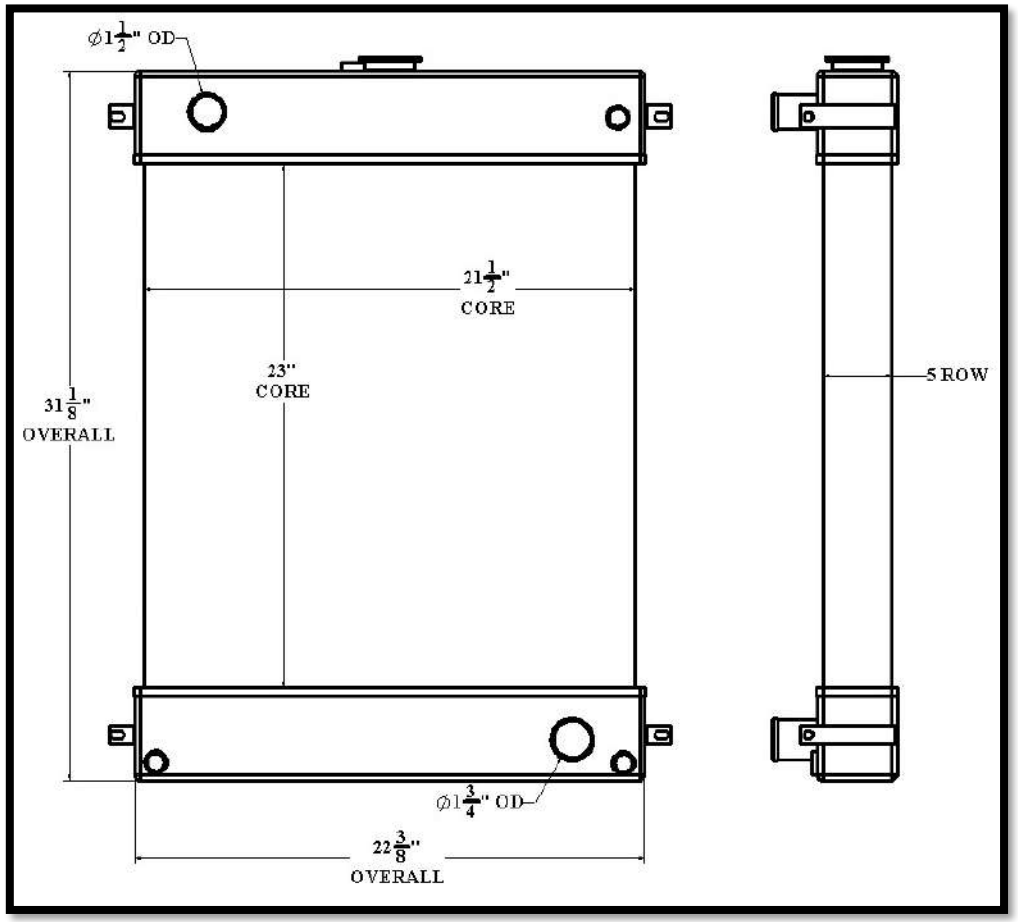

Overall Dimensions: 31-1/8” X 22-3/8”
Core: 23” X 21-1/2” X 5 ROW
Inlet: 1-1/2”
Outlet: 1-3/4”

Tel 1.800.774.2168
www.bgrradiator.com

BGR Part Number: ST-0468-8M-NC

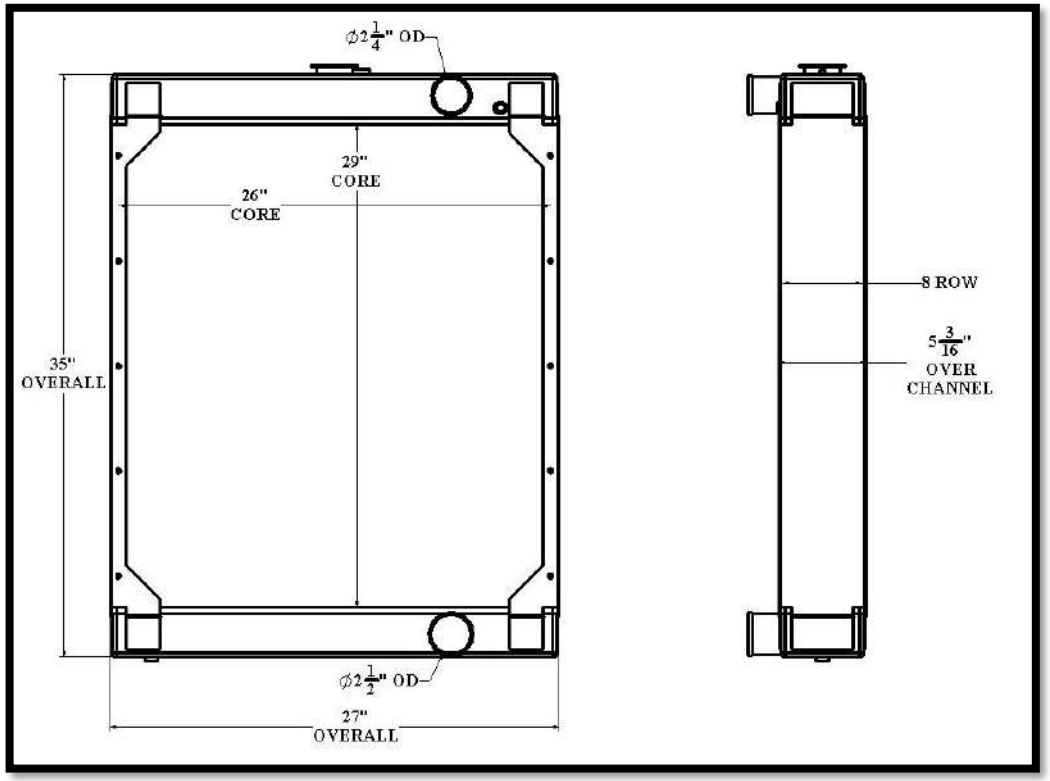

Overall Dimensions: 35” X 27” X 5-3/16”
Core: 29” X 26” X 5 ROW
Inlet: 2-1/4”
Outlet: 2-1/2”

ST467

Listed dimensions may vary slightly from OE

ST468

BGR Part Number: ST-0469-5M-NC
258-8684

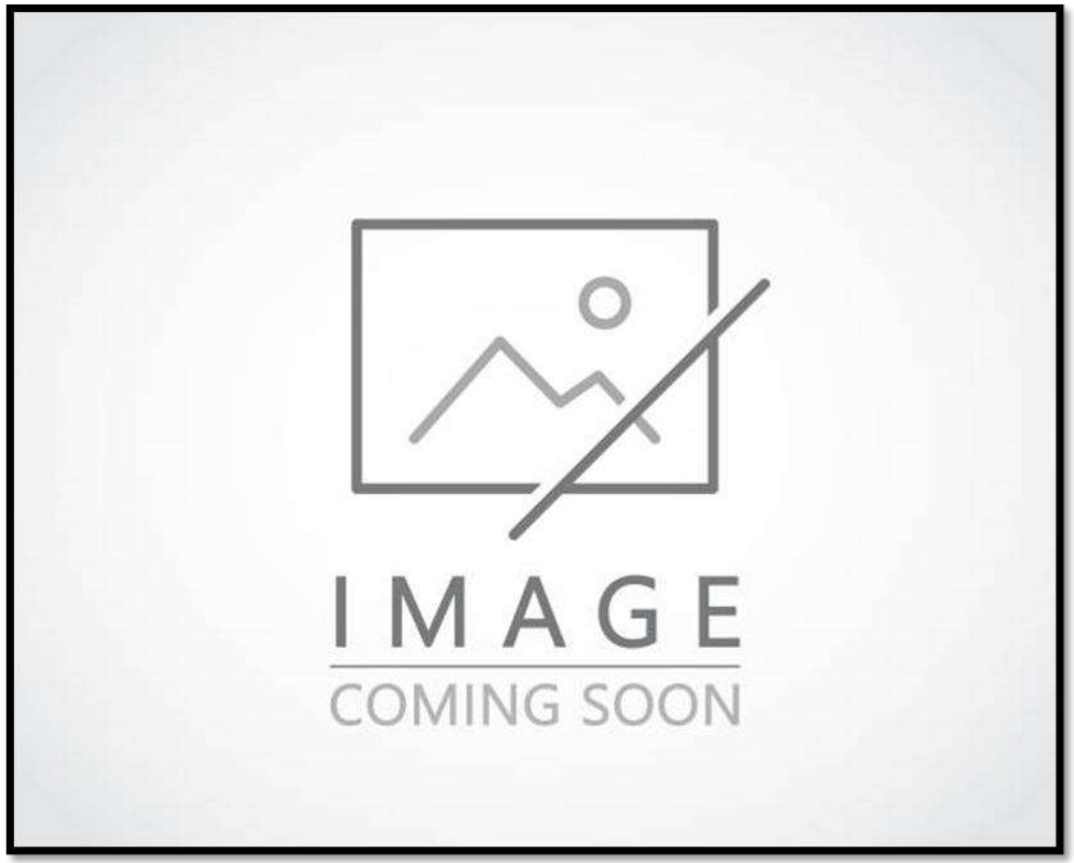

Overall Dimensions:
Core:
Inlet:
Outlet:

Tel 1.800.774.2168
www.bgrradiator.com

BGR Part Number: ST-0470-5M-F
F1JL-8005-AA

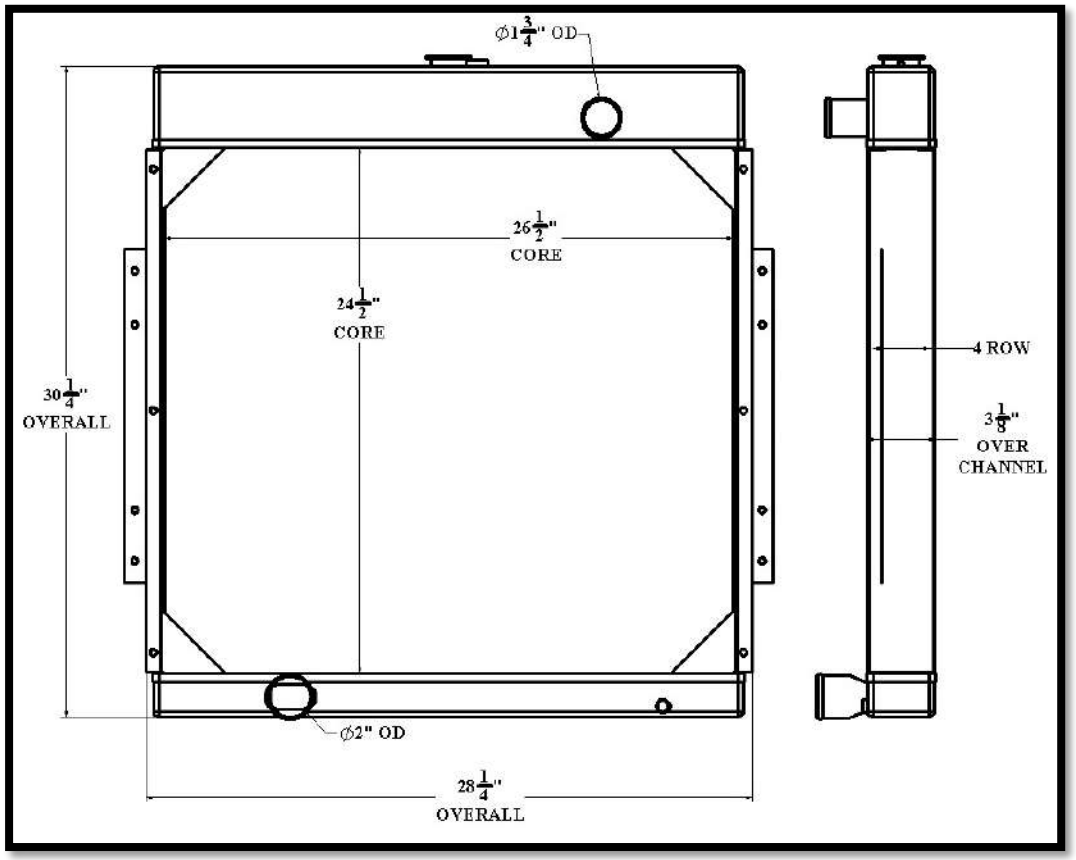

Overall Dimensions: 30-1/4” X 28-1/4” X 3-1/8”
Core: 24-1/4” X 26-1/2” X 4 ROW
Inlet: 1-3/4”
Outlet: 2”

ST469

Listed dimensions may vary slightly from OE

ST470

BGR Part Number: ST-0471-9M-NC
10457402010, PGL 32000938, 451522,
REV.D 56037-01-016

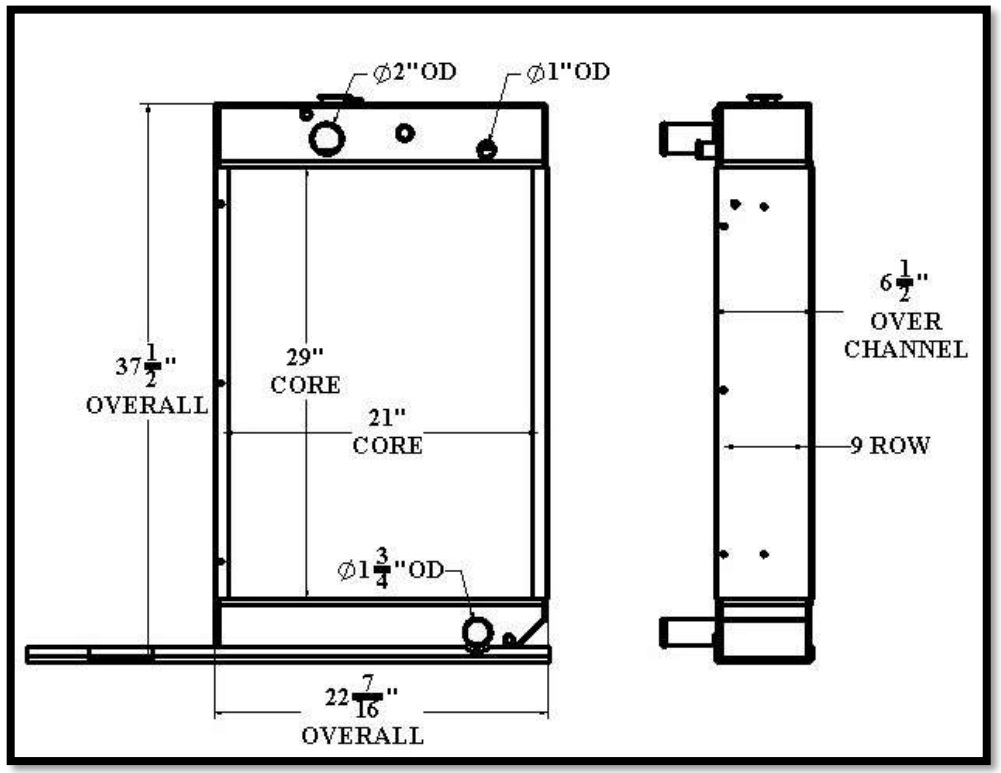

Overall Dimensions: 37-1/2” X 22-7/16 X 6-1/2”
Core: 29” X 21” X 9 ROW
Inlet: 2”OD, 1” OD
Outlet: 1-3/4”OD

Tel 1.800.774.2168
www.bgrradiator.com

BGR Part Number: ST-0472-5M-F
810321

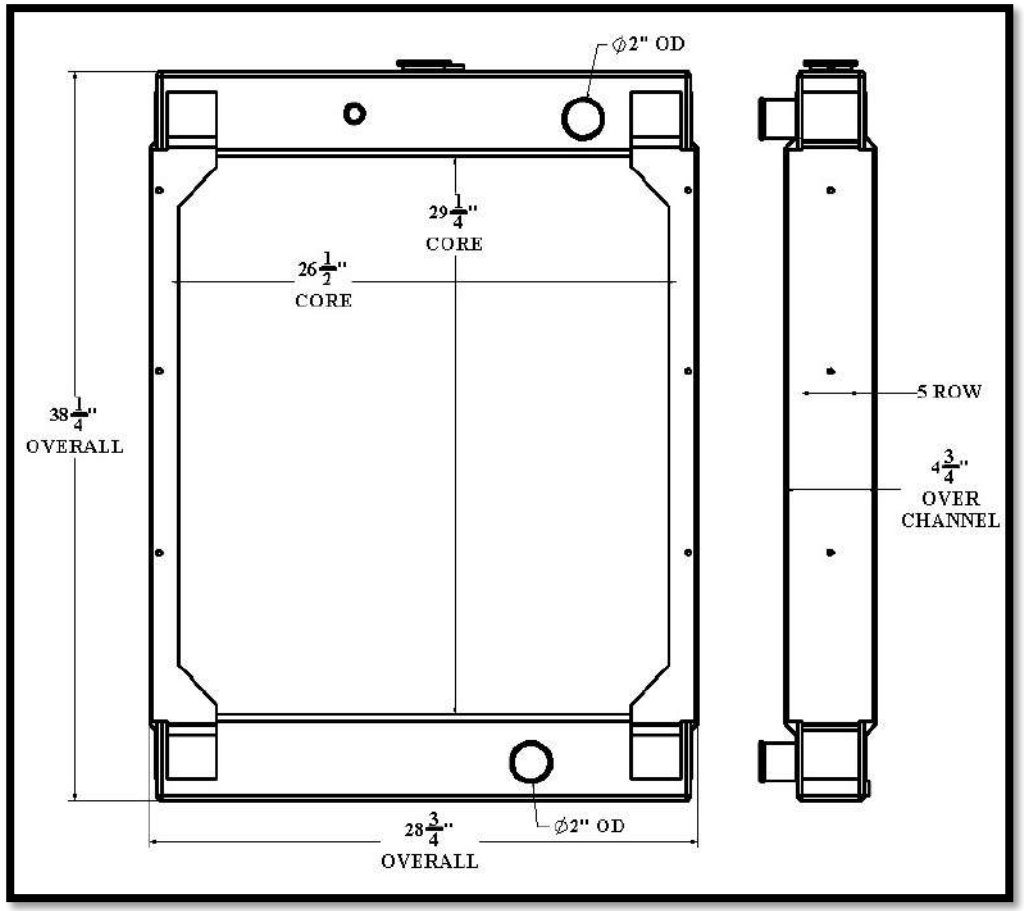

Overall Dimensions: 38-1/4” X 28-3/4” X 4-3/4”
Core: 29-1/4” X 26-1/2” X 5 ROW
Inlet: 2”
Outlet: 2”

ST471

Listed dimensions may vary slightly from OE

ST472

BGR Part Number: ST-0473-6R-F
0G1933A

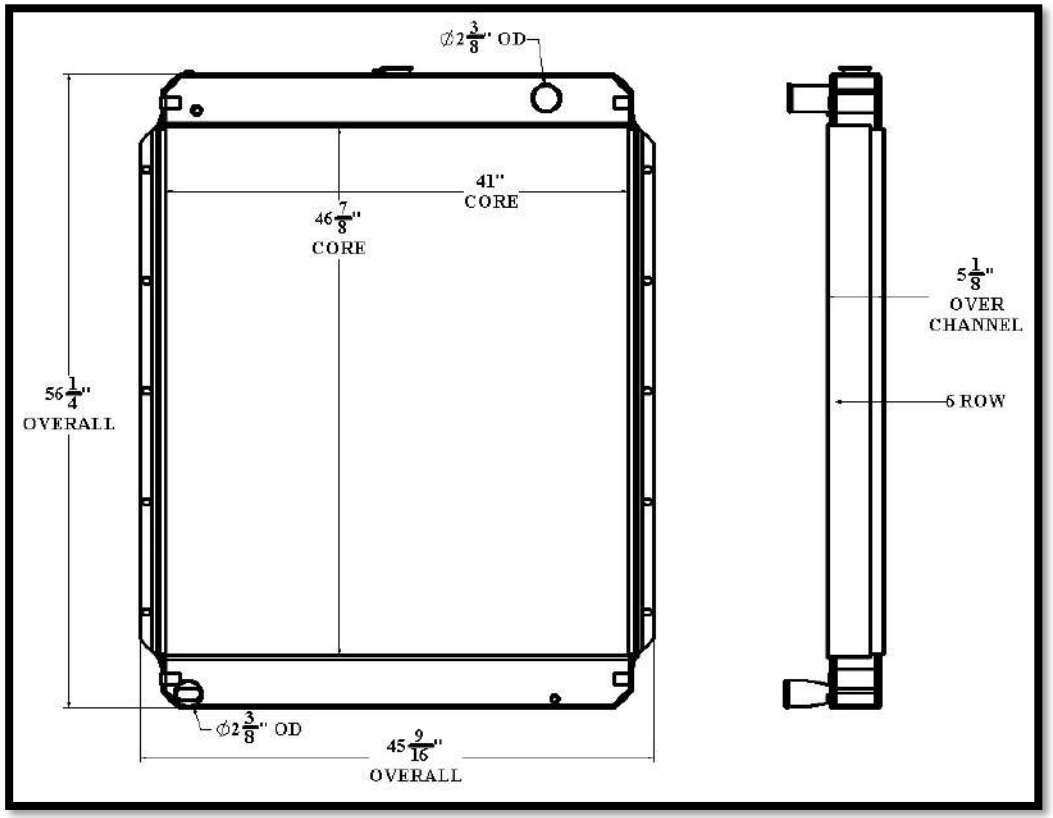

Overall Dimensions: 56-1/4” X 45-9/16” X 5-1/8”
Core: 48-7/8” X 41” X 6 ROW
Inlet: 2-3/8”
Outlet: 2-3/8”

Tel 1.800.774.2168
www.bgrradiator.com

BGR Part Number: ST-0474-6M-EF
MN2200016110P, MN4222108360, T411520, 2485B299, MN22200041210P

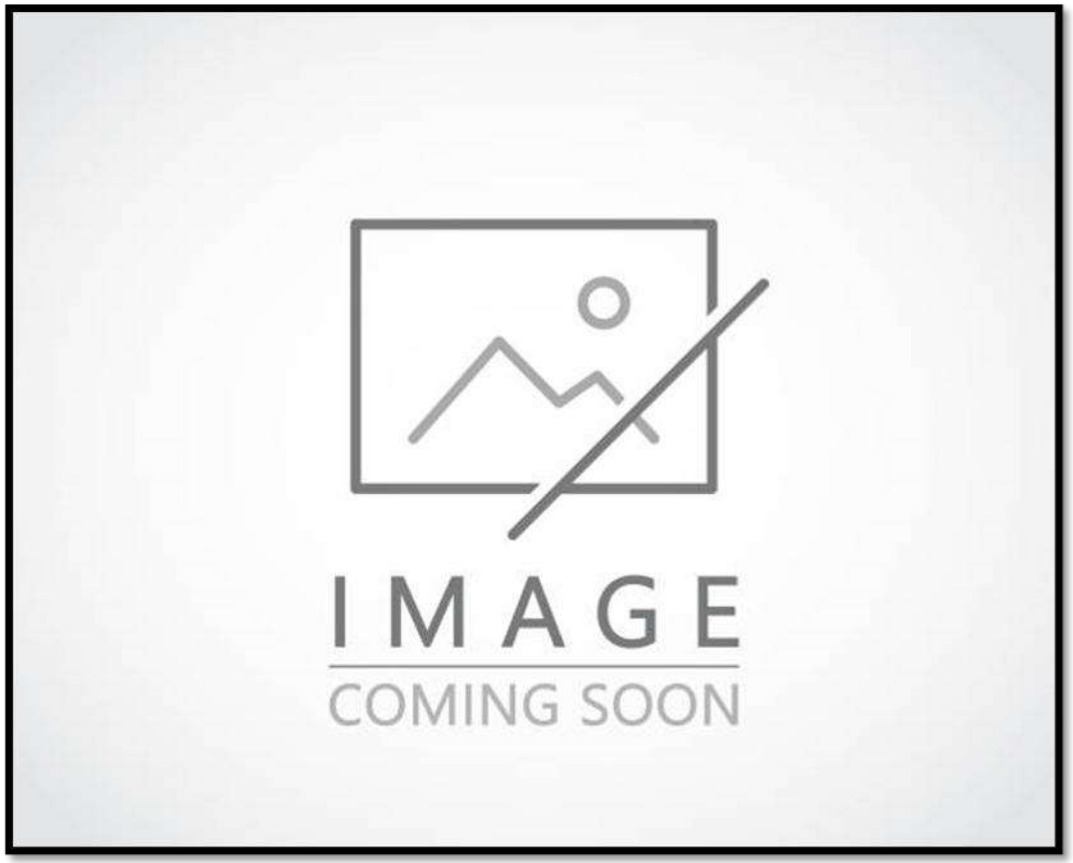

Overall Dimensions:
Core:
Inlet:
Outlet:

ST473

Listed dimensions may vary slightly from OE

ST474

BGR Part Number: ST-0475-6T-NC
CUMMINS NT4968

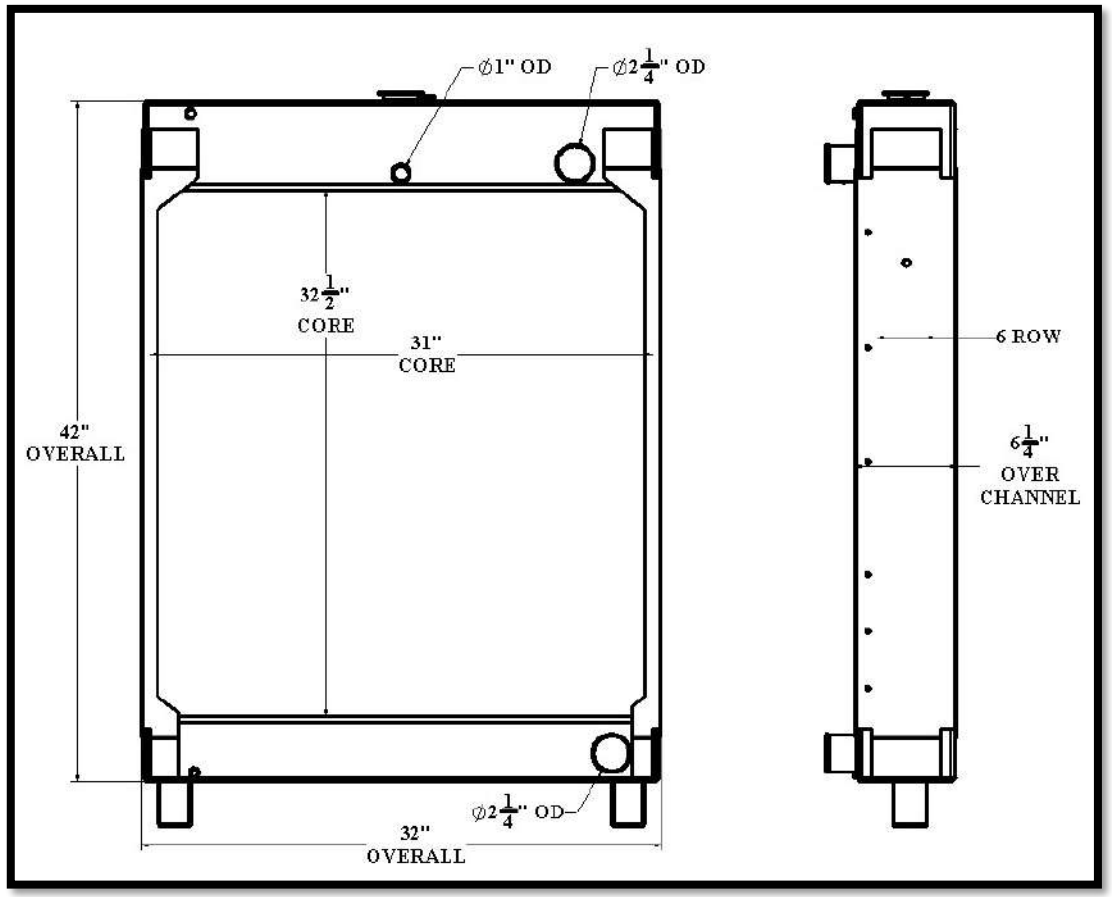

Overall Dimensions: 42” X 32” X 6-1/4”
Core: 32-1/2” X 31” X 6 ROW
Inlet: 2-1/4”, 1”
Outlet: 2-1/4”

Tel 1.800.774.2168
www.bgrradiator.com

BGR Part Number: ST-0476-3M-EF
MN4220003410D, MN4221120583, U45506580, MN42200034313P

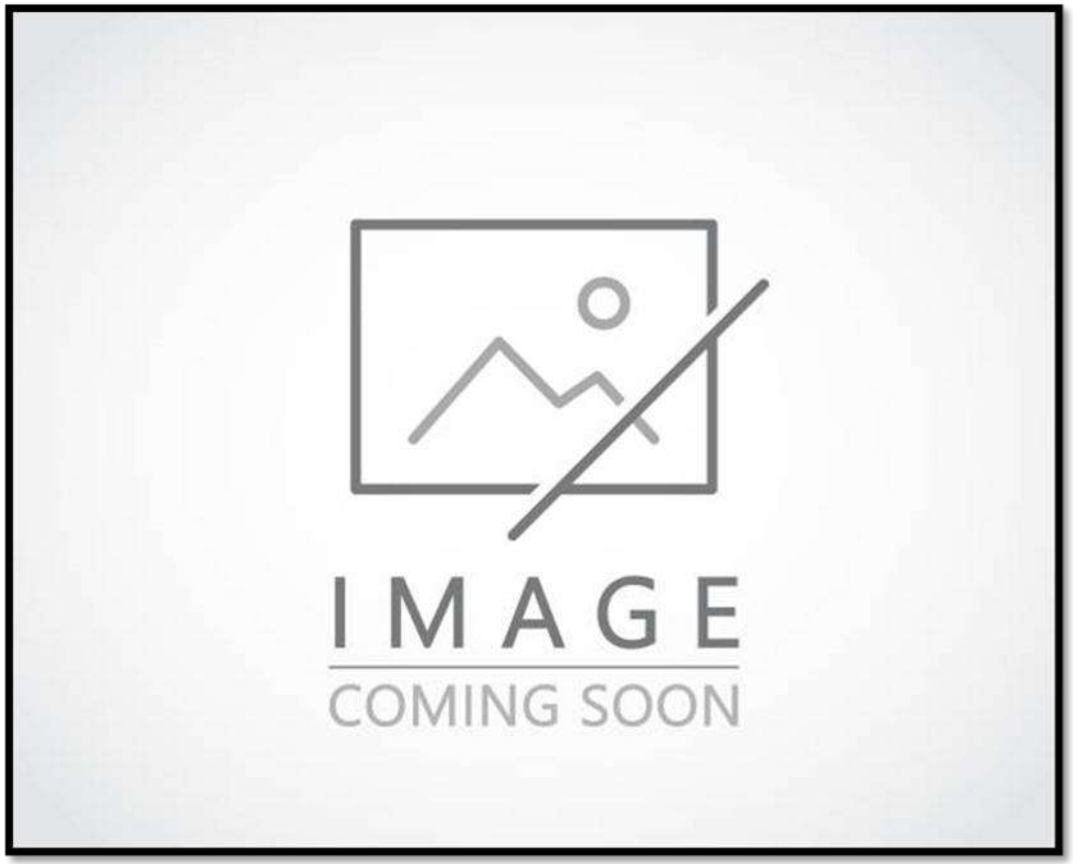

Overall Dimensions:
Core:
Inlet:
Outlet:

Listed dimensions may vary slightly from OE

BGR Part Number: ST-0477-5M-NC
SUA80761

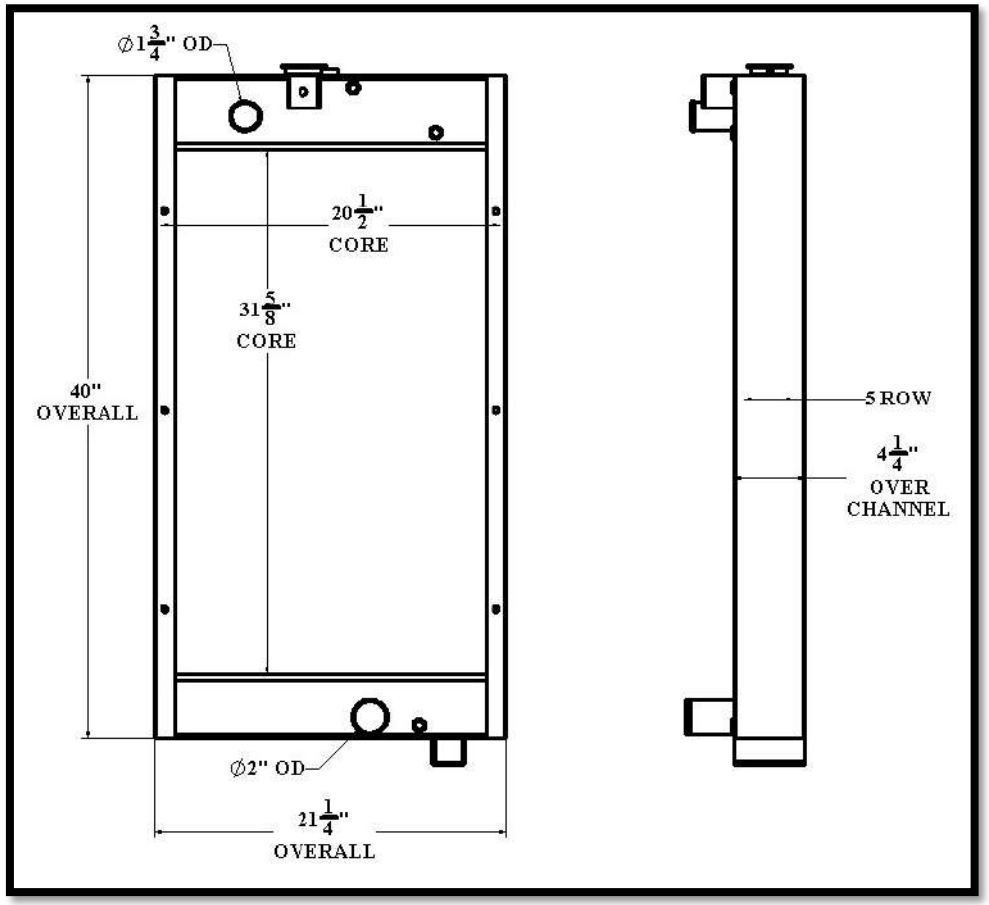

Overall Dimensions: 40” X 21-1/4” X 4-1/4”
Core: 31-5/8” X 20-1/2” X 5 ROW
Inlet: 1-3/4”
Outlet: 2”

Tel 1.800.774.2168
www.bgrradiator.com

BGR Part Number: ST-0478-5M-NC
GM46335

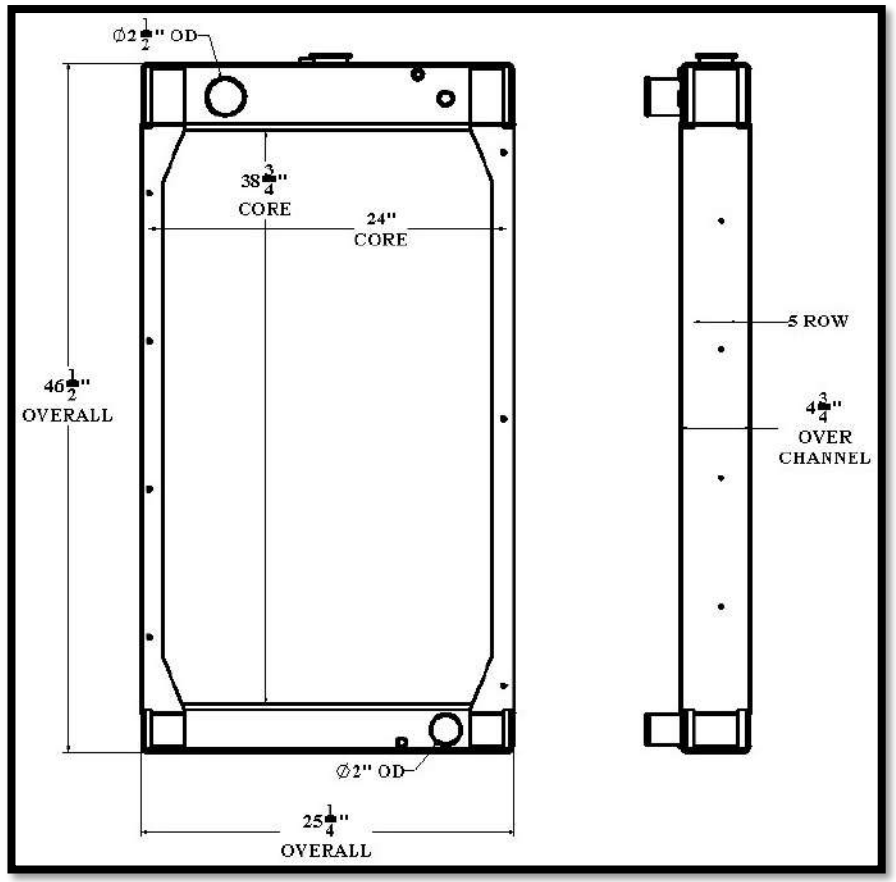

Overall Dimensions: 46-1/2” X 25-1/4” X 4-1/2”
Core: 38-3/4” X 24” X 5 ROW
Inlet: 2-1/2”
Outlet: 2-1/2”

ST477

Listed dimensions may vary slightly from OE

ST478

BGR Part Number: ST-0479-5M-F
130-0449

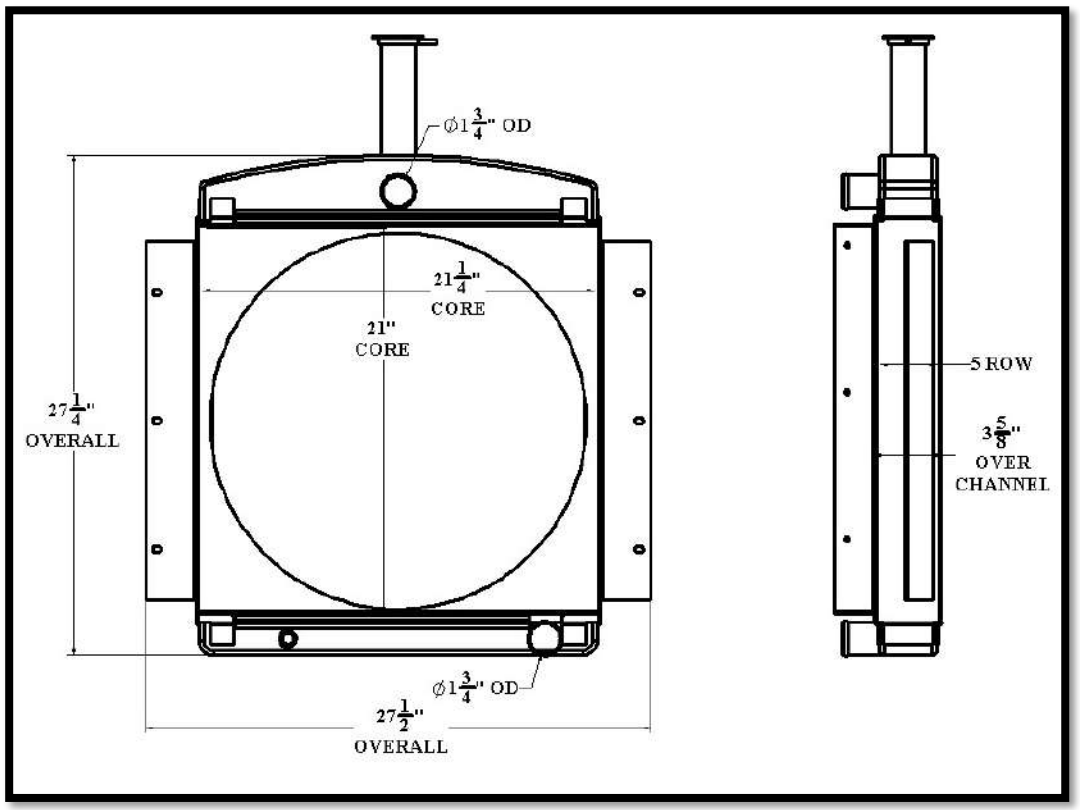

Overall Dimensions: 27-1/4” X 27-1/2” X 3-5/8”
Core: 21” X 21-1/4” X 5 ROW
Inlet: 1-3/4”
Outlet: 1-3/4”

Tel 1.800.774.2168
www.bgrradiator.com

BGR Part Number: ST-0480-3M-EF
CH11964, MN222000-10620P,63694

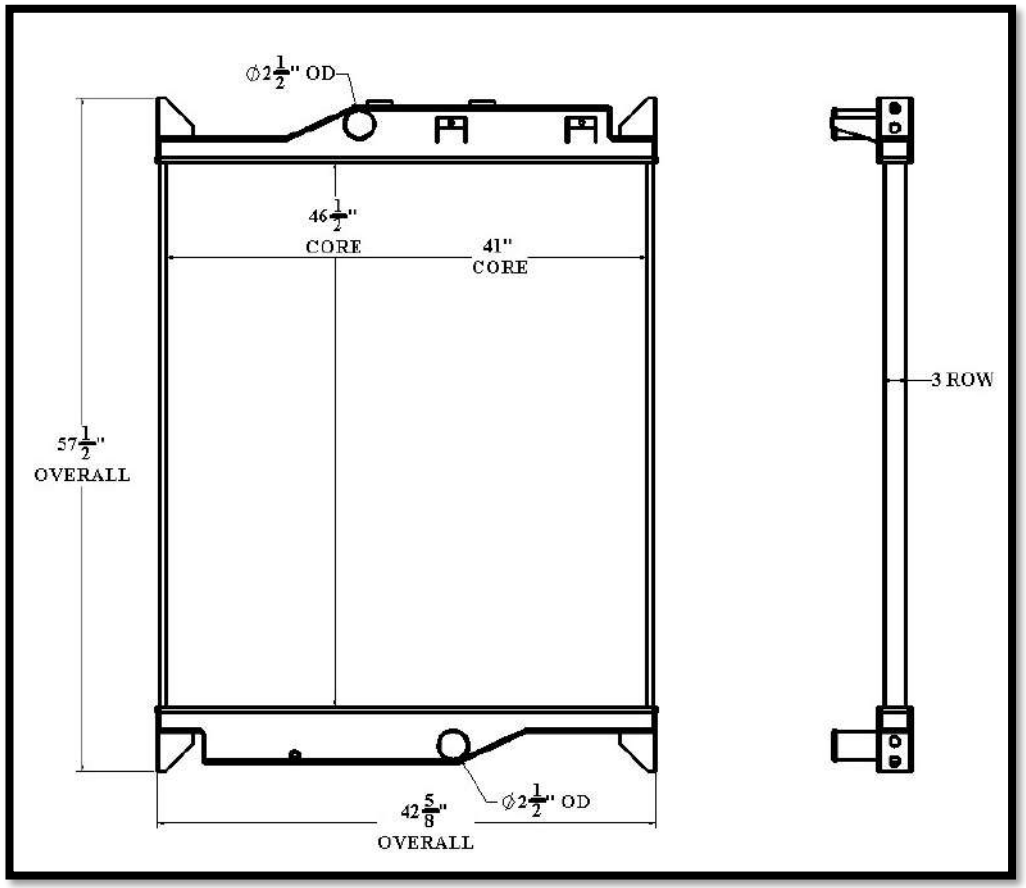

Overall Dimensions: 57-1/2” X 42-5/8”
Core: 46-1/2” X 41” X 3 ROW
Inlet: 2-1/2”
Outlet: 2-1/2”

ST479

Listed dimensions may vary slightly from OE

ST480

BGR Part Number: ST-0481-3M-EF

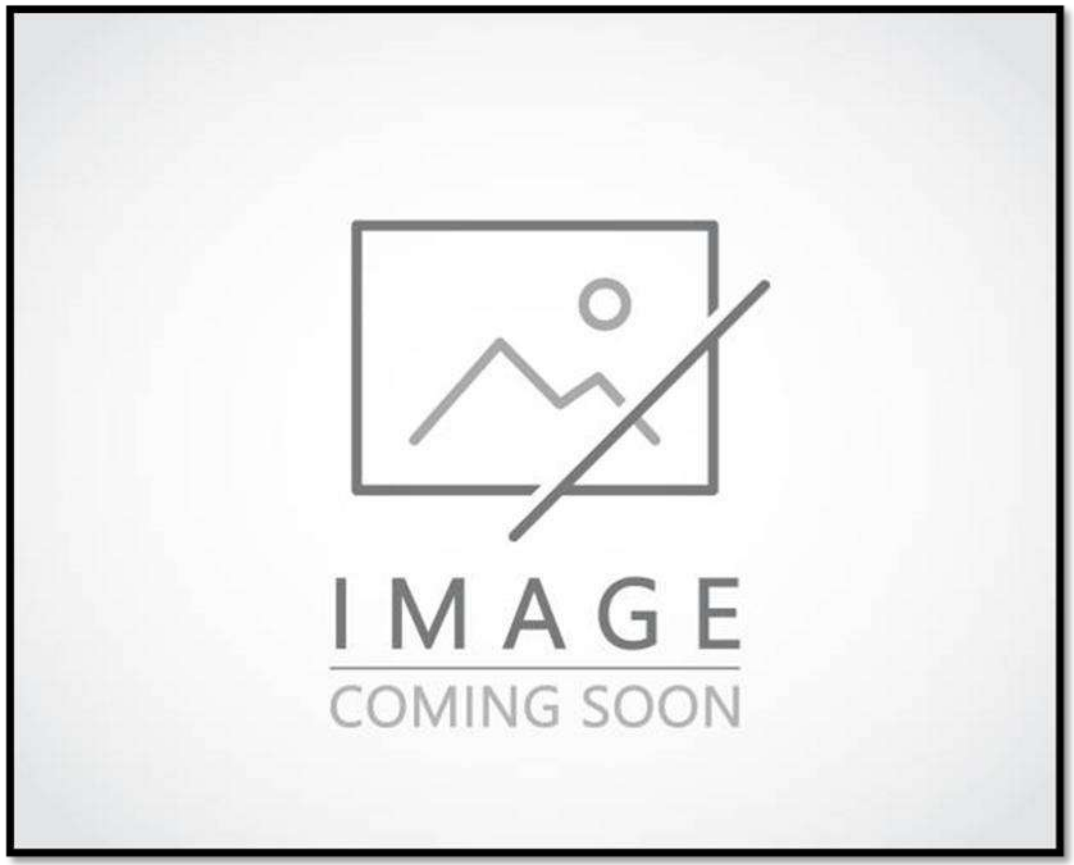

Overall Dimensions:
Core:
Inlet:
Outlet:

Tel 1.800.774.2168
www.bgrradiator.com

BGR Part Number: ST-0482-5M-F
7W4463, 16690, B3341L0

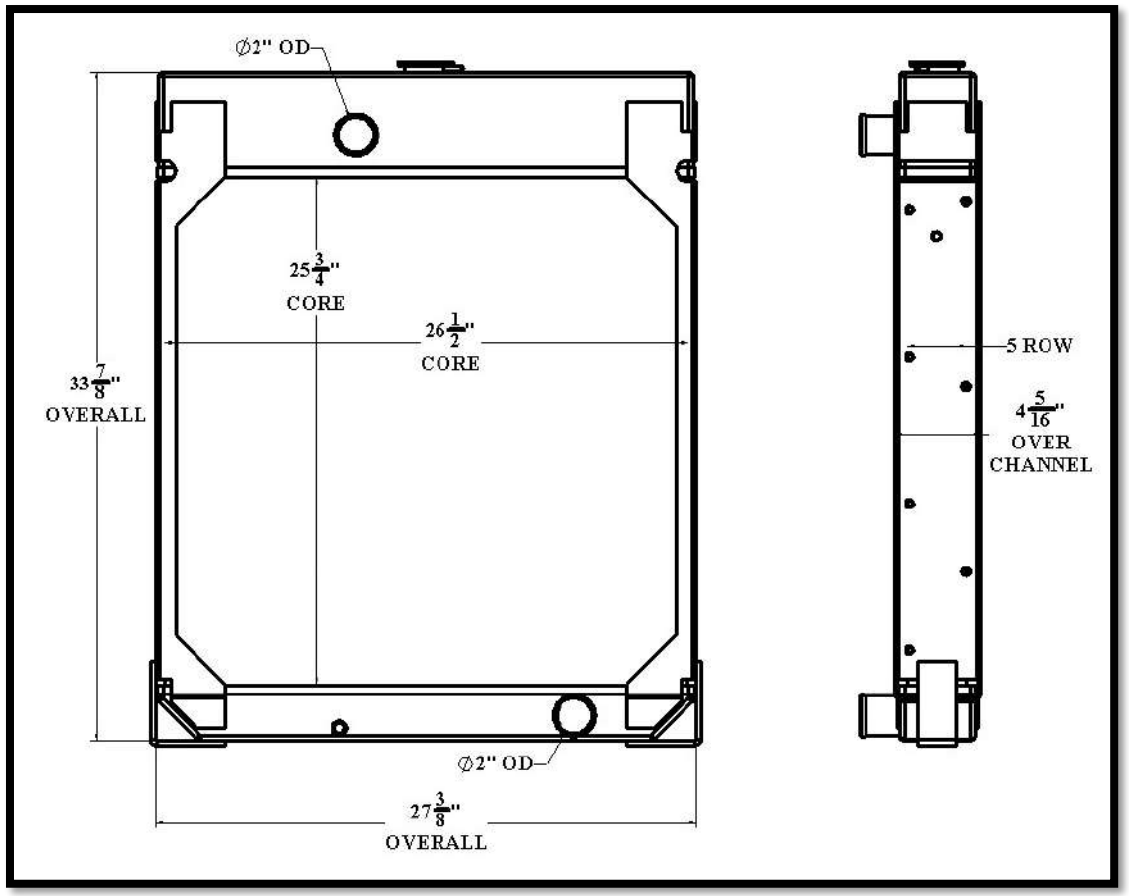

Overall Dimensions: 33-7/8” X 27-3/8” X 4-5/16”
Core: 25-3/4” X 26-1/2” X 5 ROW
Inlet: 2”
Outlet: 2”

Listed dimensions may vary slightly from OE

BGR Part Number: ST-0483-9M-EF

558-4654-00, F6627RO, 23291, 3E0152950000, 0006412

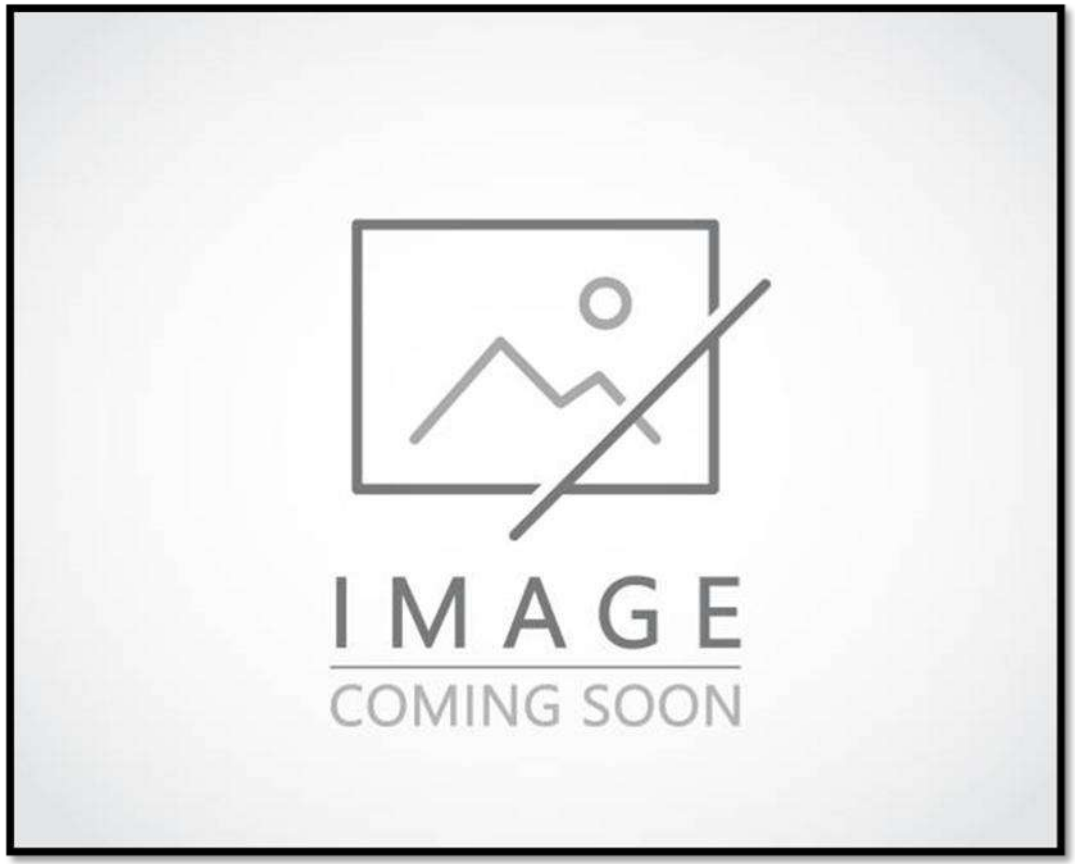

Overall Dimensions:

Core:

Inlet:

Outlet:

Tel 1.800.774.2168
www.bgrradiator.com

BGR Part Number: ST-0484-7M-EF

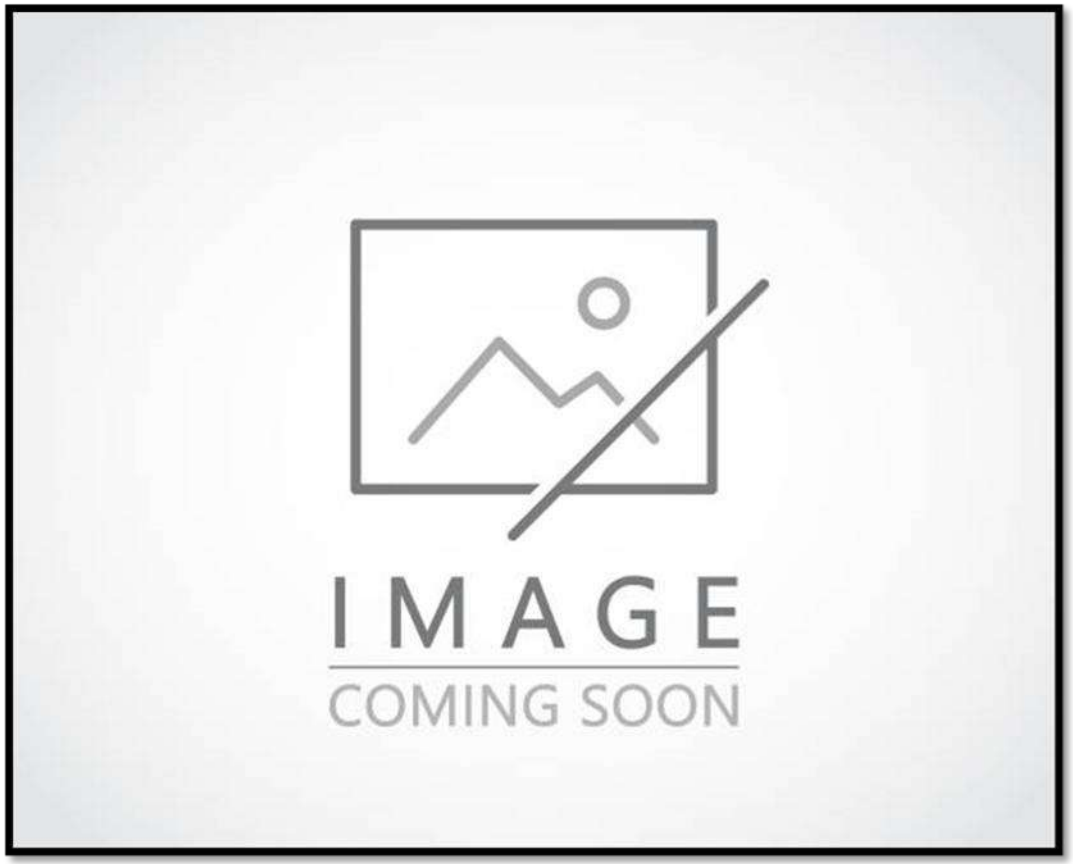

Overall Dimensions:

Core:

Inlet:

Outlet:

Listed dimensions may vary slightly from OE

BGR Part Number: ST-0485-2X-F
0G1286B

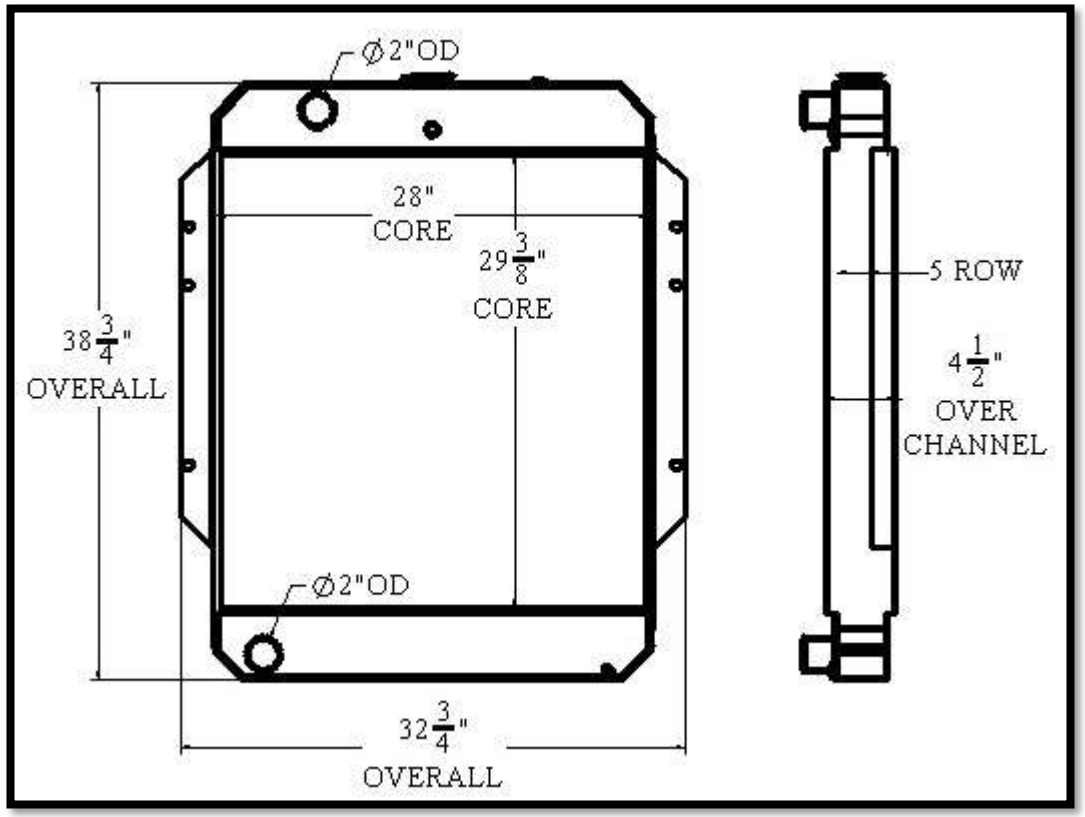

Overall Dimensions: 38-3/4” X 32-3/4” X 4-1/2”
Core: 29-3/8” X 28” X 5 ROW
Inlet: 2”OD
Outlet: 2”OD

ST485

Tel 1.800.774.2168
www.bgrradiator.com

BGR Part Number: ST-0486-3M-F
G073996

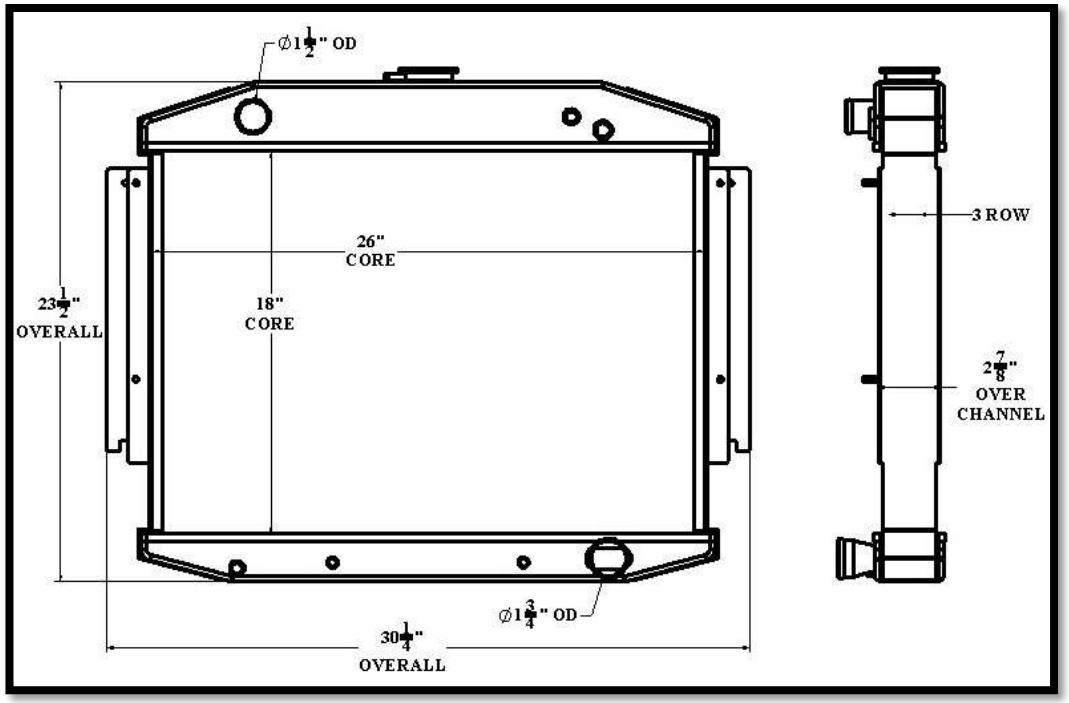

Overall Dimensions:23-1/2” X 30-1/4” X 2-7/8”
Core:18” X 26” X 3 ROW
Inlet: 1-1/2
Outlet:1-3/4

ST486

Listed dimensions may vary slightly from OE

BGR Part Number: ST-0487-3VT-EF
0A1602, CR561

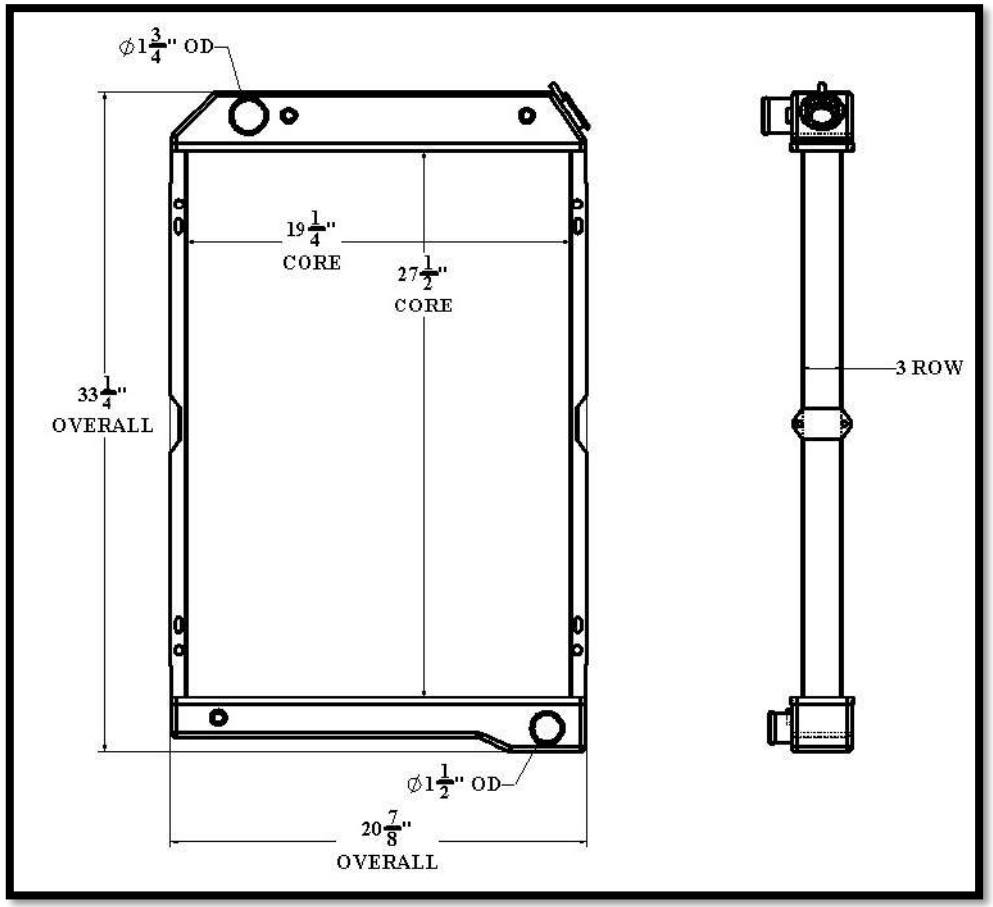

Overall Dimensions: 33-1/4” X 20-7/8”
Core: 27-1/2” X 19-1/4” X 3 ROW
Inlet: 1-3/4”
Outlet: 1-1/2”

Tel 1.800.774.2168
www.bgrradiator.com

BGR Part Number: ST-0488-5M-NC
RS1966

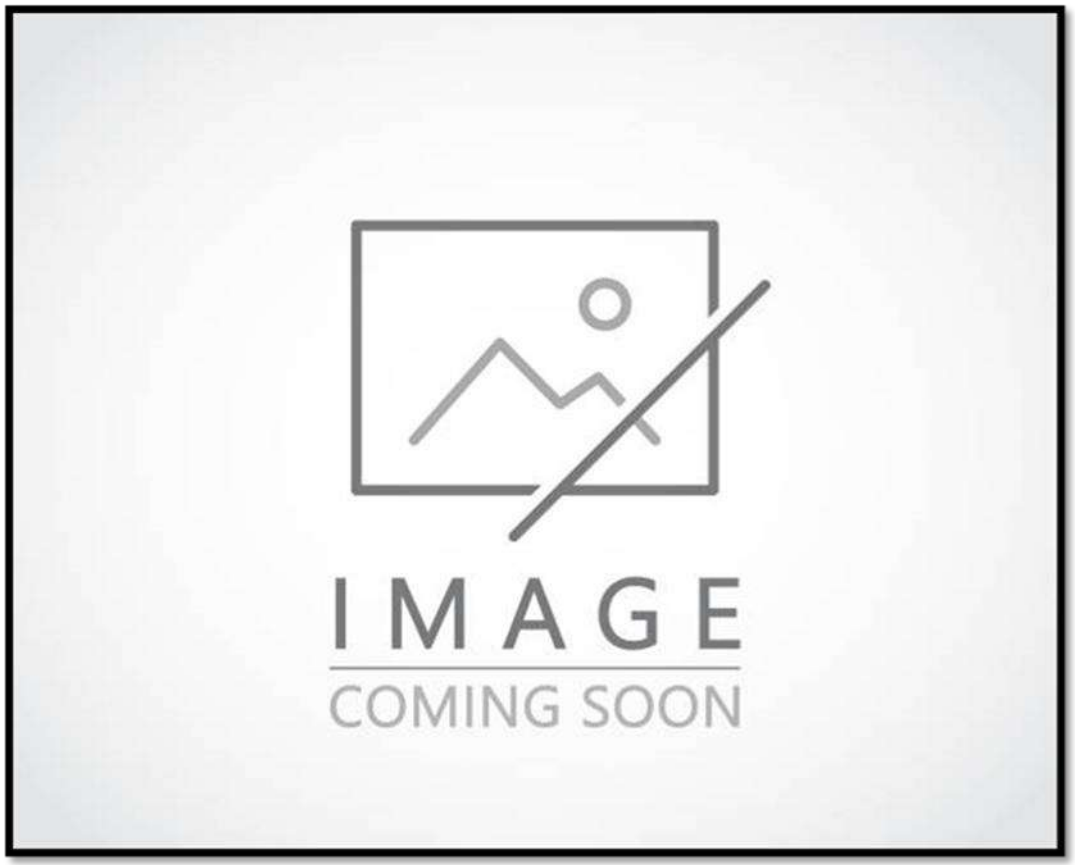

Overall Dimensions:
Core:
Inlet:
Outlet:

Listed dimensions may vary slightly from OE

BGR Part Number: ST-0489-4M-NC
GM52732

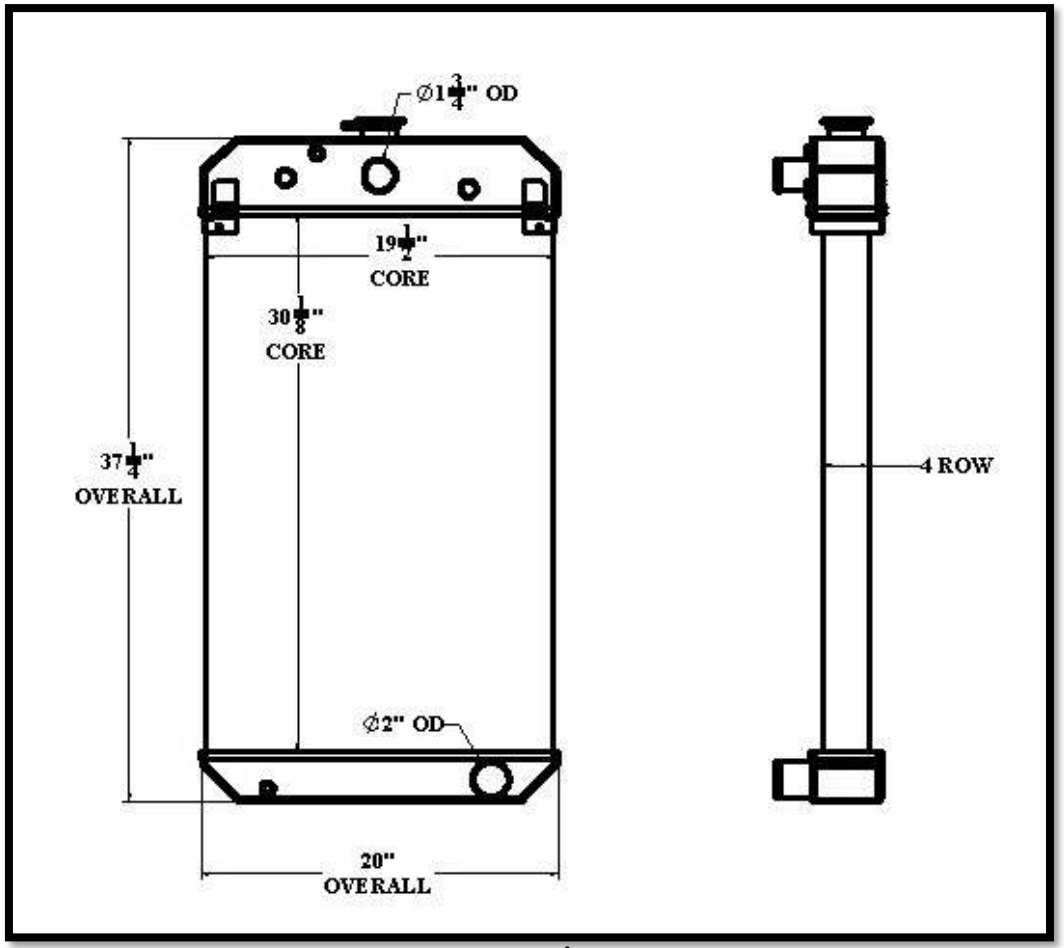

Overall Dimensions: 37-1/4” X 20”
Core:30-1/8” X 19-1/2” X 4 ROW
Inlet: 1-3/4”
Outlet:2”

Tel 1.800.774.2168
www.bgrradiator.com

BGR RADIATOR

BGR Part Number: ST-0490-3M-F
0F28572

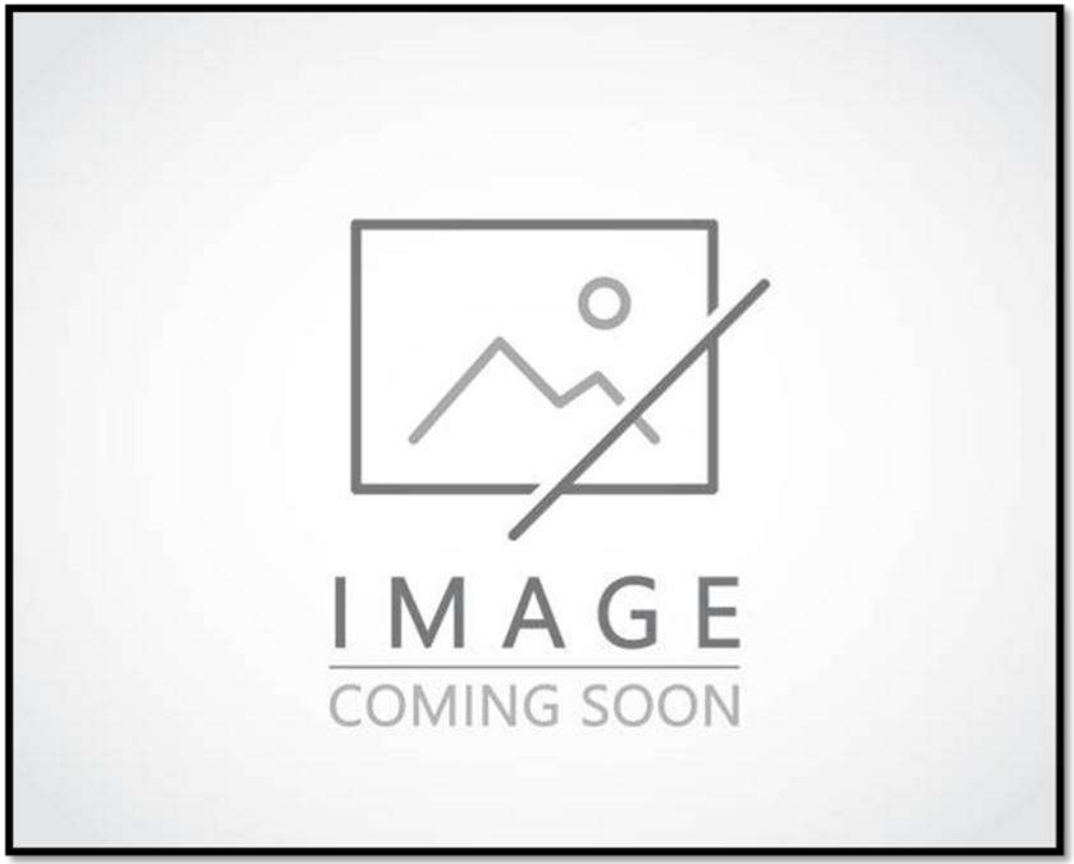

Overall Dimensions:
Core:
Inlet:
Outlet:

ST489

Listed dimensions may vary slightly from OE

ST490

BGR Part Number: ST-0491-4M-EF
05005002, MN2220006124, MN4221339090, 11769, 130-7452

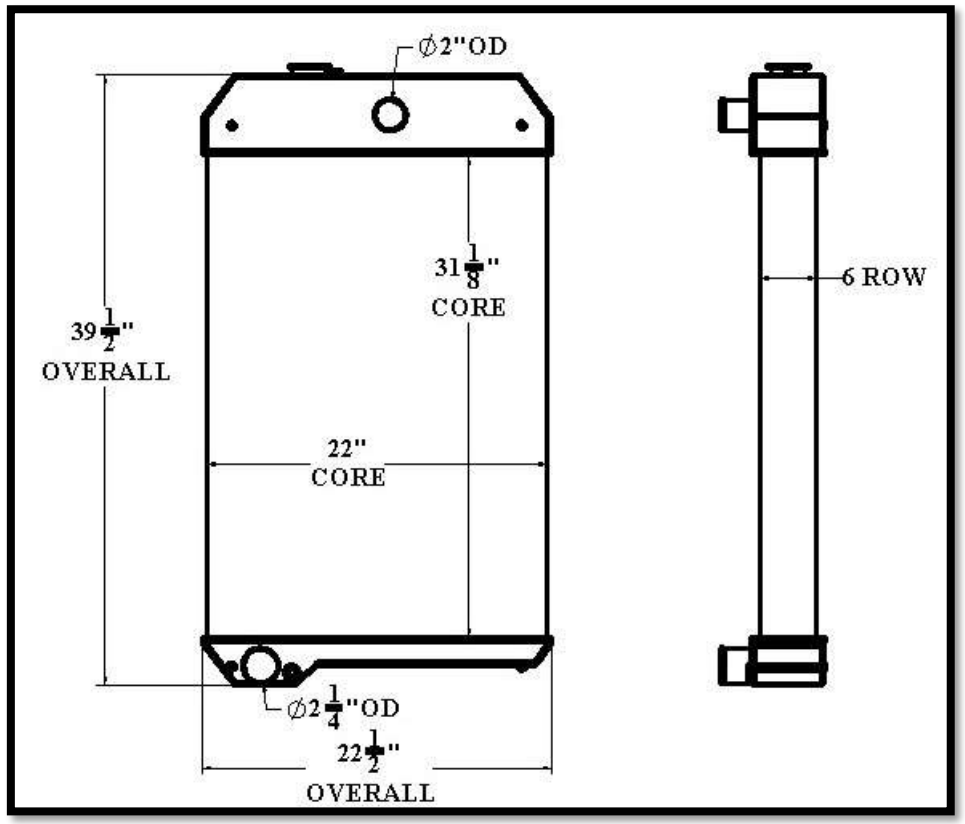

Overall Dimensions: 39-1/2” X 22-1/2”
Core: 31-1/8” X 22” X 6 ROW
Inlet: 2”OD
Outlet: 2-1/4”OD

Tel 1.800.774.2168
www.bgrradiator.com

BGR Part Number: ST-0492-4M-F
10000-77580

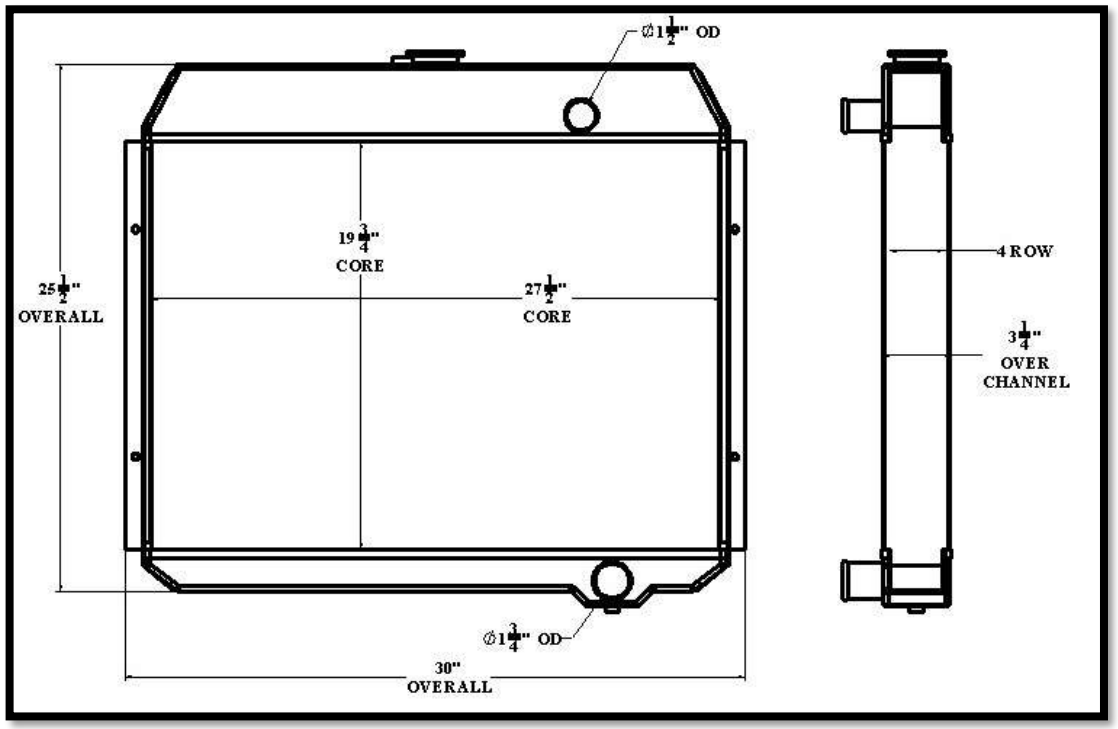

Overall Dimensions: 25-1/2” X 30” X 3-1/4”
Core: 19-3/4” X 27-1/2” X 4 ROW
Inlet: 1-1/2”
Outlet: 1-3/4”

ST491

Listed dimensions may vary slightly from OE

ST492

BGR Part Number: ST-0493-6M-NC

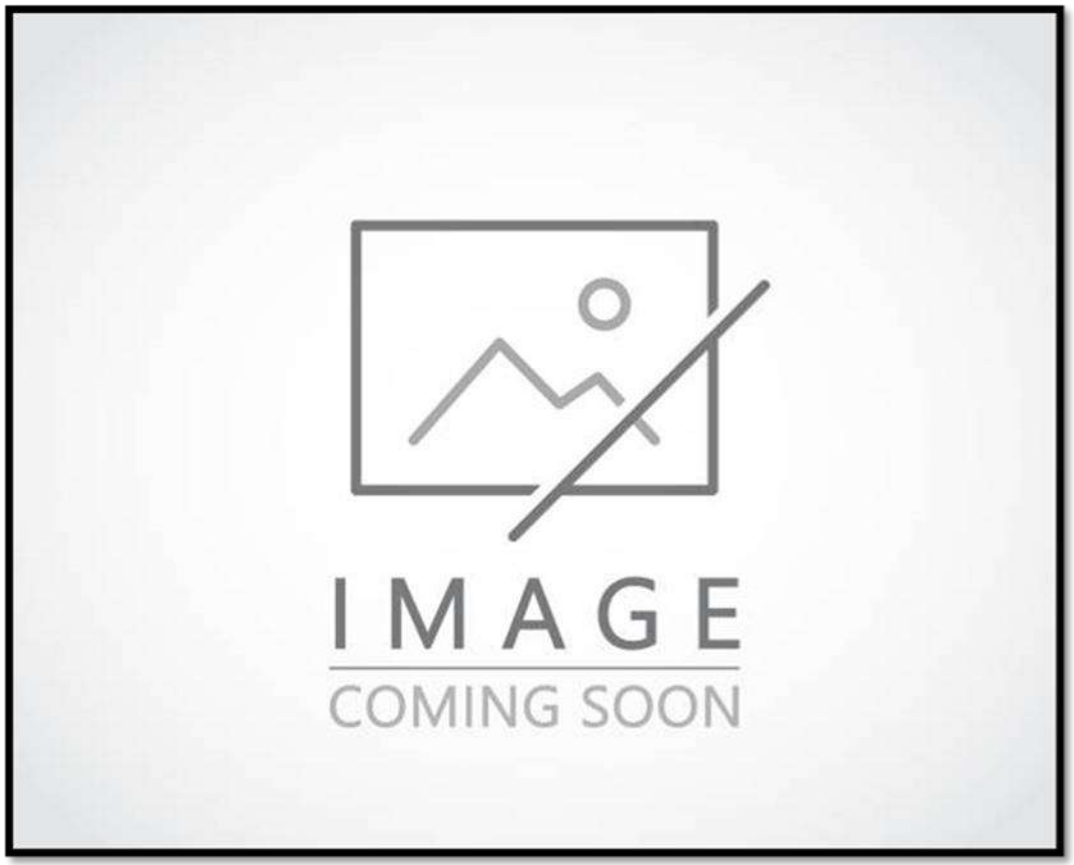

Overall Dimensions:
Core:
Inlet:
Outlet:

ST493

Tel 1.800.774.2168
www.bgrradiator.com

BGR Part Number: ST-0494-2M-NC
M2923200074, 232000652

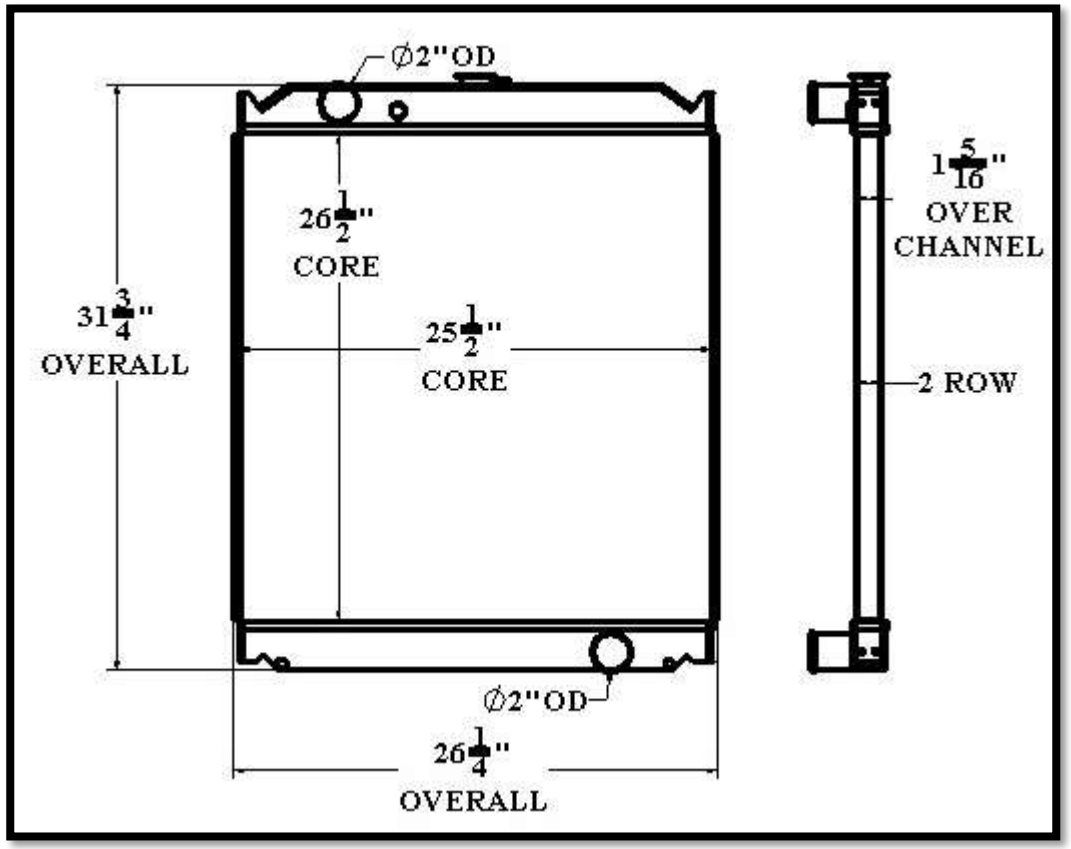

Overall Dimensions: 31-3/4” X 26-1/4” X 1-5/16”
Core: 26-1/2” X 25-1/2” X 2 ROW
Inlet: 2”OD
Outlet: 2”OD

ST494

Listed dimensions may vary slightly from OE

BGR Part Number: ST-0495-4M-NC
D-63820

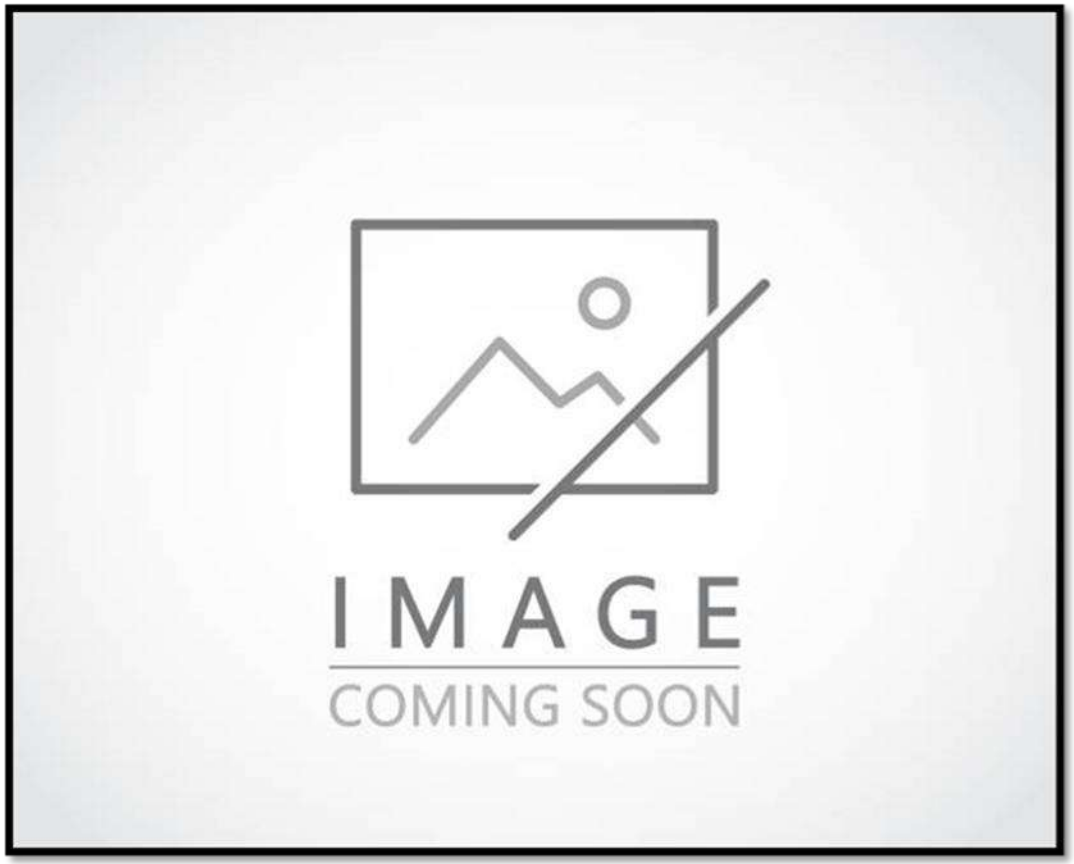

Overall Dimensions:
Core:
Inlet:
Outlet:

Tel 1.800.774.2168
www.bgrradiator.com

BGR Part Number: ST-0496-5I-NC
Cummins 500FOC41DA

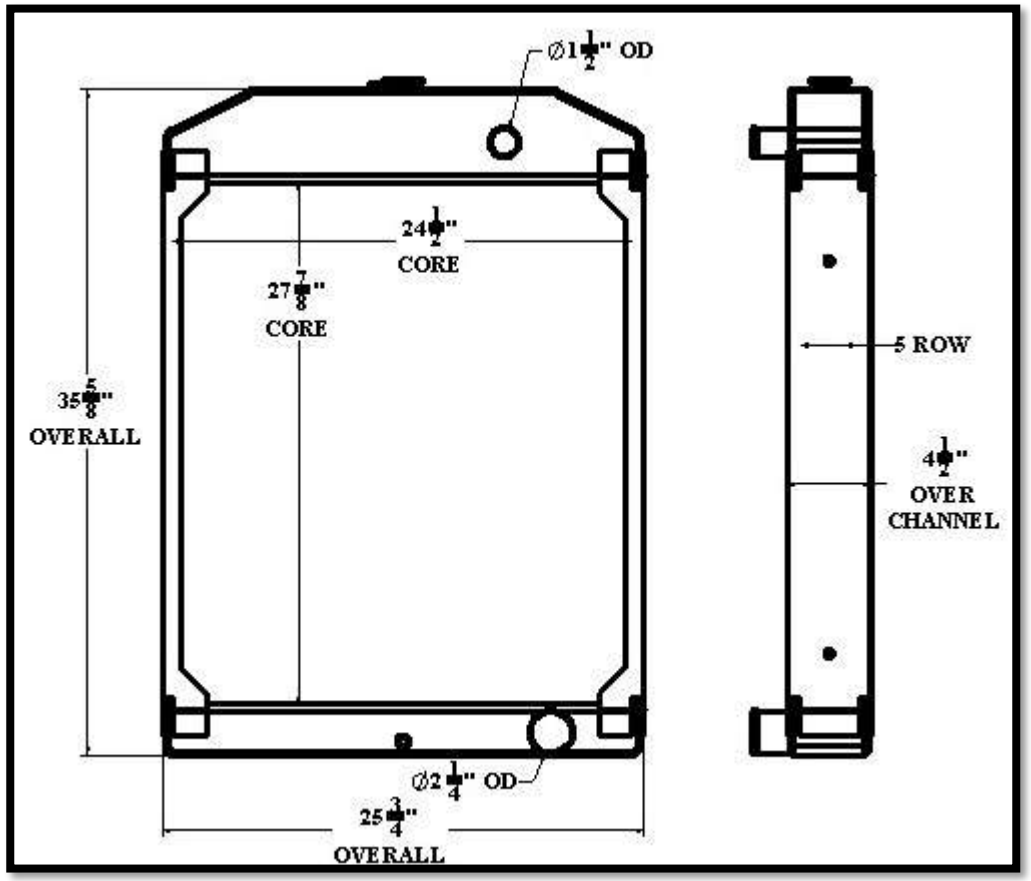

Overall Dimensions:35-5/8” X 25-3/4” X 4-1/2”
Core:27-7/8” X 24-1/2” X 5 ROW
Inlet: 1-1/2”OD
Outlet: 2-1/4”OD

ST495

Listed dimensions may vary slightly from OE

ST496

BGR Part Number: ST-0497-6M-NC
D-63820

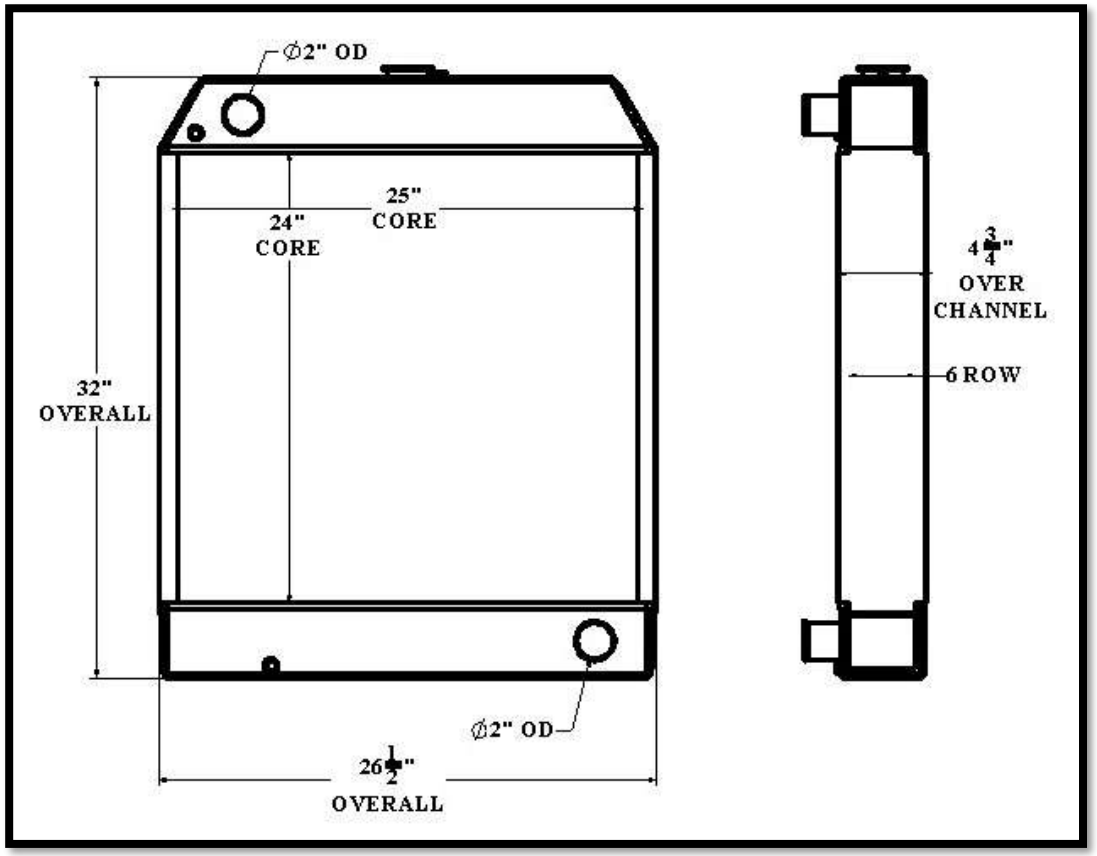

Overall Dimensions:32” X 26-1/2” X 4-3/4”
Core:24” X 25” X 6 ROW
Inlet: 2”
Outlet:2”

Tel 1.800.774.2168
www.bgrradiator.com

BGR Part Number: ST-0498-4M-EF
30651

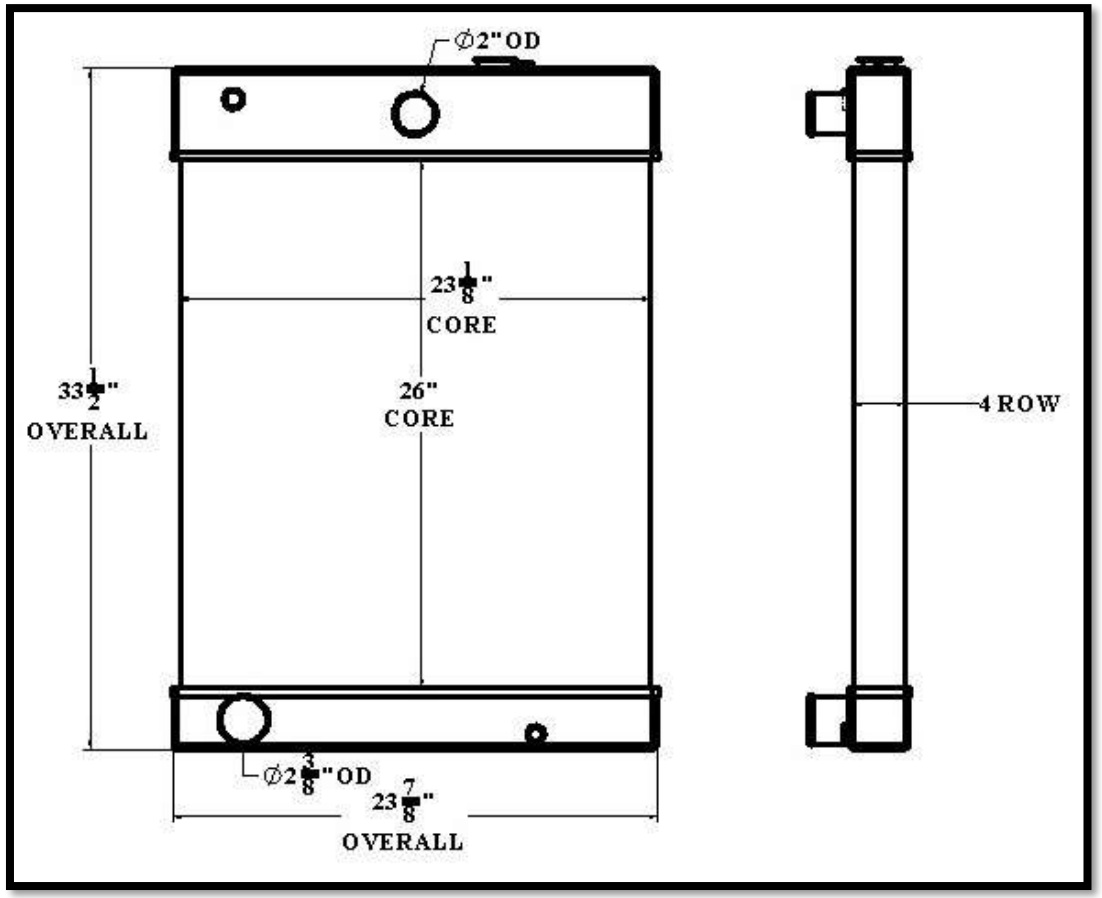

Overall Dimensions:33-1/2” X 23-7/8”
Core:26” X 23-1/8” X 4 ROW
Inlet: 2”
Outlet:2-3/8”

ST497

Listed dimensions may vary slightly from OE

ST498

BGR Part Number: ST-0499-6M-EF
RS-6108 REV C, 70905-02-017

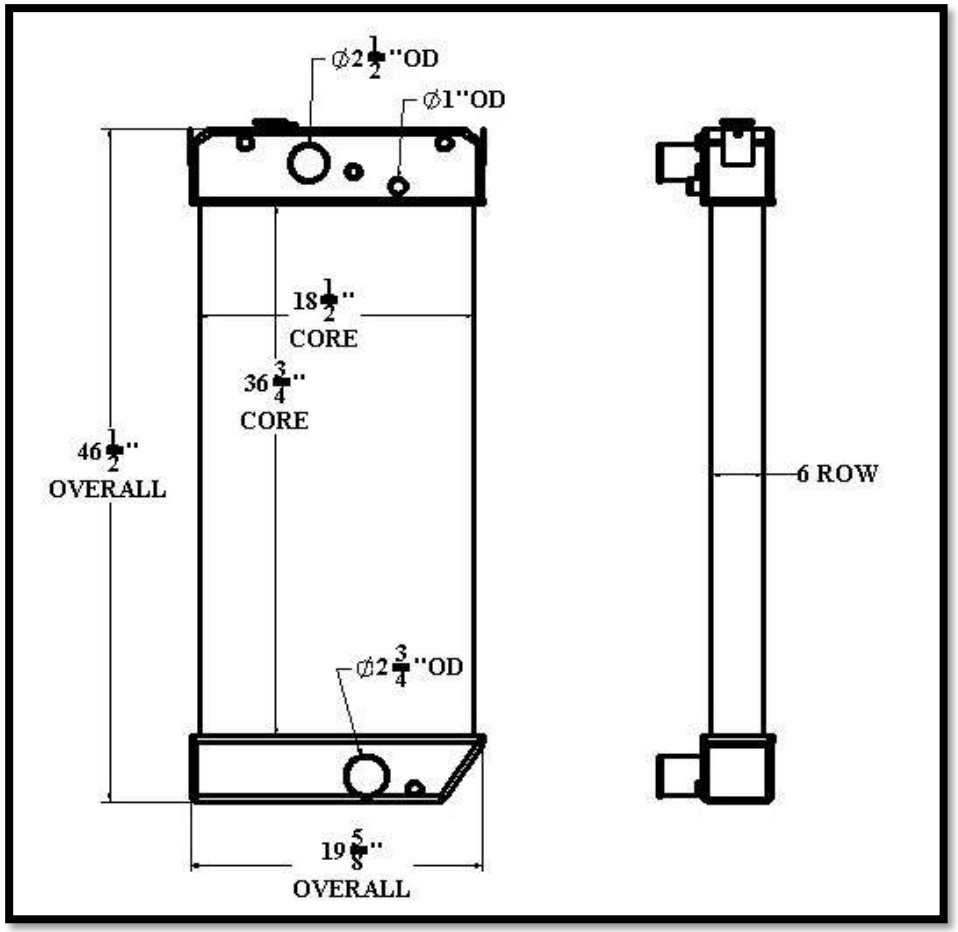

Overall Dimensions:46-1/2” X 19-5/8
Core:36-3/4” X 18-1/2” X 6 ROW
Inlet: 2-1/2”OD, 1” OD
Outlet:2-3/4”OD

Tel 1.800.774.2168
www.bgrradiator.com

BGR Part Number: ST-0500-3M-F
120.1301.100-1, 0G1286C, 14140

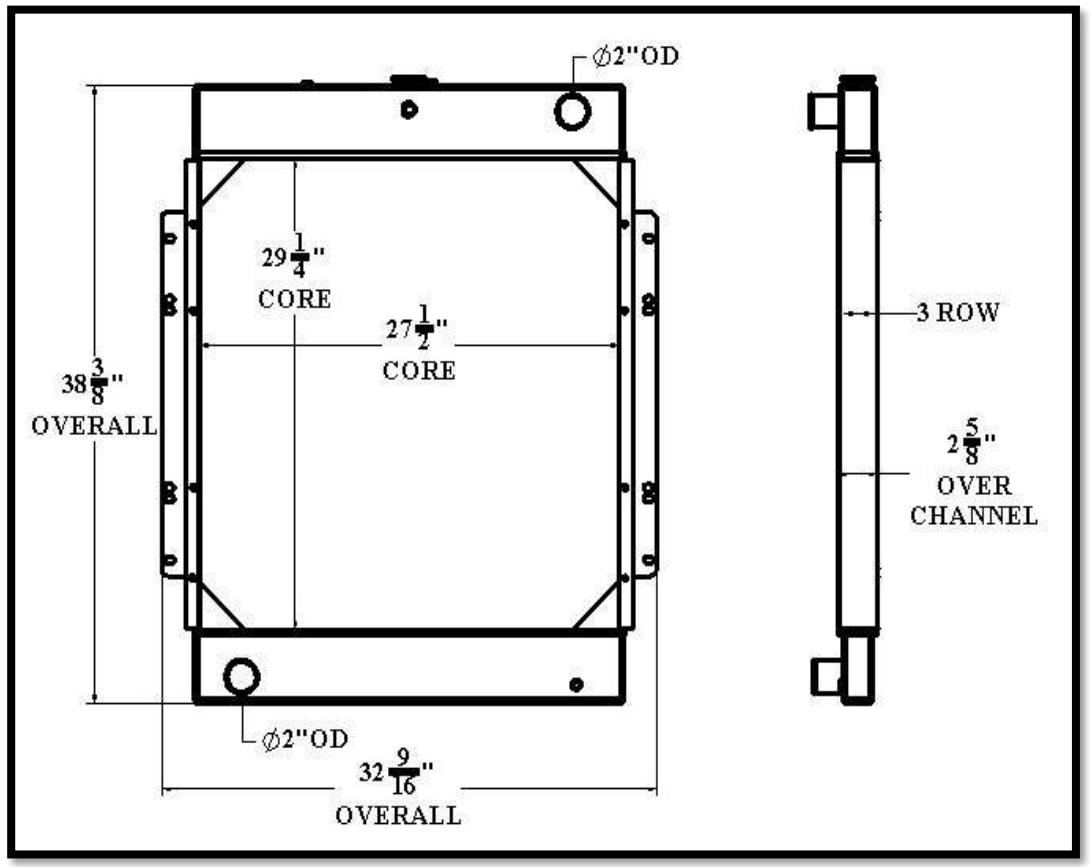

Overall Dimensions:38-3/8” X 32-9/16” X 2-5/8”
Core:29-1/4” X 27-1/2” X 3 ROW
Inlet:2”OD
Outlet:2”OD

ST499

Listed dimensions may vary slightly from OE

ST500

BGR Part Number: ST-0501-7M-NC
SKG 0705/3

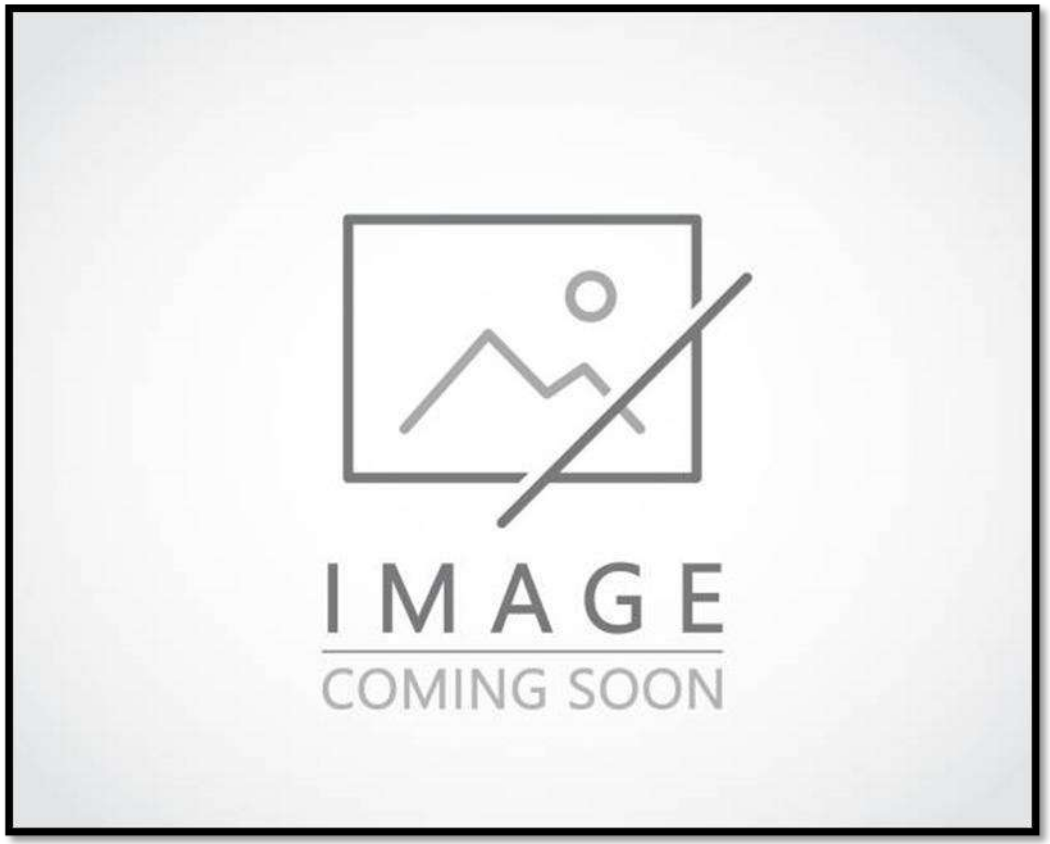

Overall Dimensions:
Core:
Inlet:
Outlet:

Tel 1.800.774.2168
www.bgrradiator.com

BGR Part Number: ST-0502-5M-F
Detroit Diesel

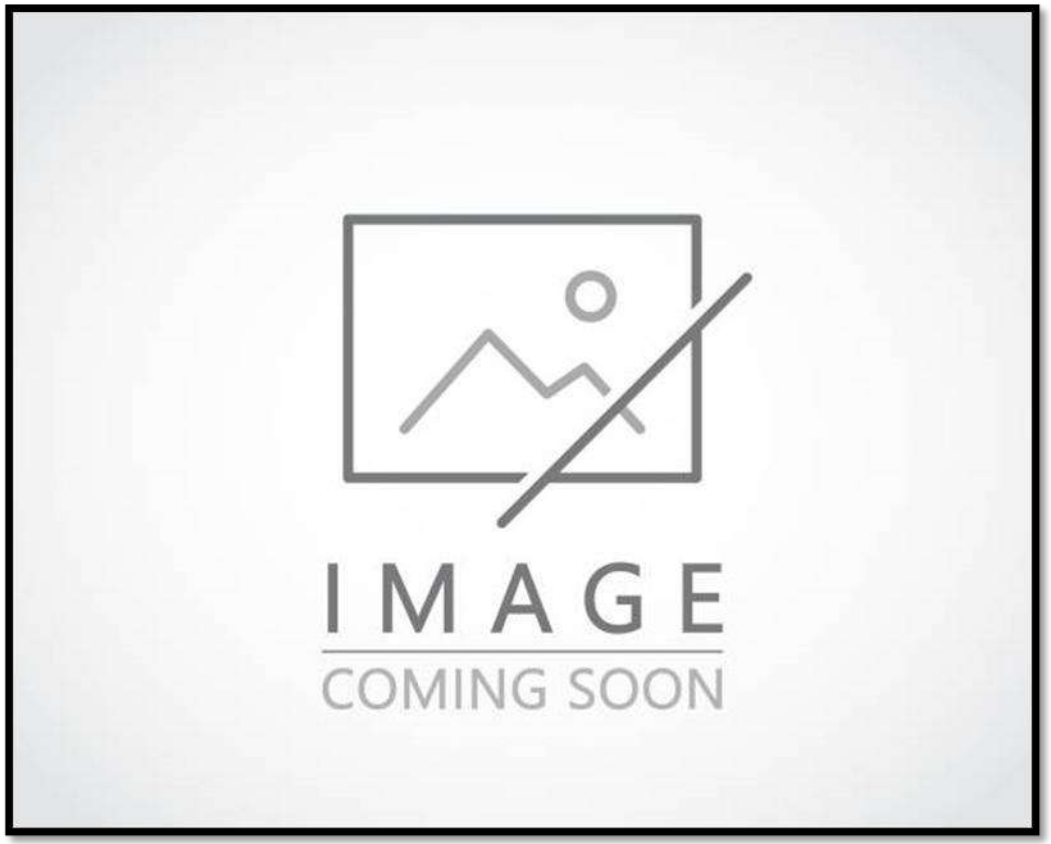

Overall Dimensions:
Core:
Inlet:
Outlet:

Listed dimensions may vary slightly from OE

BGR Part Number: ST-0503-3M-F
CPL-70.1301.100

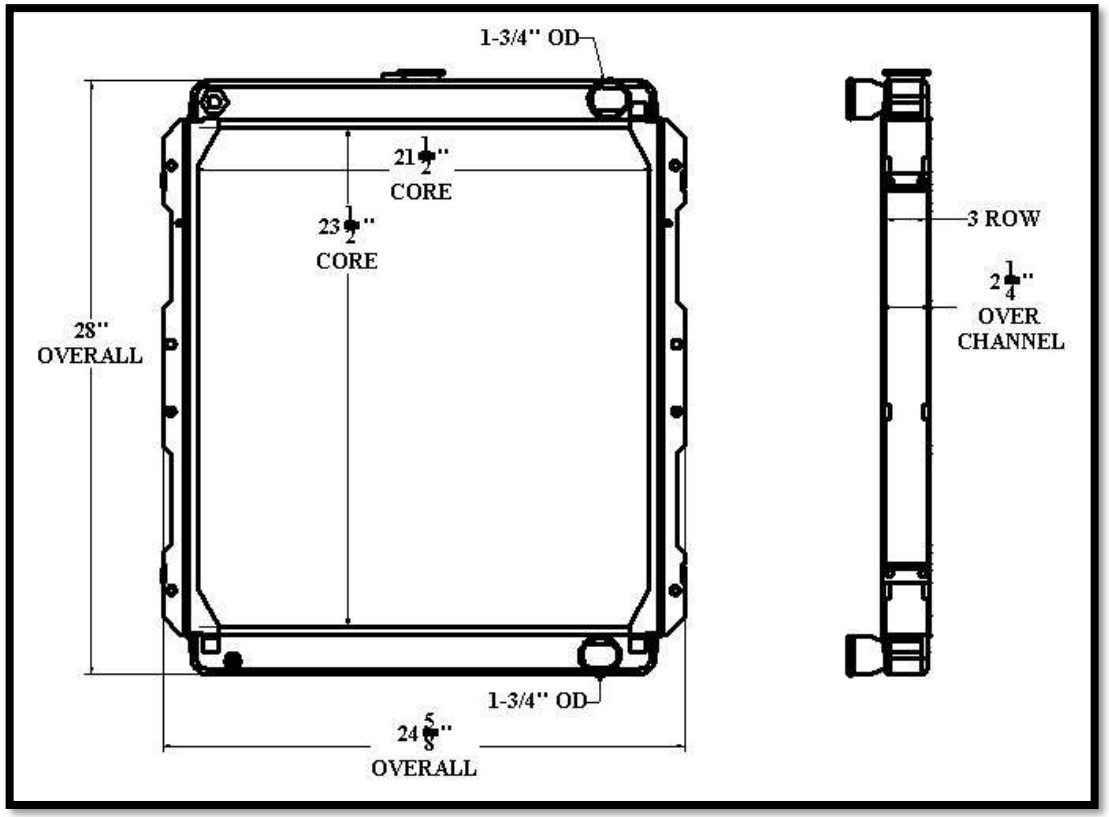

Tel 1.800.774.2168
www.bgrradiator.com

BGR Part Number: ST-0504-6M-F
JOSEPHSON MFG COMPANY 71291

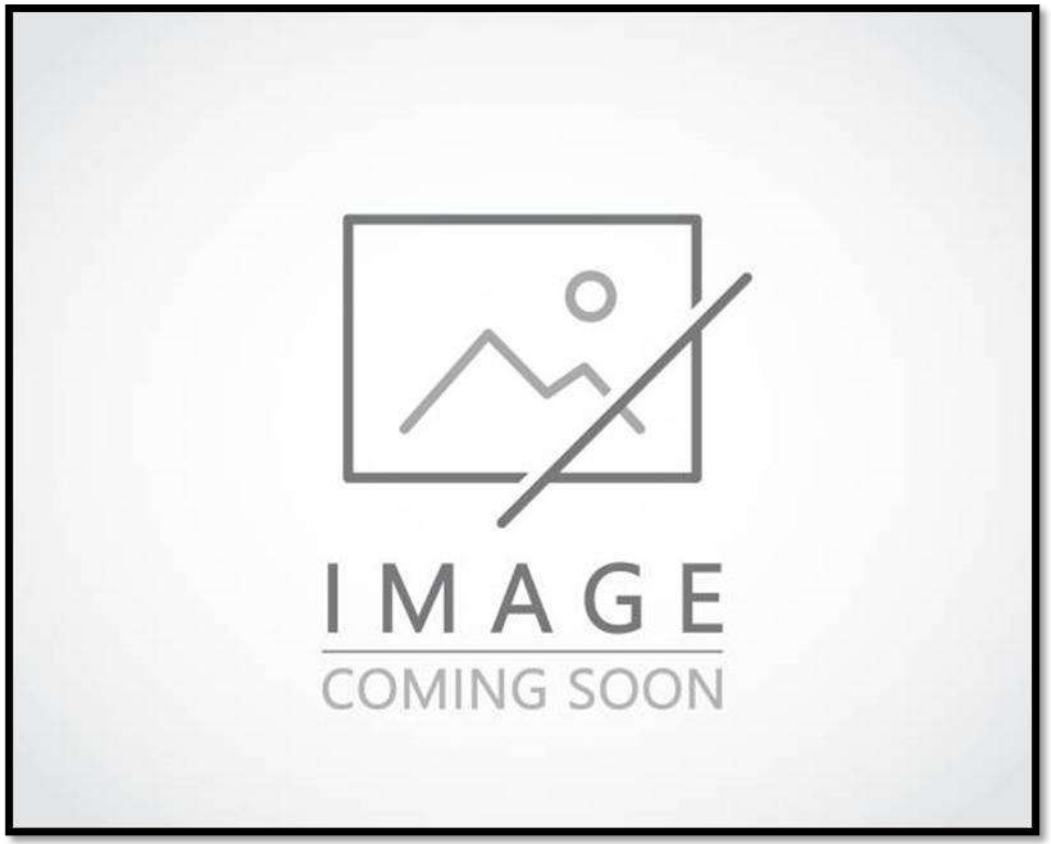

Overall Dimensions: 28” X 24-5/8” X 2-1/4”
Core: 23-1/2” X 21-1/2” X 3 ROW
Inlet: 1-3/4”OD
Outlet: 1-3/4”OD

Overall Dimensions:
Core:
Inlet:
Outlet:

ST503

Listed dimensions may vary slightly from OE

ST504

BGR Part Number: ST-0505-5M-F
Winco 935KDS

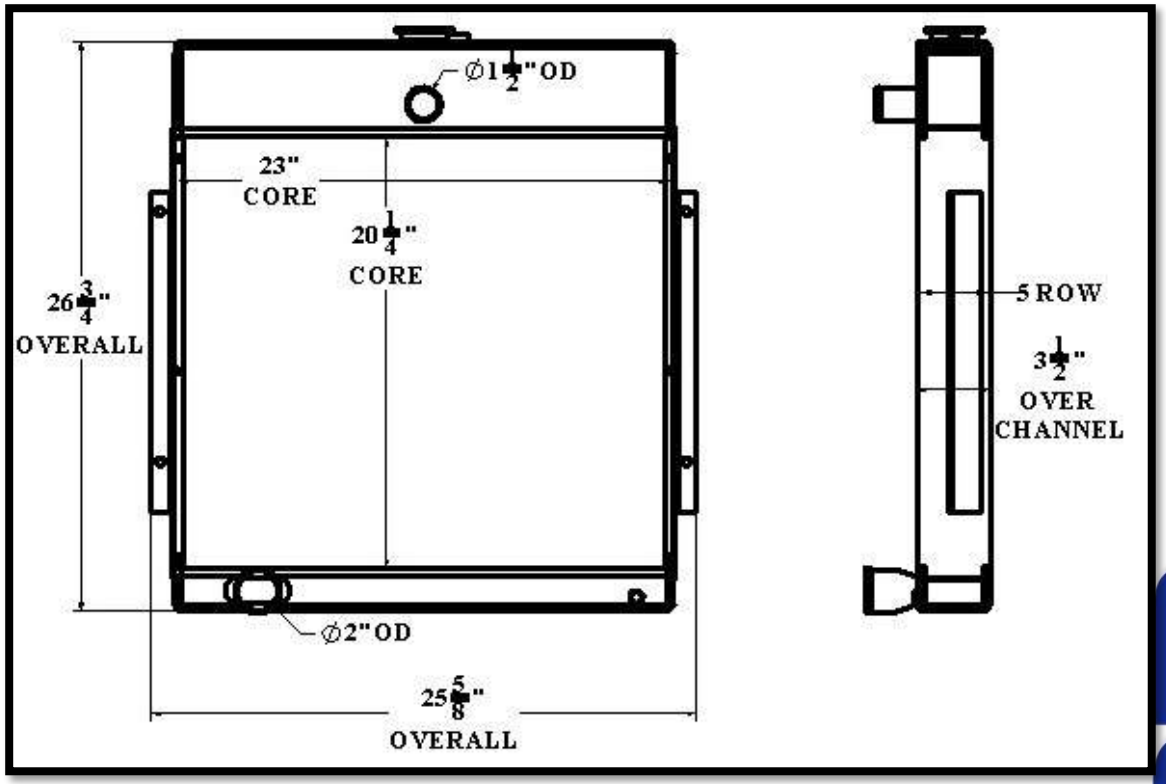

Overall Dimensions:26-3/4” X 25-5/8” X 3-1/2”
Core:20-1/4” X 23” X 5 ROW
Inlet: 1-1/2”OD
Outlet:2”OD

ST505

Tel 1.800.774.2168
www.bgrradiator.com

BGR Part Number: ST-0506-4M-NC
DETROIT 13473

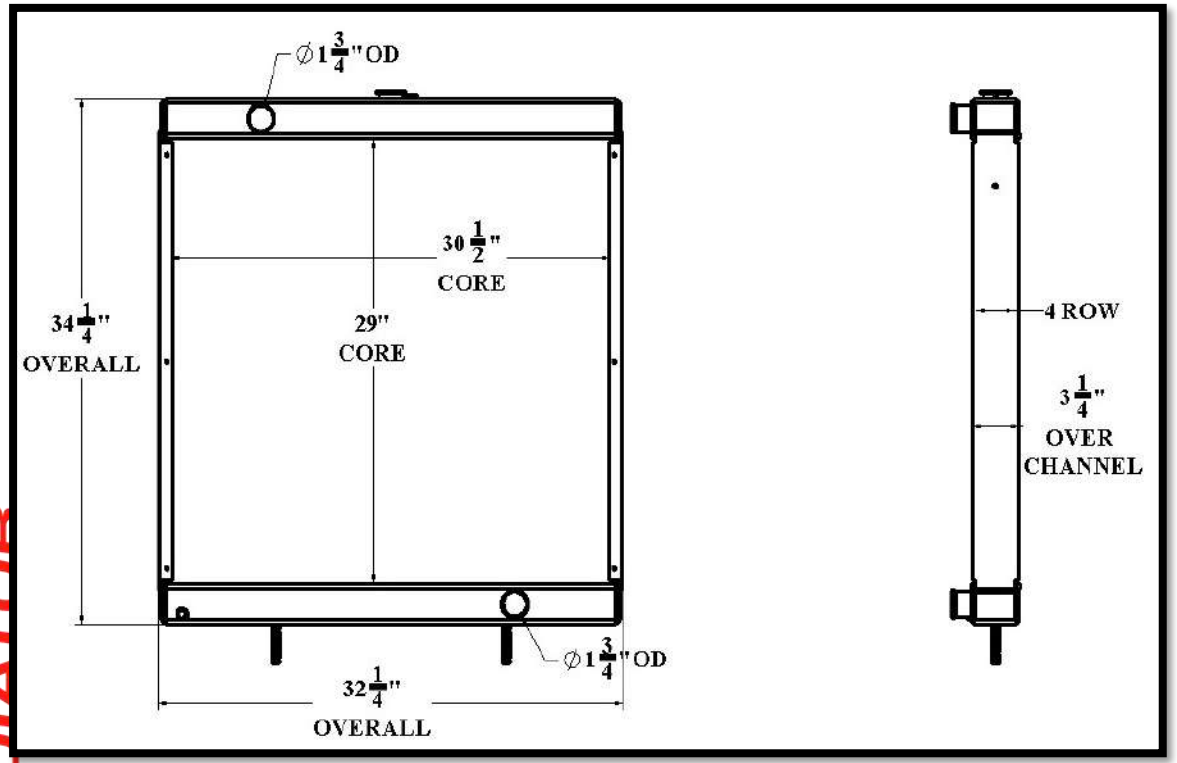

Overall Dimensions:34-1/4” X 32-1/4” X 3-1/4”
Core:29” X 30-1/2” X 4 ROW
Inlet: 1-3/4”OD
Outlet:1-3/4”OD

ST506

Listed dimensions may vary slightly from OE

BGR Part Number: ST-0507-5M-NC
1A15210, MODINE 031238

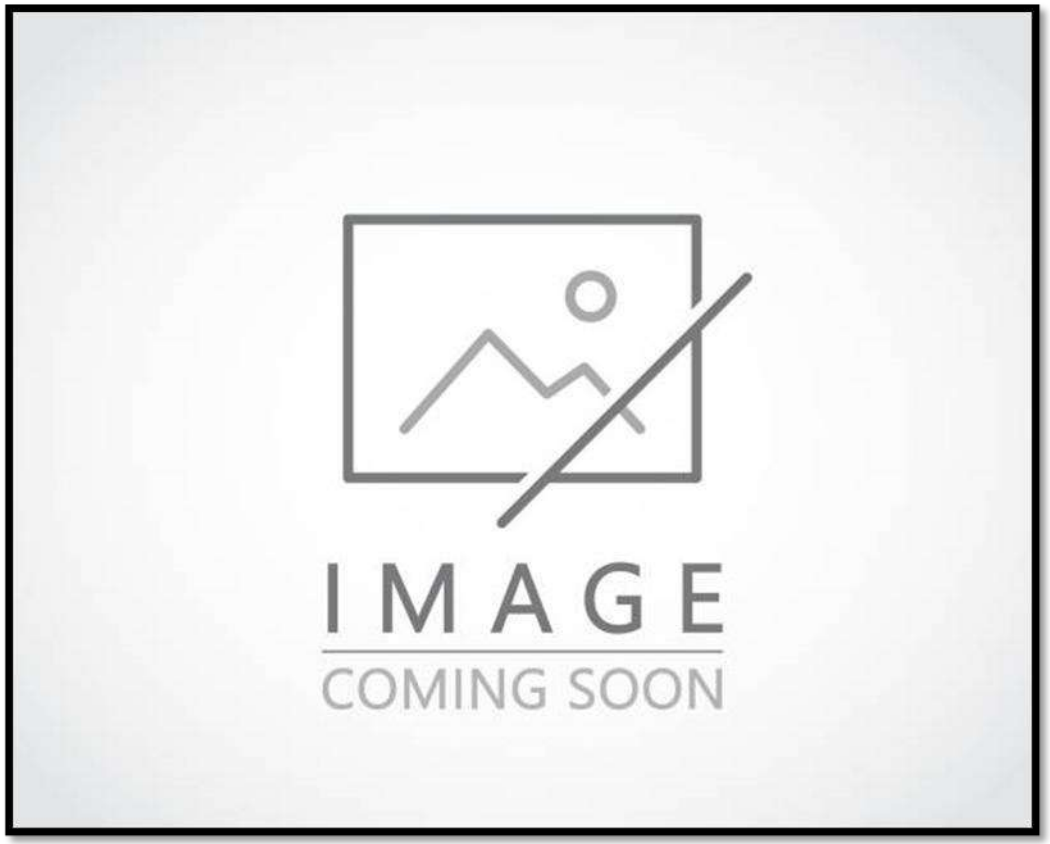

Overall Dimensions:
Core:
Inlet:
Outlet:

Tel 1.800.774.2168
www.bgrradiator.com

BGR Part Number: ST-0508-5M-NC

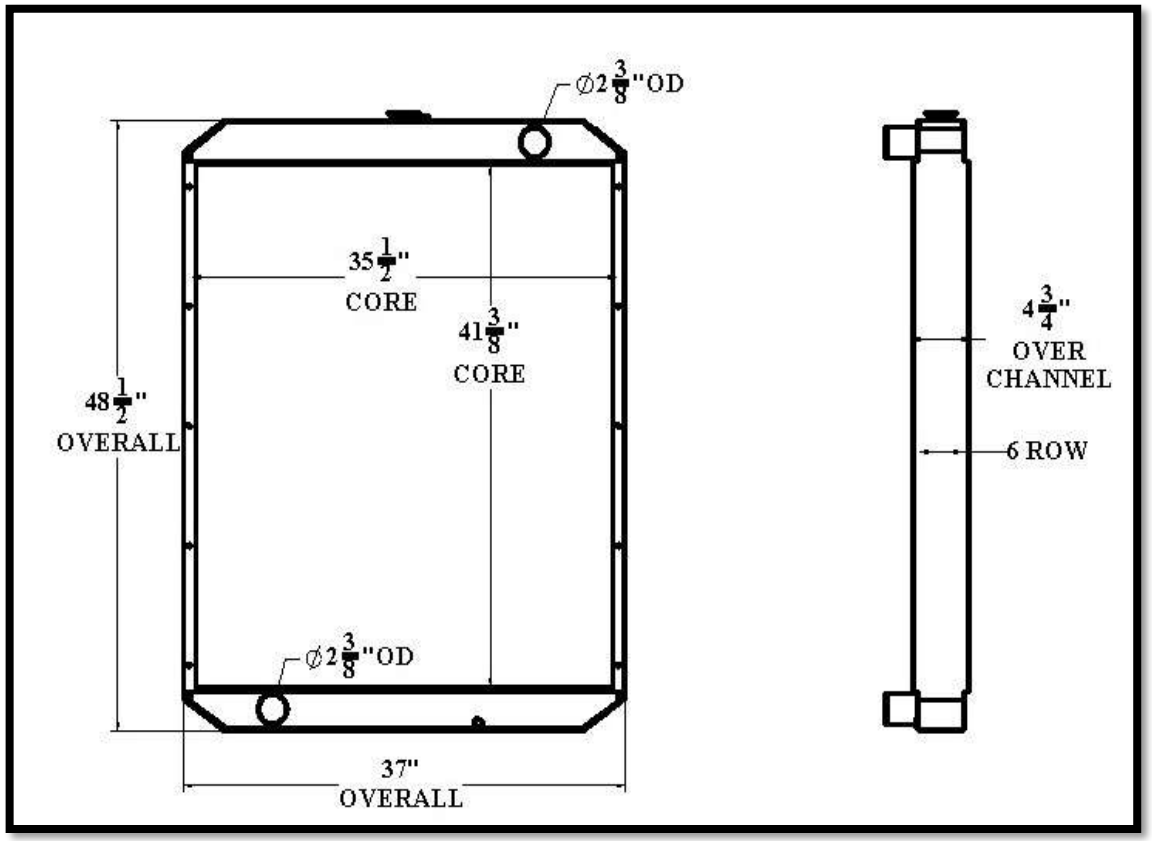

Overall Dimensions:48-1/2” X 37” X 4-3/4”
Core:41-3/8” X 35-1/2” X 6 ROW
Inlet: 2-3/8”OD
Outlet:2-3/8”OD

ST507

Listed dimensions may vary slightly from OE

ST508

BGR Part Number: ST-0509-6M-EF

451778, 451778AT, 3368518, 3560153

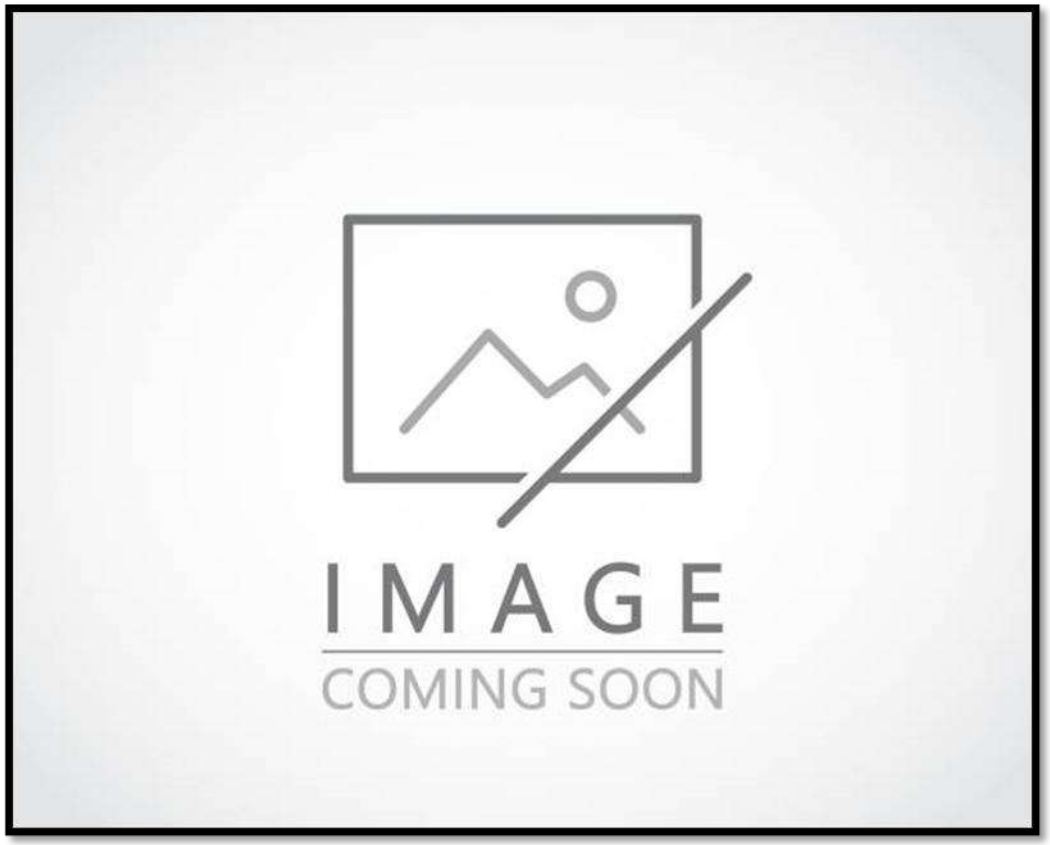

Overall Dimensions:

Core:

Inlet:

Outlet:

ST509

Tel 1.800.774.2168
www.bgrradiator.com

BGR Part Number: ST-0510-4M-NC

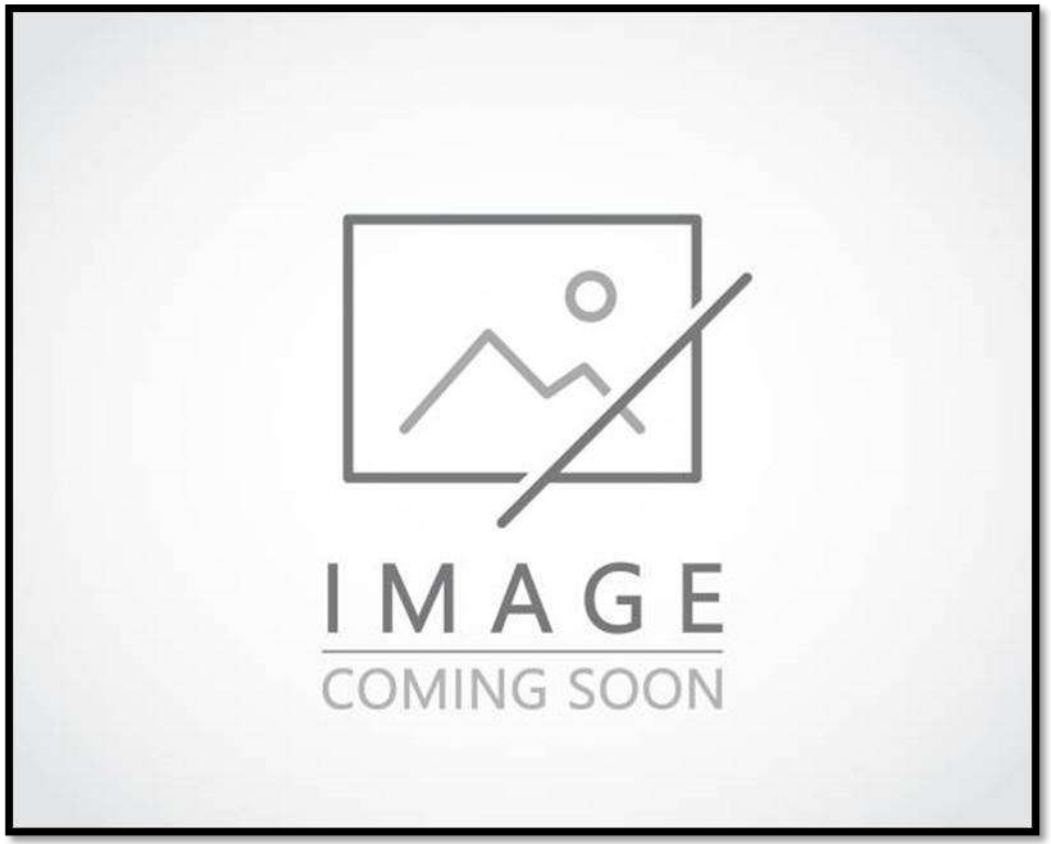

Overall Dimensions:

Core:

Inlet:

Outlet:

Listed dimensions may vary slightly from OE

ST510

BGR Part Number: ST-0511-3M-NC
KATOLIGHT 35KW VERSION OF ST-0001

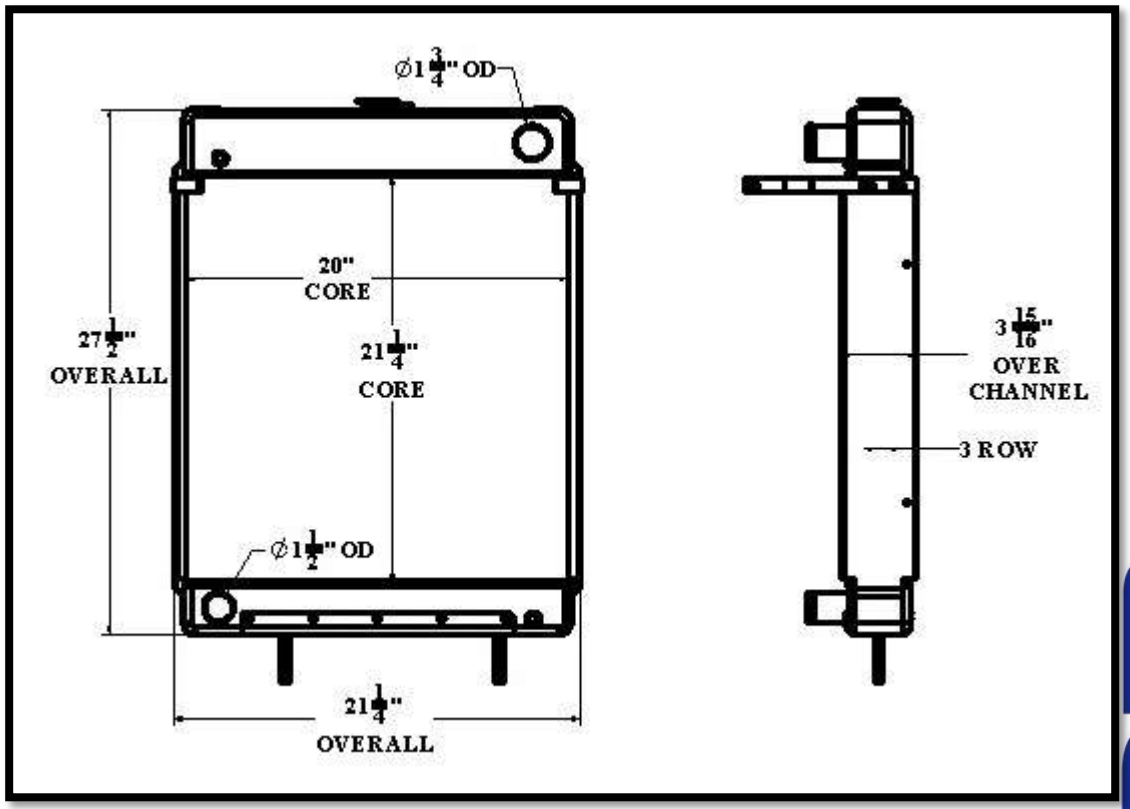

Overall Dimensions:27-1/2” X 21-1/4” X 3-15/16”
Core:21-1/4” X 20” X 3 ROW
Inlet: 1-3/4”OD
Outlet:1-1/2”OD

Tel 1.800.774.2168
www.bgrradiator.com
BGR RADIATOR

BGR Part Number: ST-0512-5M-F

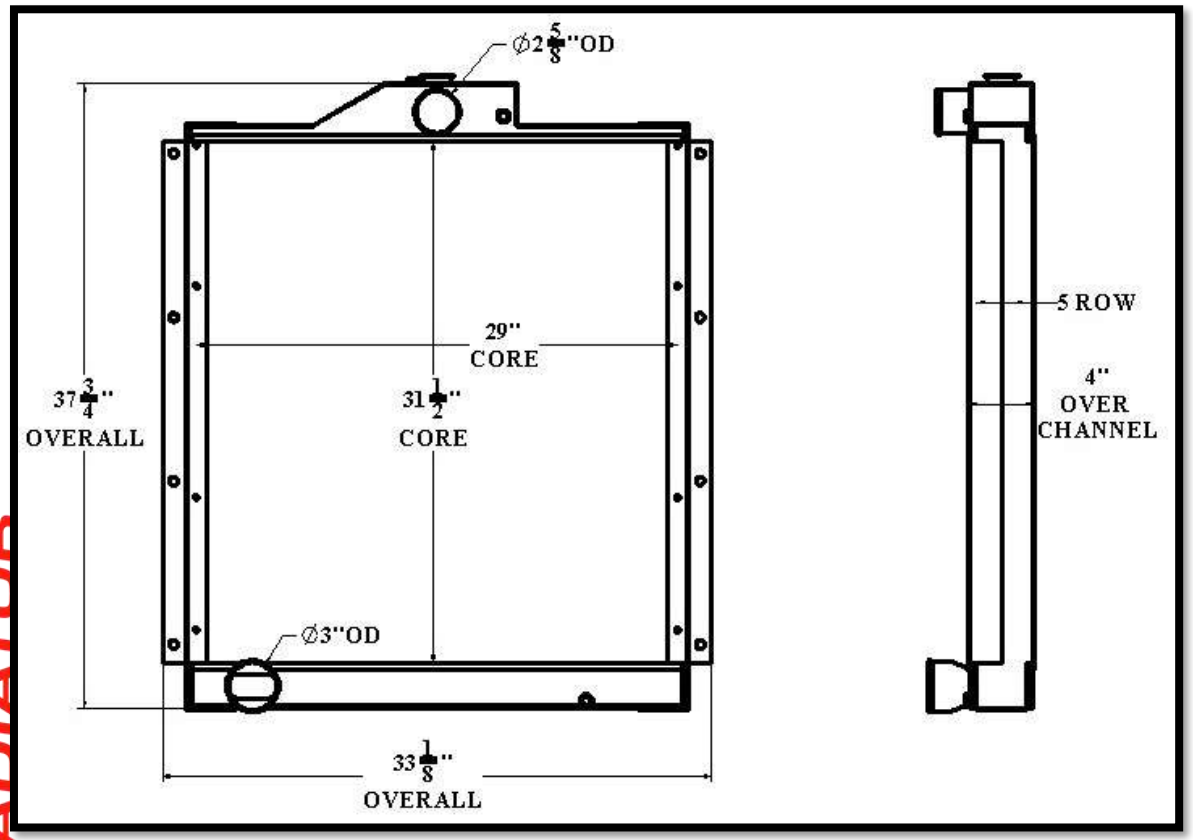

Overall Dimensions:37-3/4” X 33-1/8” x 4”
Core:31-1/2” X 29” X 5 ROW
Inlet:2-5/8”OD
Outlet:3”OD

Listed dimensions may vary slightly from OE

BGR Part Number: ST-0513-4M-F

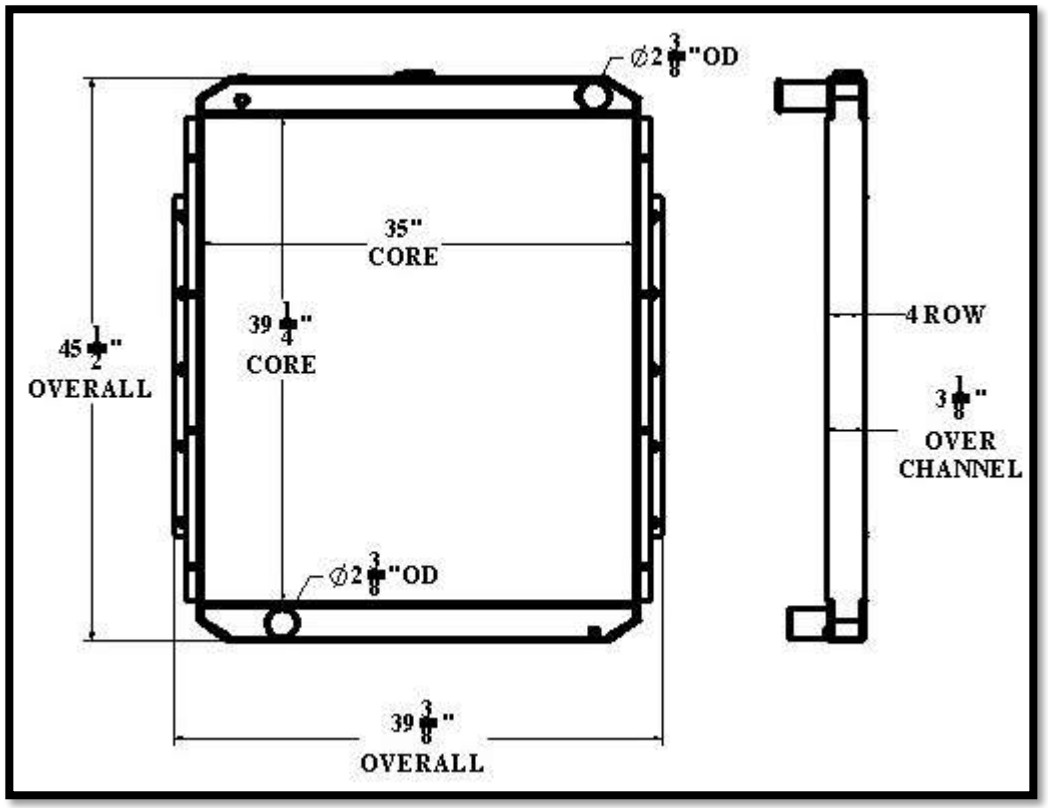

Overall Dimensions:45-1/2” X 39-3/8” X 3-1/8”
Core:39-1/4” X 35” X 4 ROW
Inlet: 2-3/8”OD
Outlet:2-3/8”OD

Tel 1.800.774.2168
www.bgrradiator.com
BGR RADIATOR

BGR Part Number: ST-0514-4M-NC
JMC 13-R-015, 01-00579 REV. C

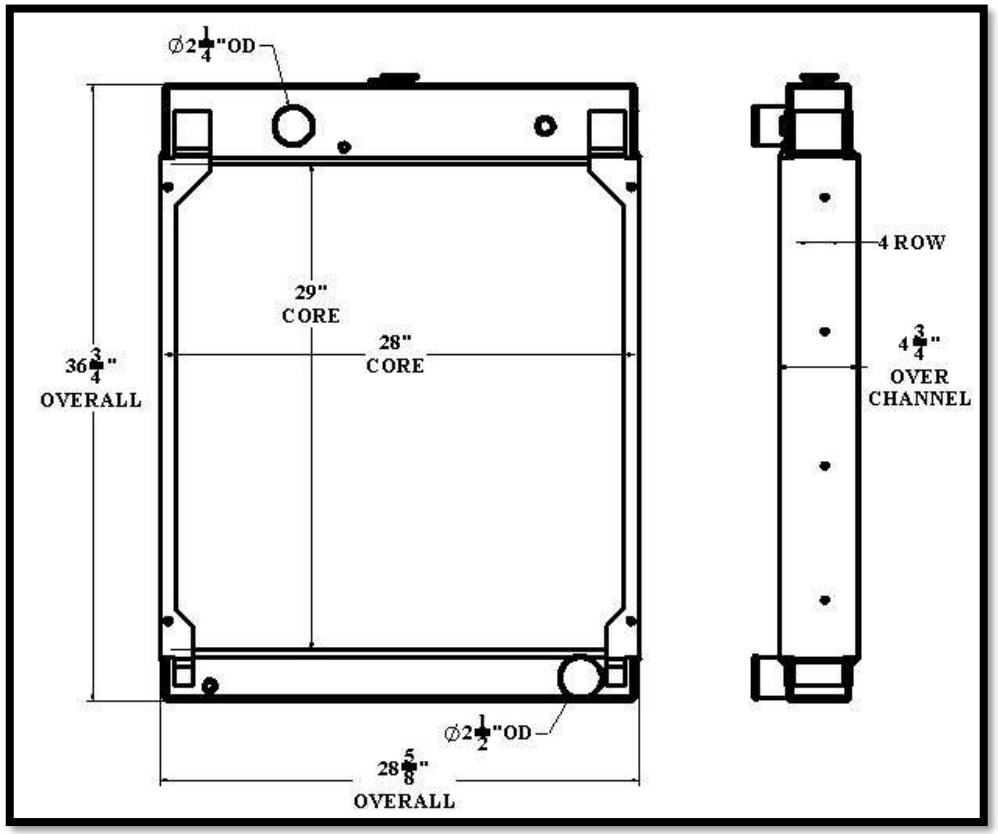

Overall Dimensions: 36-3/4” X 28-5/8” X 4-3/4”
Core: 29” X 28” X 4 ROW
Inlet: 2-1/4”OD
Outlet: 2-1/2”OD

ST513

Listed dimensions may vary slightly from OE

ST514

BGR Part Number: ST-0515-4M-NC
R123613B, APK8-000025, C381-013-0001

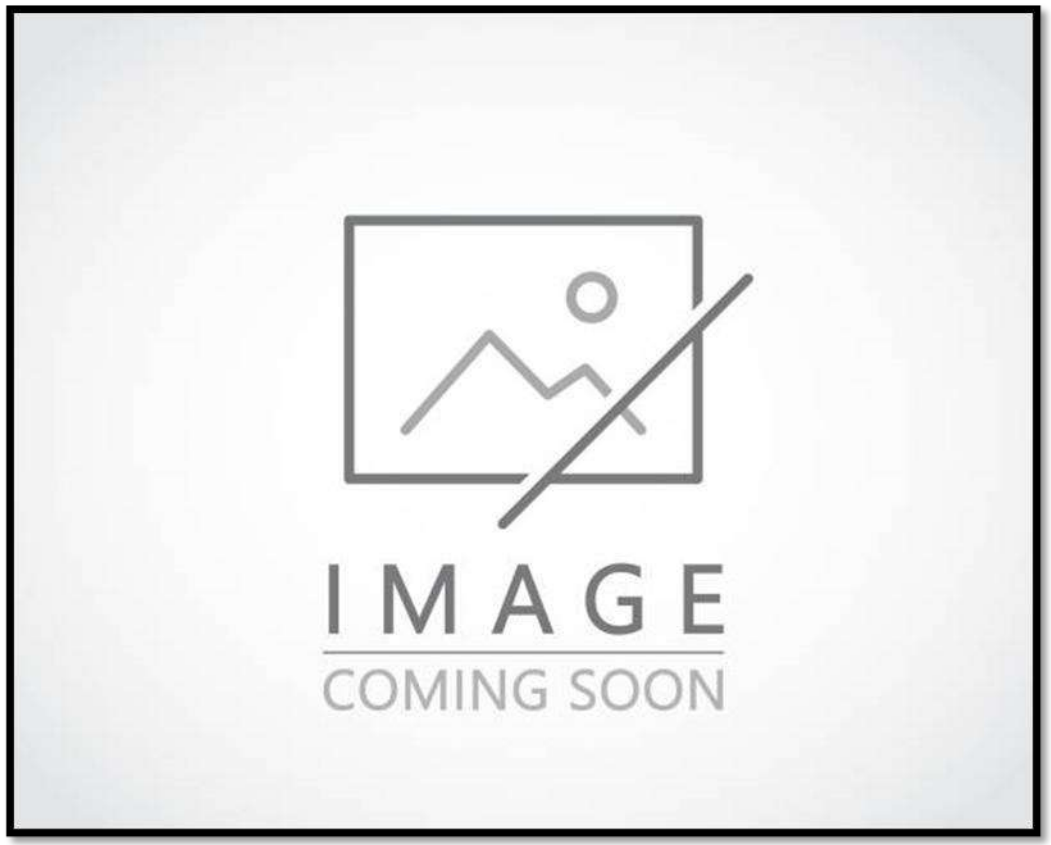

Overall Dimensions:
Core:
Inlet:
Outlet:

Tel 1.800.774.2168
www.bgrradiator.com

BGR Part Number: ST-0516-5M-F
HARRISON 3153196

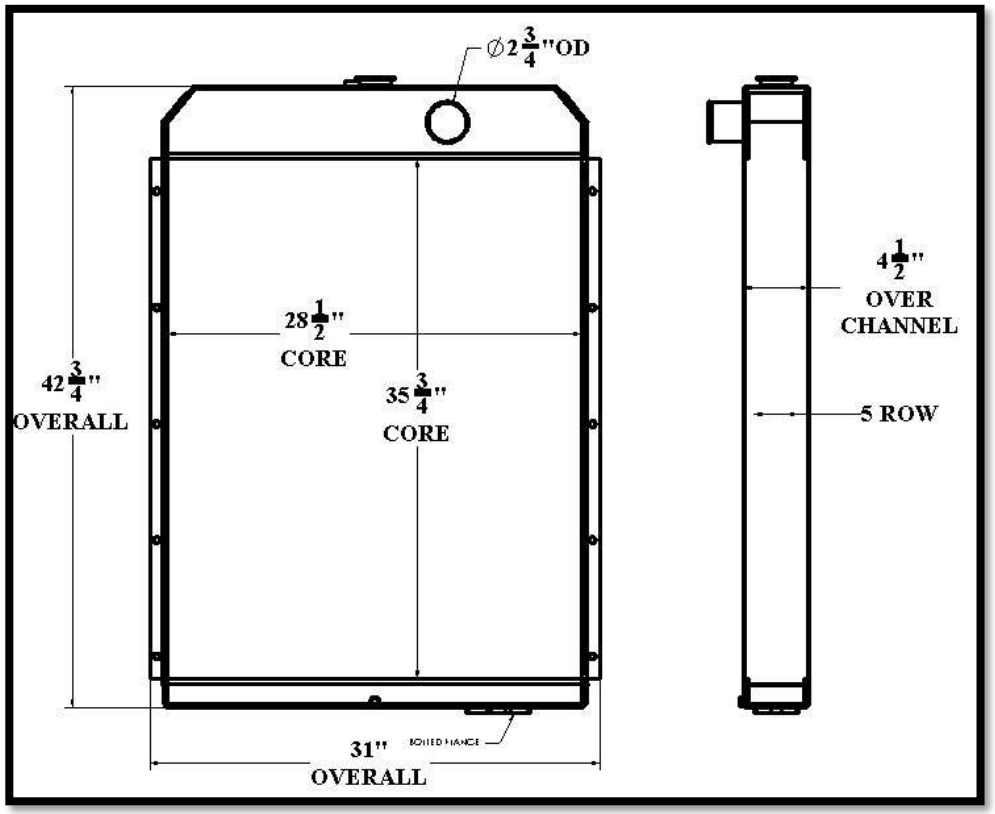

Overall Dimensions:42-3/4” X 31” X 4-1/2”
Core:35-3/4” X 28-1/2” X 5 ROW
Inlet:2-3/4”OD
Outlet: BOLTED FLANGE

Listed dimensions may vary slightly from OE

BGR Part Number: ST-0517-4M-NC

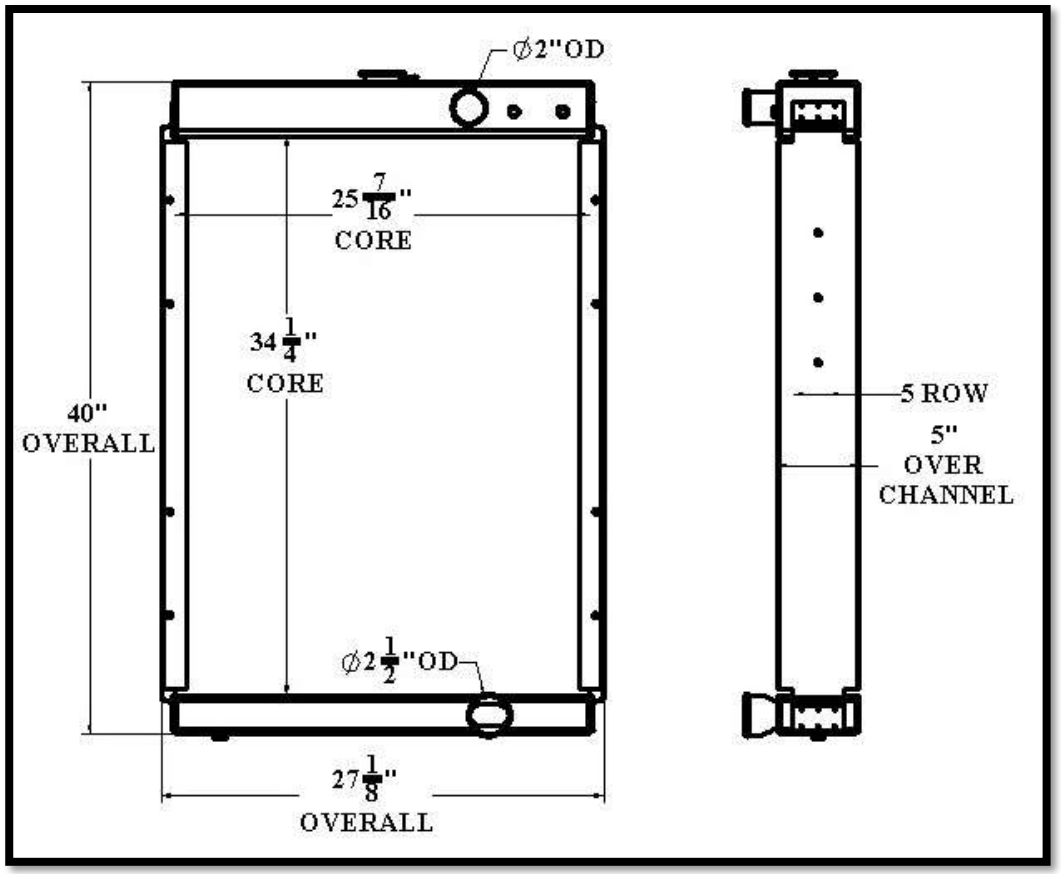

Overall Dimensions:40” X 27-1/8” X 5”
Core:34-1/4” X 25-7/16 X 5 ROW
Inlet:2”OD
Outlet:2-1/2”OD

Tel 1.800.774.2168
www.bgrradiator.com

BGR Part Number: ST-0518-3M-B
SUA73454 ENGINE S4L MITSUBISHI

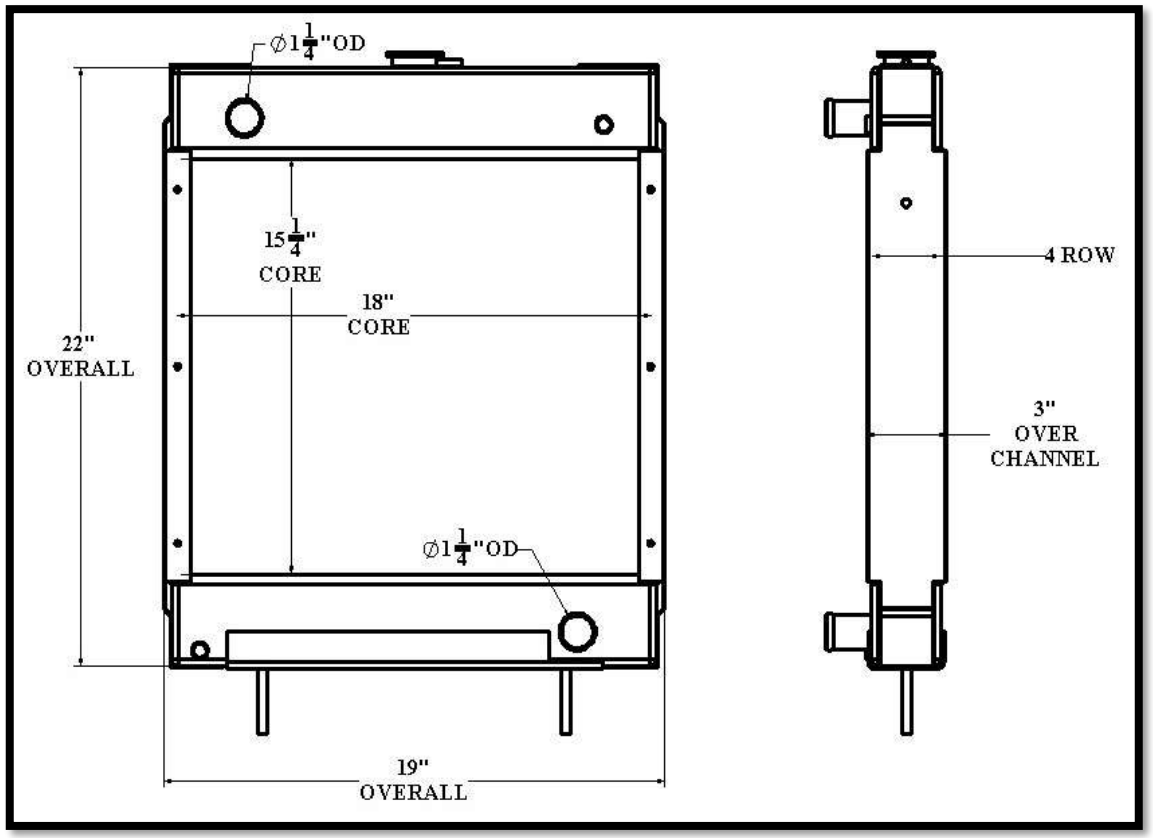

Overall Dimensions: 22” X 19” X 3”
Core: 15-1/4” X 18” X 3 ROW
Inlet: 1-1/4”
Outlet: 1-1/4”

Listed dimensions may vary slightly from OE

BGR Part Number: ST-0519-6M-F
0D6059

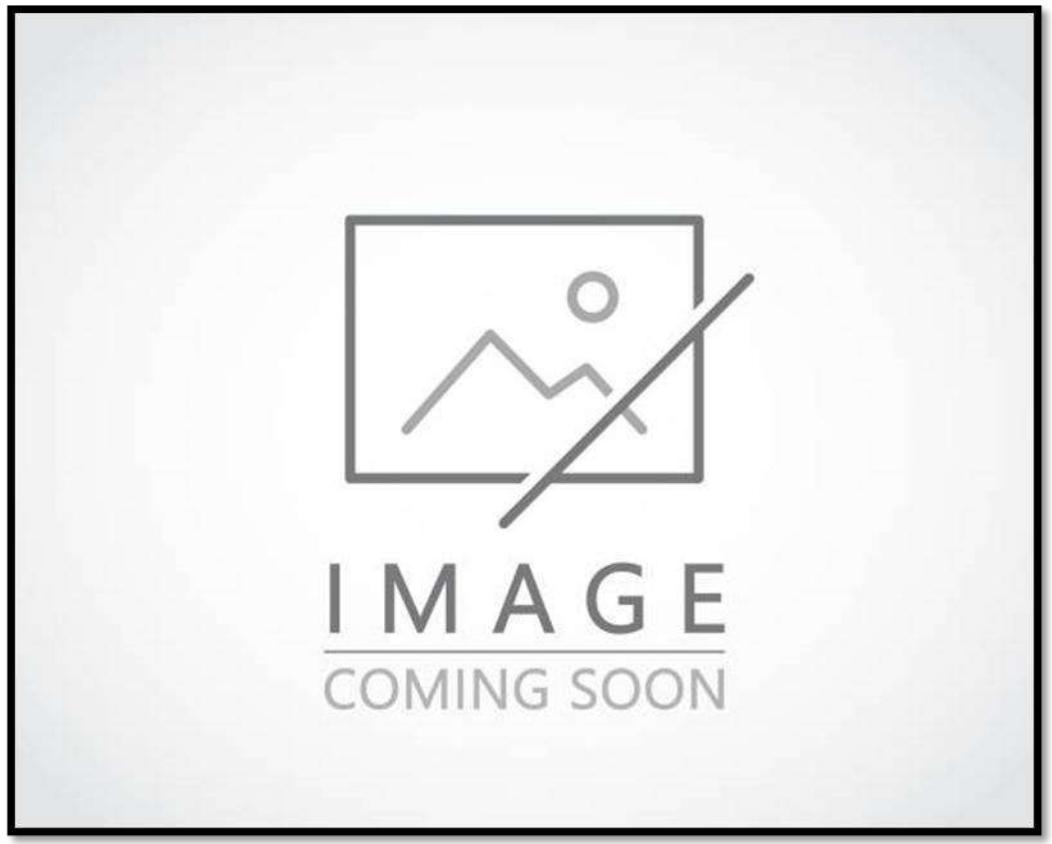

Overall Dimensions:
Core:
Inlet:
Outlet:

Tel 1.800.774.2168
www.bgrradiator.com

BGR Part Number: ST-0520-3M-B
381004290 232000-6430

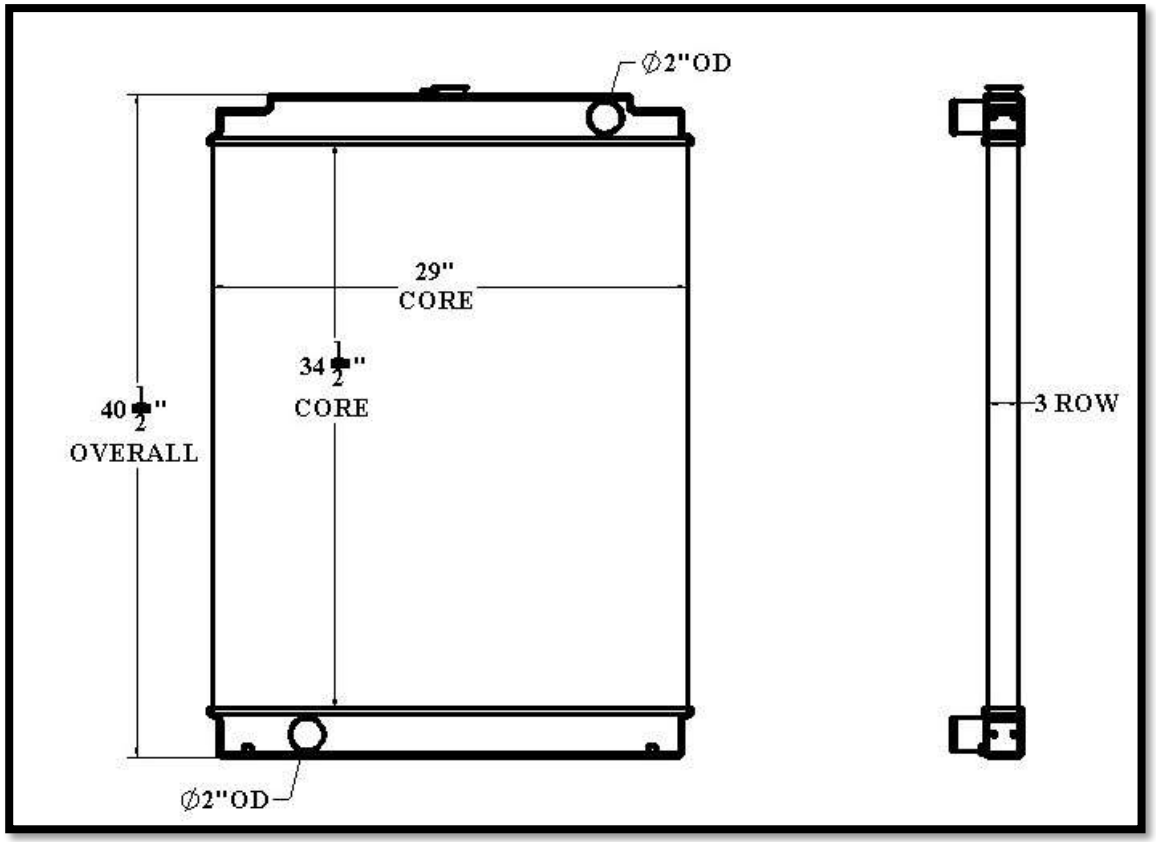

Overall Dimensions:40-1/2”
Core:34-1/2” X 29” X 3 ROW
Inlet:2”OD
Outlet: 2”OD

ST519

Listed dimensions may vary slightly from OE

ST520

BGR Part Number: ST-0521-4M-F
40 KW TRITON

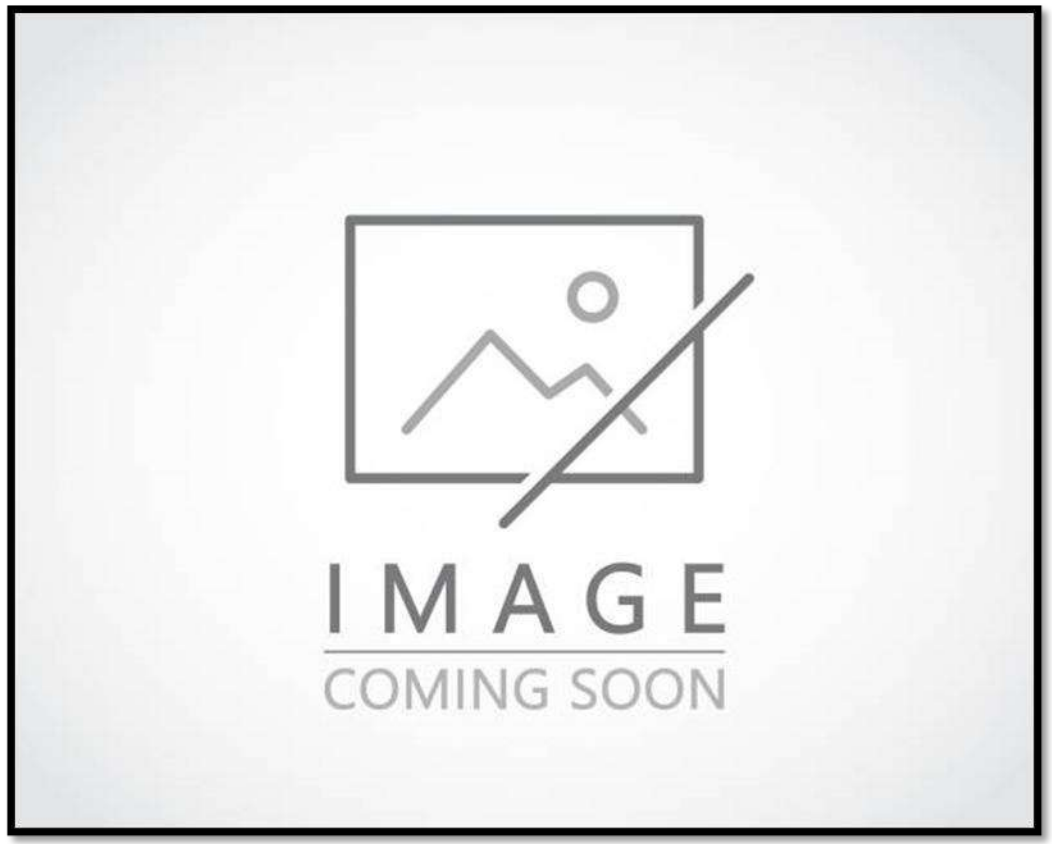

Overall Dimensions:
Core:
Inlet:
Outlet:

Tel 1.800.774.2168
www.bgrradiator.com

BGR Part Number: ST-0522-3M-F
3138196

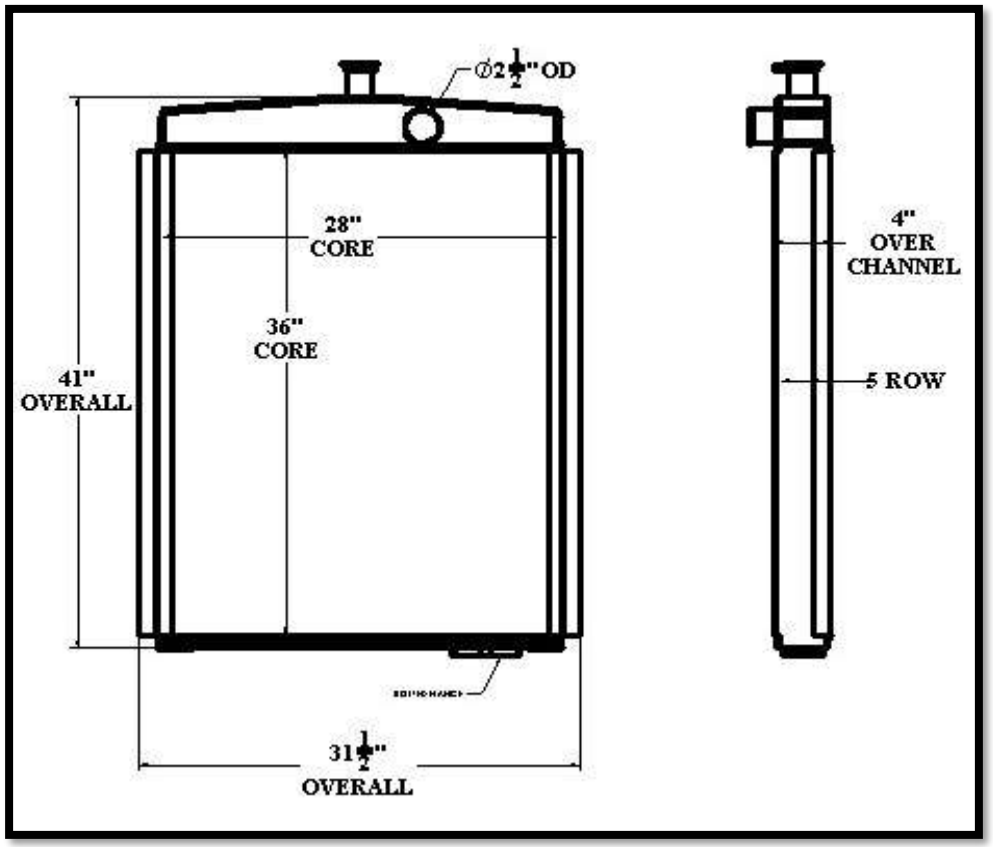

Overall Dimensions:41” X 31-1/2” X 4”
Core:36” X 28” X 5 ROW
Inlet:2-1/2”OD
Outlet: BOLTED FLANGE

ST521

Listed dimensions may vary slightly from OE

ST522

BGR Part Number: ST-0523-6M-F
0D6389

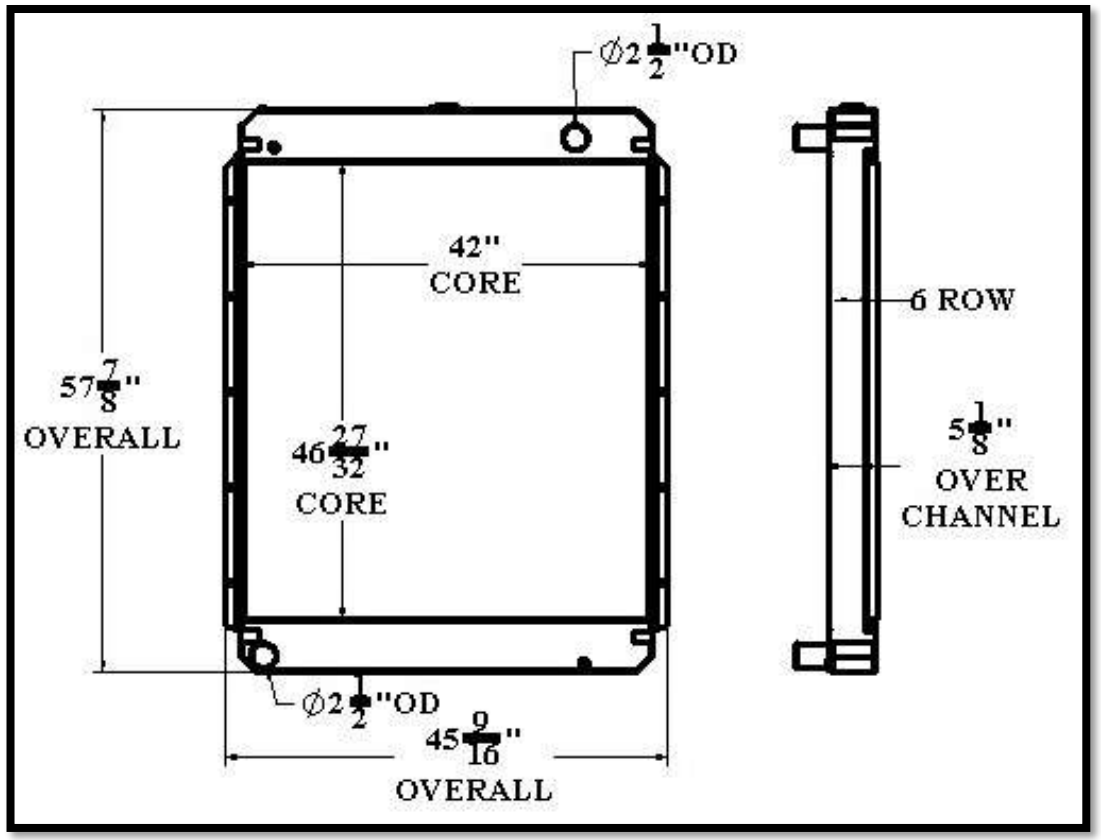

Overall Dimensions:57-7/8” X 45-9/16” X 5-1/8”
Core:46-27/32” X 42” X 6 ROW
Inlet:2-1/2”OD
Outlet:2-1/2”OD

Tel 1.800.774.2168
www.bgrradiator.com
BGR RADIATOR

BGR Part Number: ST-0524-2VTR-F
0F2608D

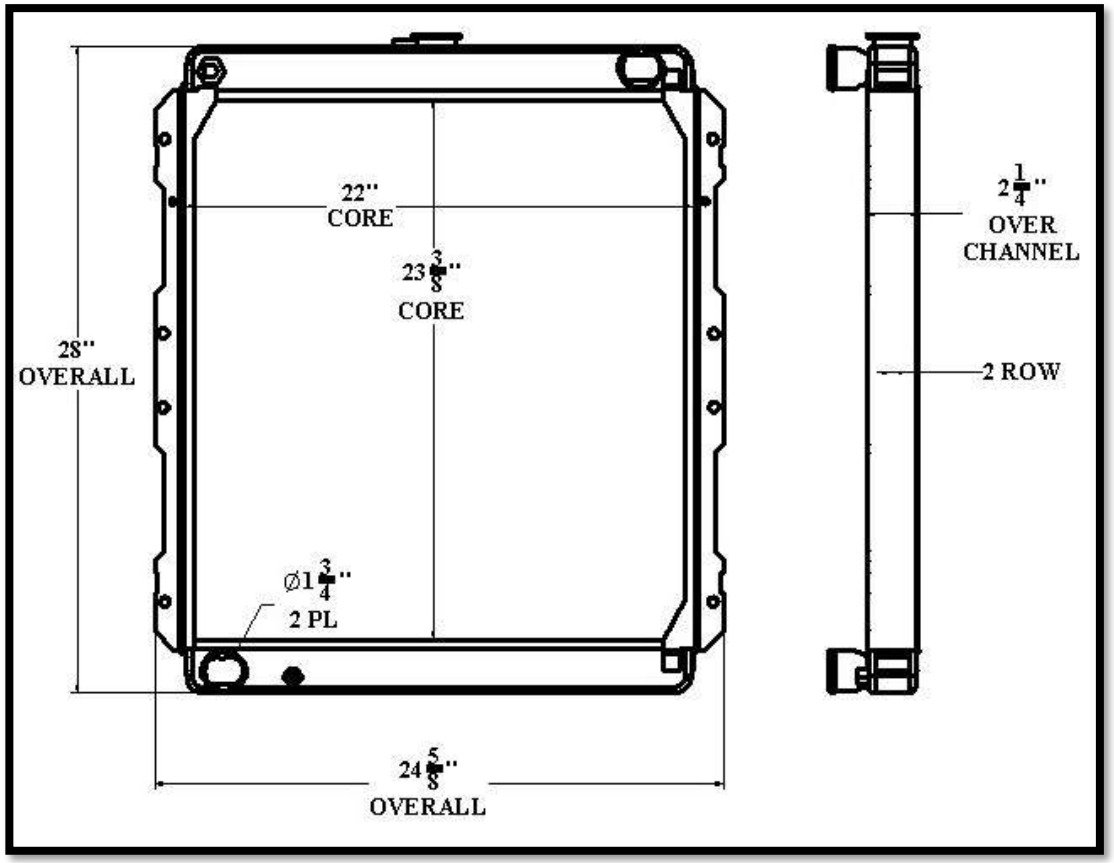

Overall Dimensions:28” X 24-5/8” X 2-1/4”
Core:23-3/8” X 22” X 2 ROW
Inlet:1-3/4”OD
Outlet:1-3/4”OD

ST523

Listed dimensions may vary slightly from OE

ST524

BGR Part Number: ST-0525-3M-F
451482 0602011999

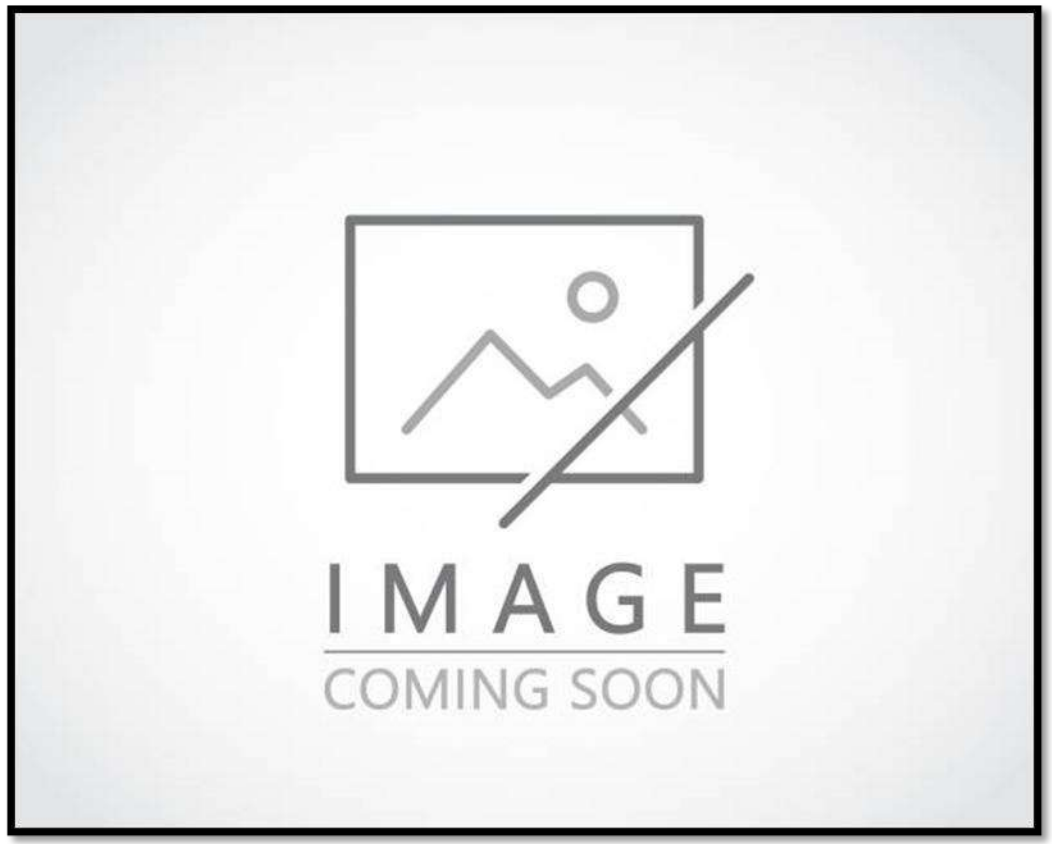

Overall Dimensions:
Core:
Inlet:
Outlet:

Tel 1.800.774.2168
www.bgrradiator.com

BGR Part Number: ST-0526-5M-NC
12255 E 02

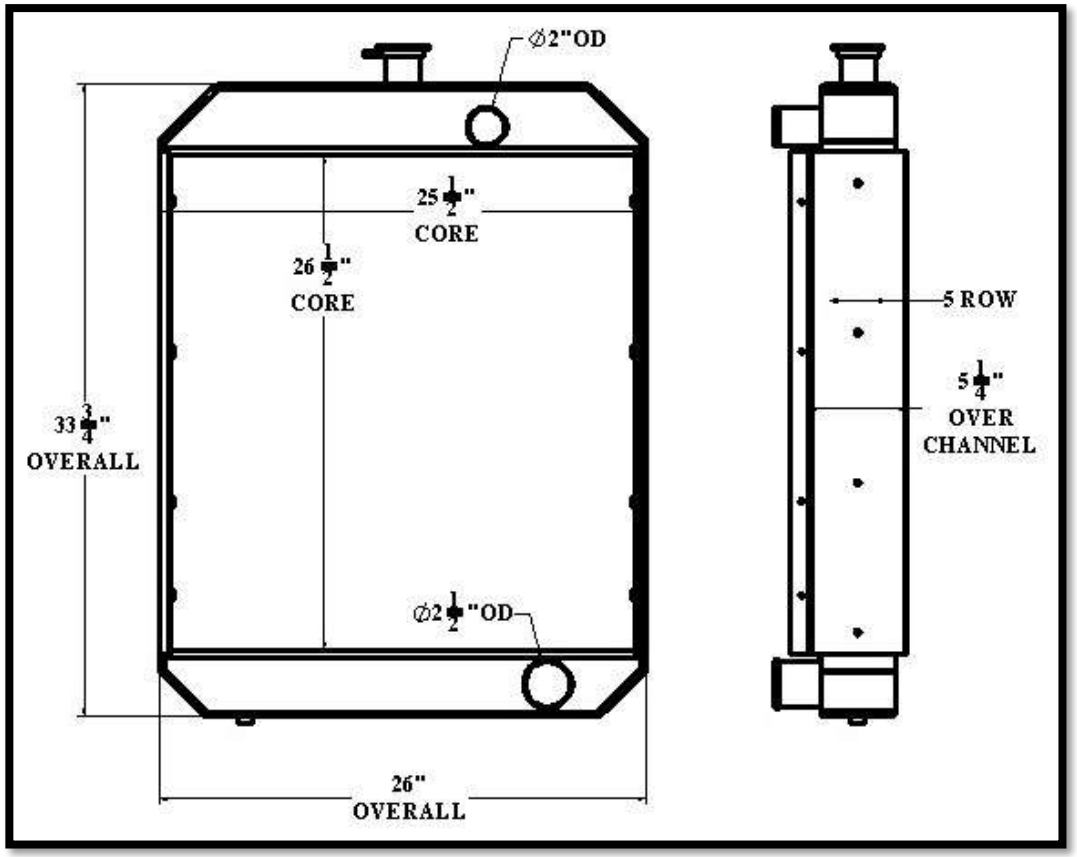

Overall Dimensions:33-3/4” X 26” X 5-1/4”
Core:26-1/2” X 25-1/2” X 5 ROW
Inlet:2”OD
Outlet:2-1/2”OD

ST525

Listed dimensions may vary slightly from OE

ST526

BGR Part Number: ST-0527-5M-NC
12255E02

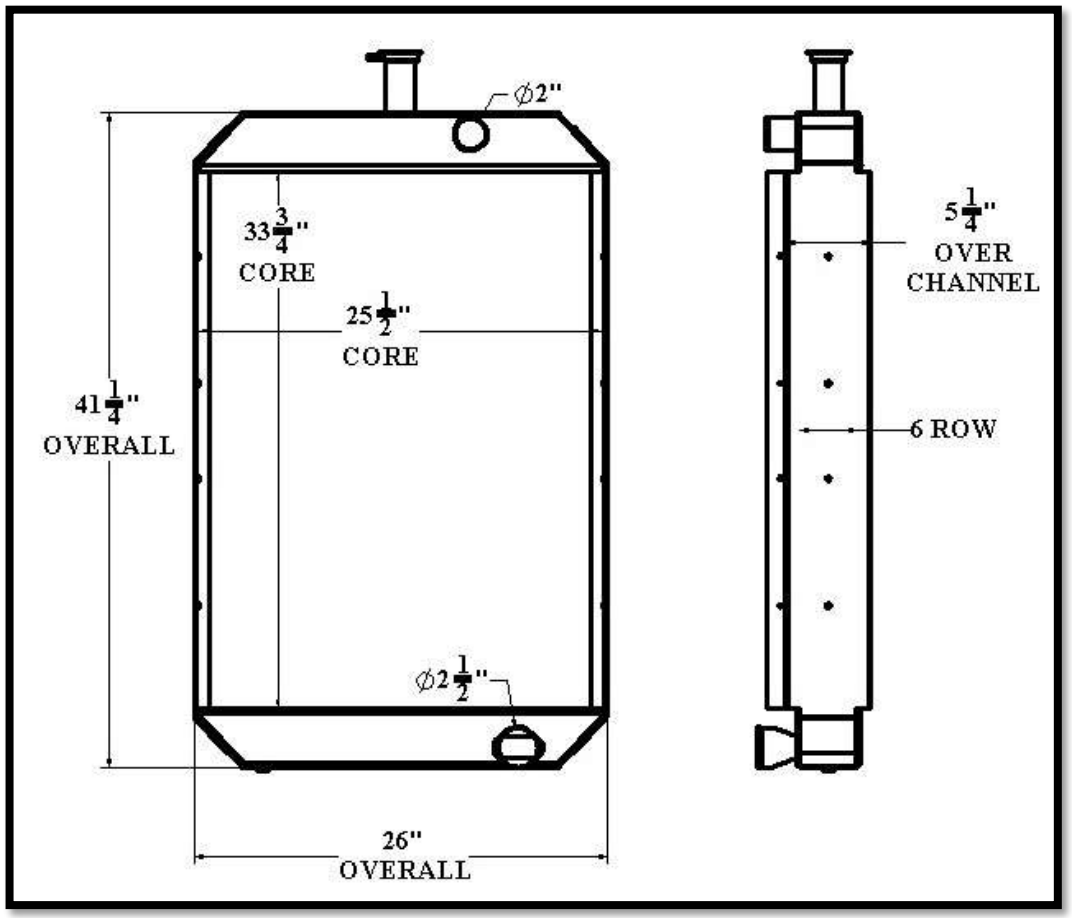

Overall Dimensions:41-1/4” X 26” X 5-1/4
Core: 33-3/4” X 25-1/2” X 6 ROW
Inlet: 2”OD
Outlet: 2-1/2”OD

Tel 1.800.774.2168
www.bgrradiator.com

BGR Part Number: ST-0528-6M-EF
RS-6490 REV E

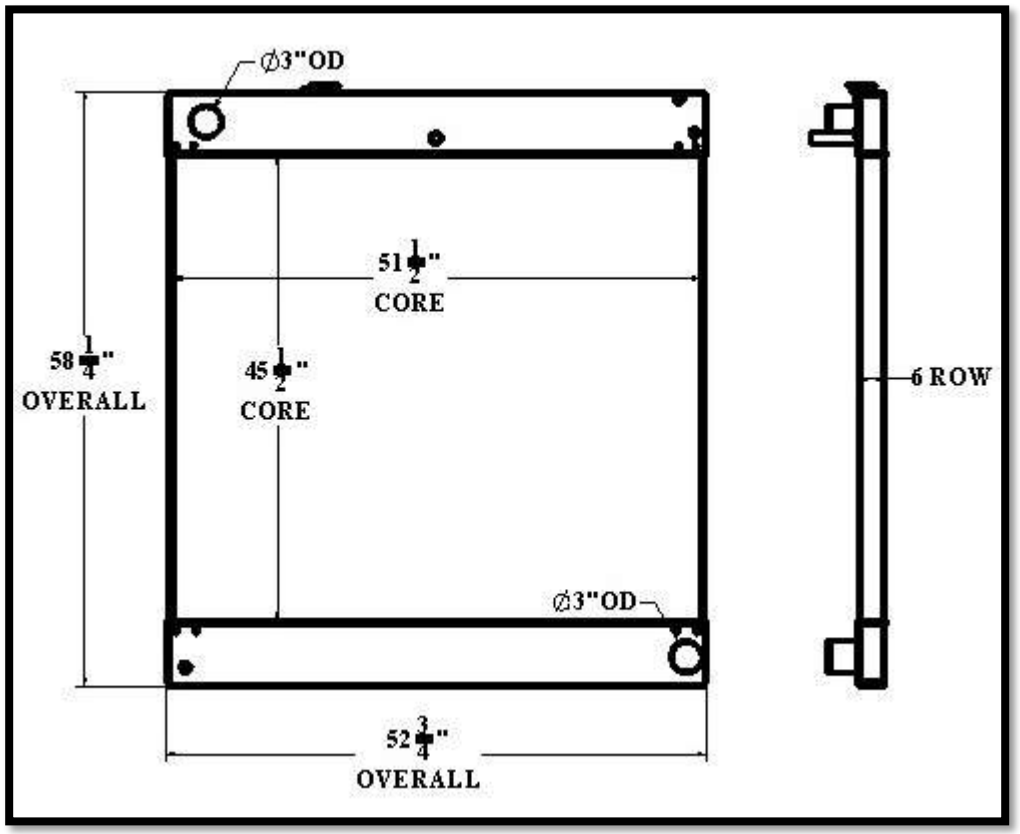

Overall Dimensions:58-1/4” X 52-3/4”
Core:45-1/2” X 51-1/2” X 6 ROW
Inlet:3”OD
Outlet:3”OD

ST527

Listed dimensions may vary slightly from OE

ST528

BGR Part Number: ST-0529-5M-F
YOUNG 289726, 89292091, 2678249

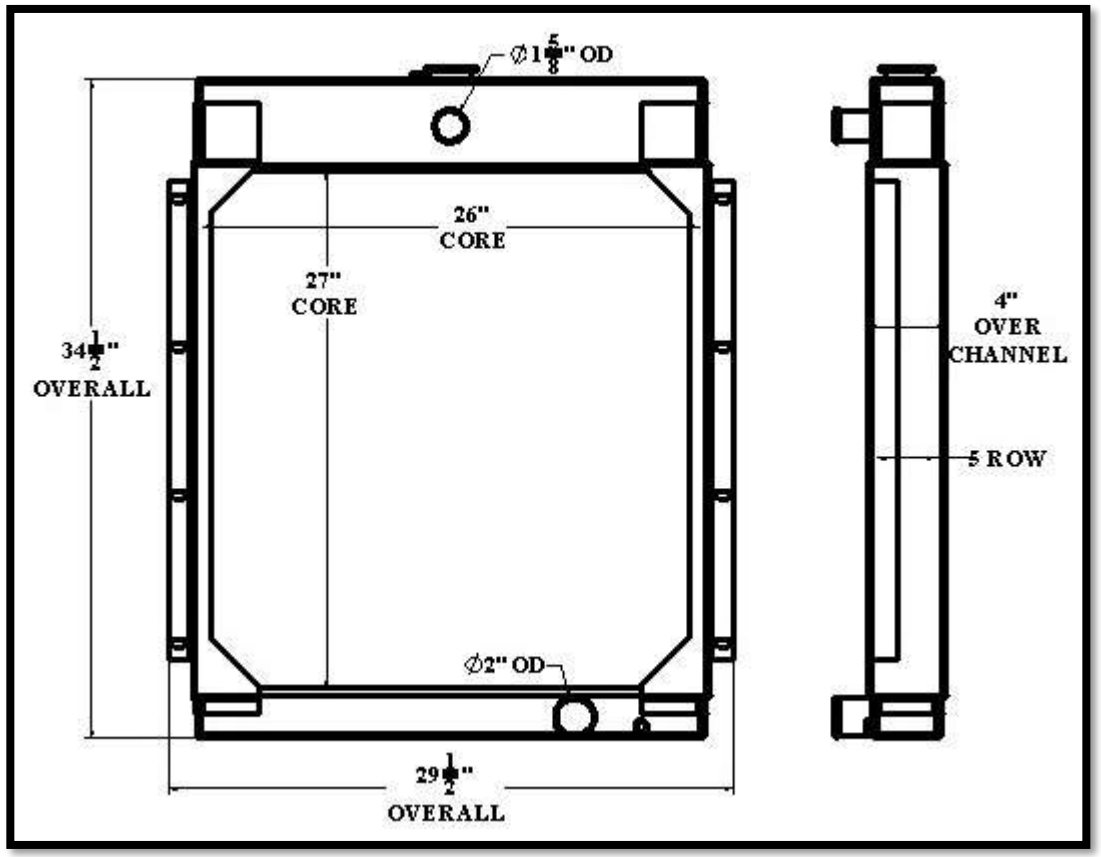

Overall Dimensions:34-1/2” X 29-1/2” X 4”
Core:27” X 26” X 5 ROW
Inlet:1-5/8”OD
Outlet:2”OD

Tel 1.800.774.2168
www.bgrradiator.com

BGR Part Number: ST-0530-3T-NC
A-225067

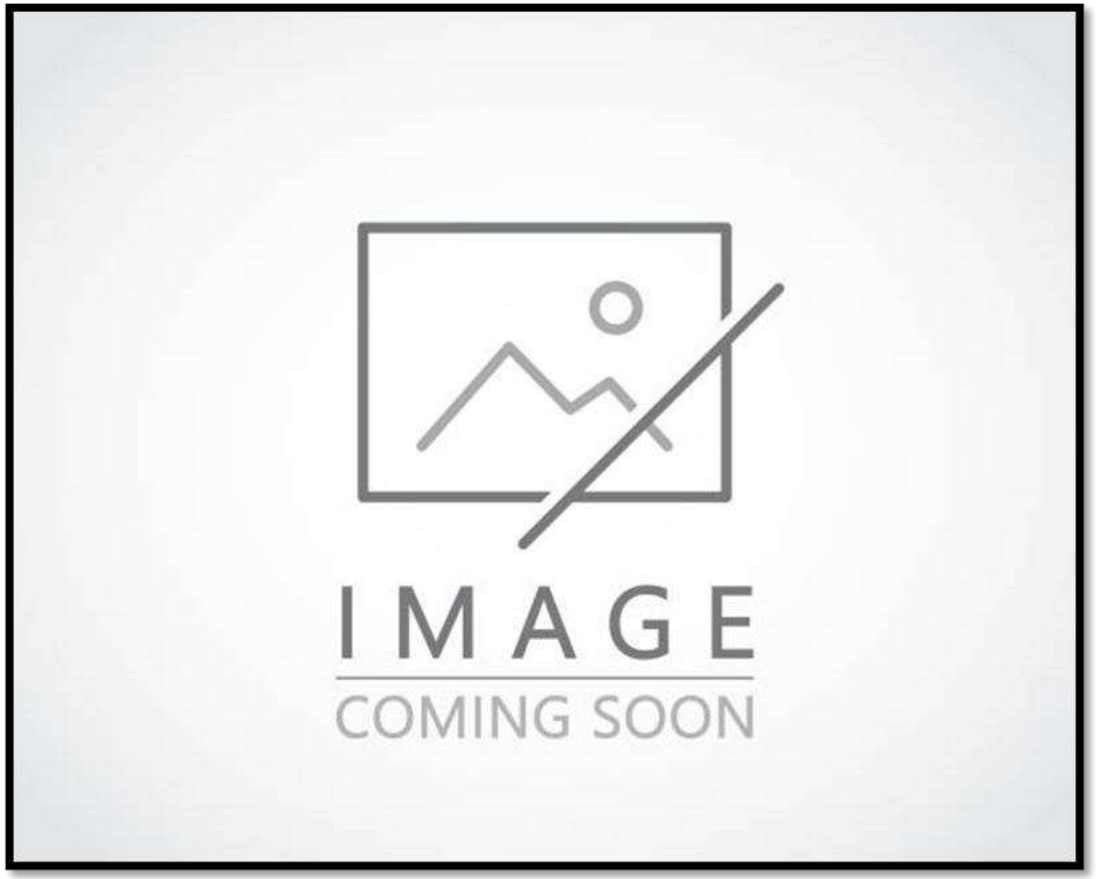

Overall Dimensions:
Core:
Inlet:
Outlet:

Listed dimensions may vary slightly from OE

BGR Part Number: ST-0531-5M-EF
116513

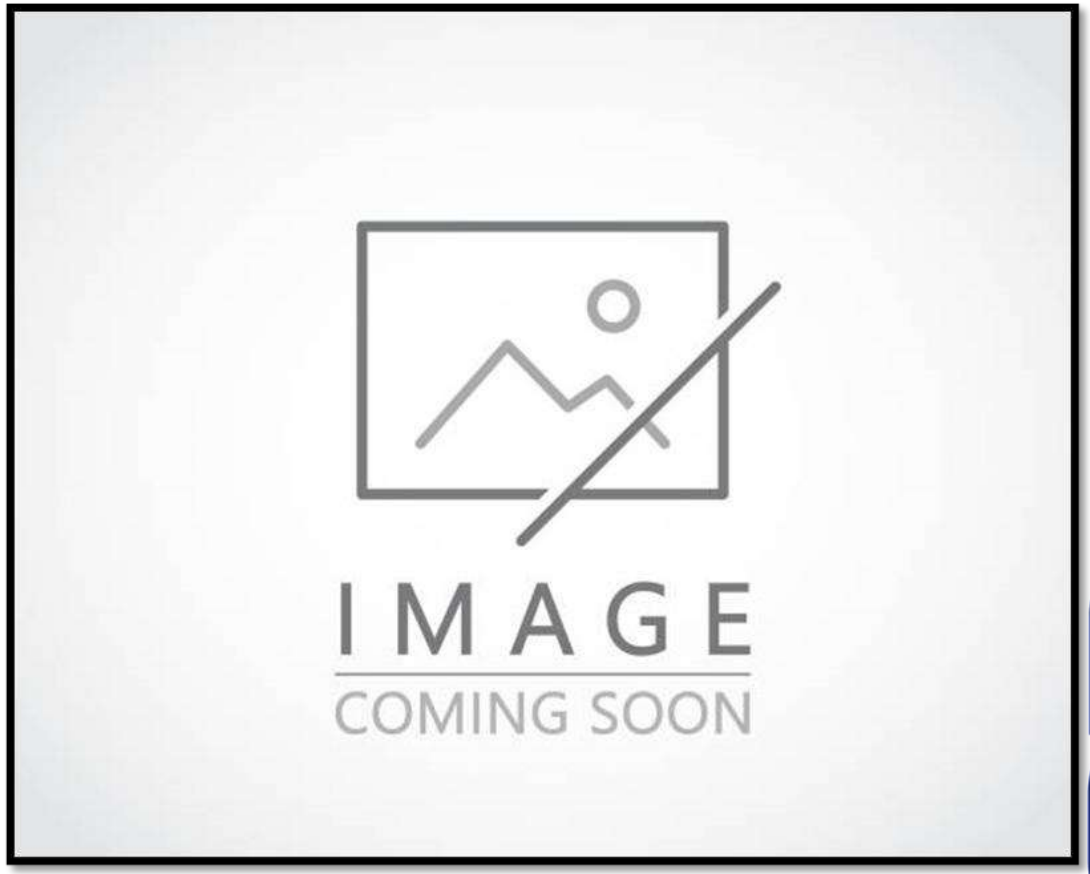

Overall Dimensions:
Core:
Inlet:
Outlet:

ST531

Tel 1.800.774.2168
www.bgrradiator.com

BGR Part Number: ST-0532-3M-F

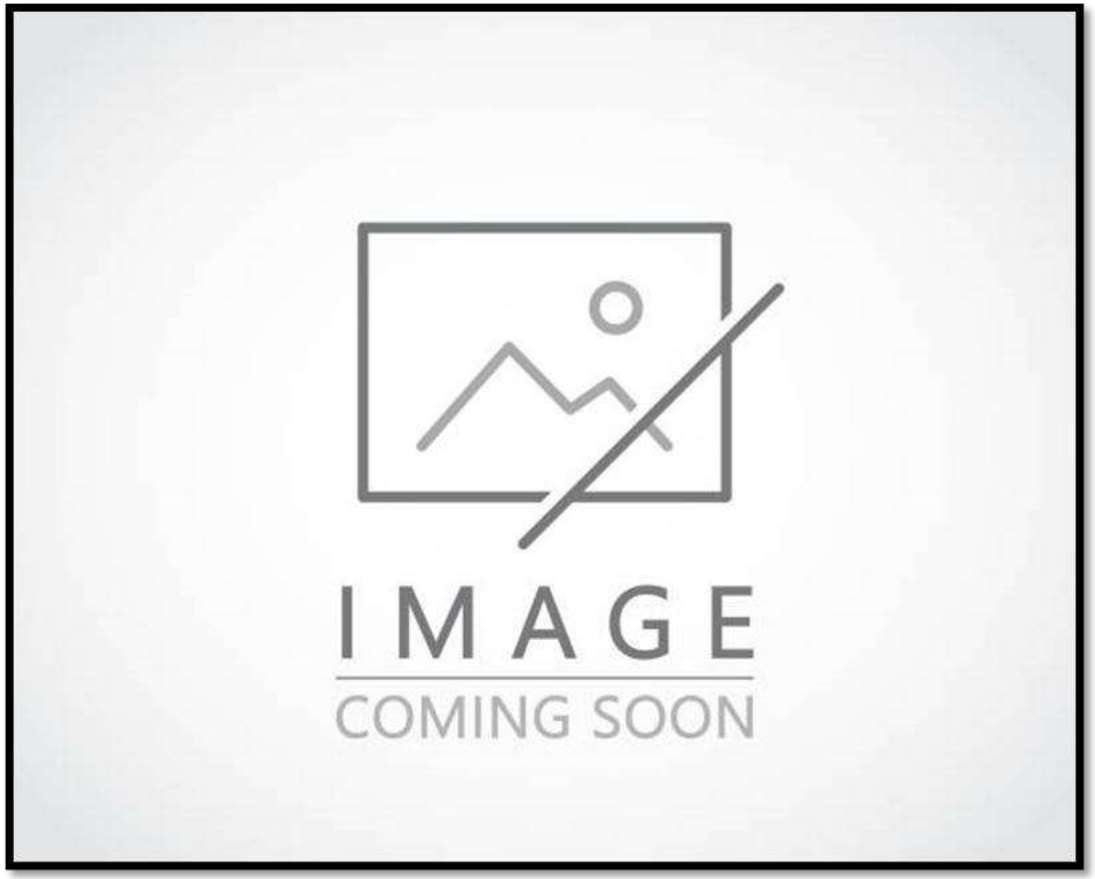

Overall Dimensions:
Core:
Inlet:
Outlet:

ST532

Listed dimensions may vary slightly from OE

BGR Part Number: ST-0533-5M-NC
1N-4343

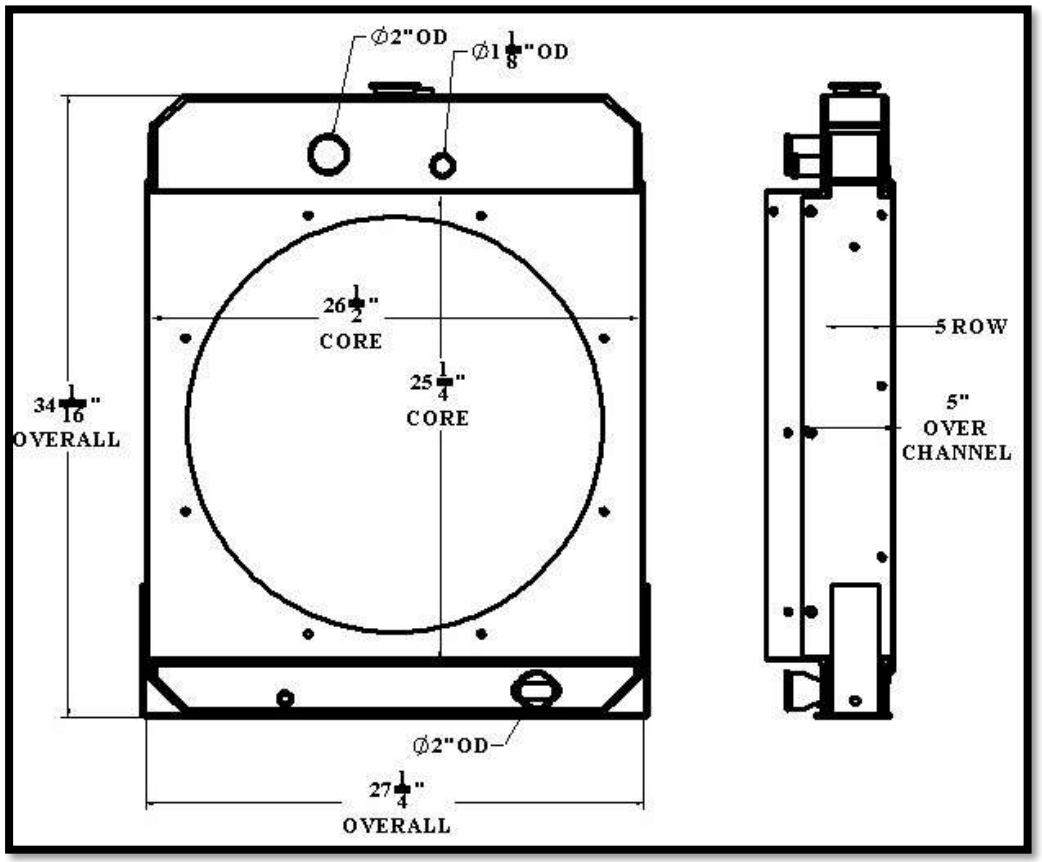

Overall Dimensions:34-1/16” X 27-1/4” X 5”
Core:25-1/4” X 26-1/2” X 5 ROW
Inlet:2”OD,1-1/8”OD
Outlet:2”OD

Tel 1.800.774.2168
www.bgrradiator.com

BGR Part Number: ST-0534-4M-EF
120-173, 55853.197/560

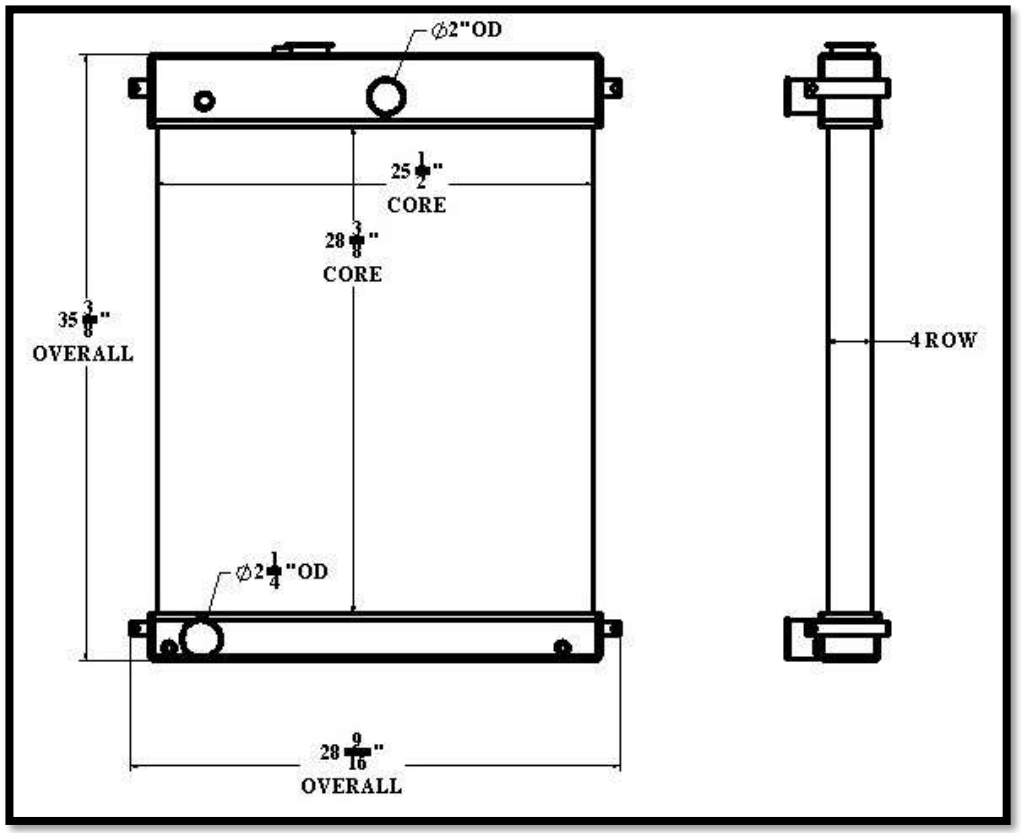

Overall Dimensions:35-3/8” X 28-9/16”
Core:28-3/8” X 25-1/2” X 4 ROW
Inlet:2”OD
Outlet:2-1/4”OD

ST533

Listed dimensions may vary slightly from OE

ST534

BGR Part Number: ST-0535-5M-EF
864891, 9739, 863061

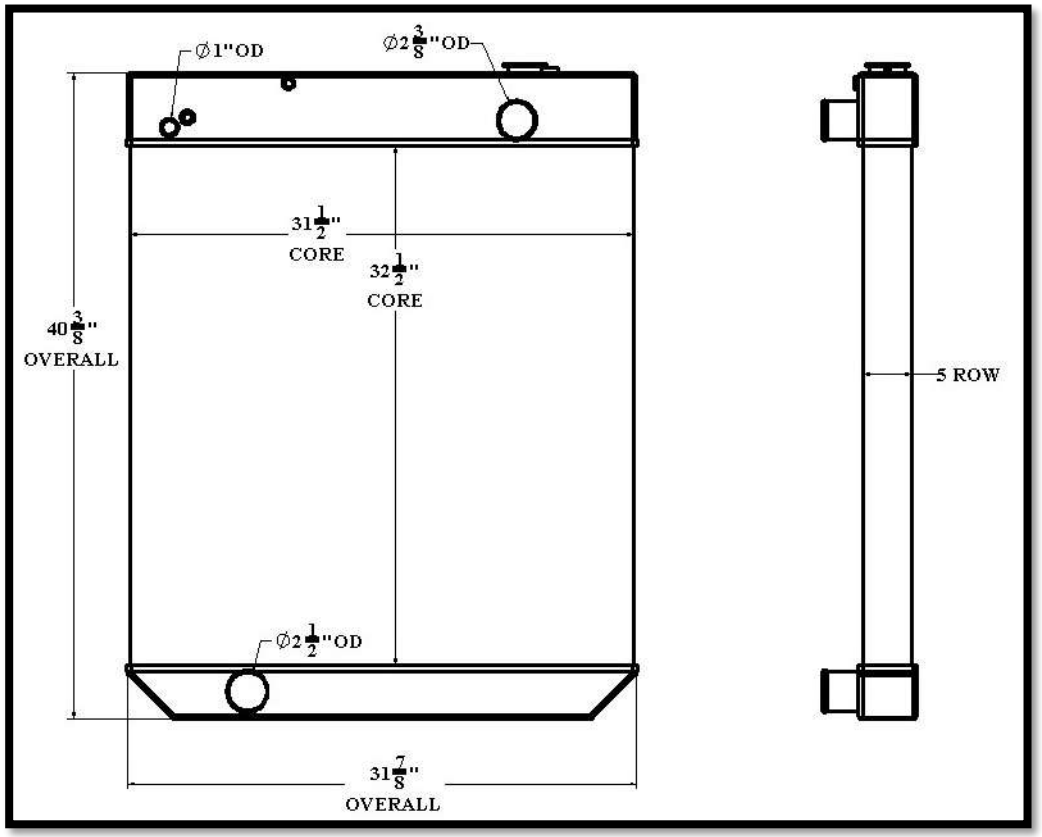

Overall Dimensions:40-3/8” X 31-7/8”
Core:32-1/2” X 31-1/2” X 5 ROW
Inlet:2-3/8”OD,1”OD
Outlet:2-1/2”OD

Tel 1.800.774.2168
www.bgrradiator.com

BGR Part Number: ST-0536-3M-F
Detroit Diesel 50357001

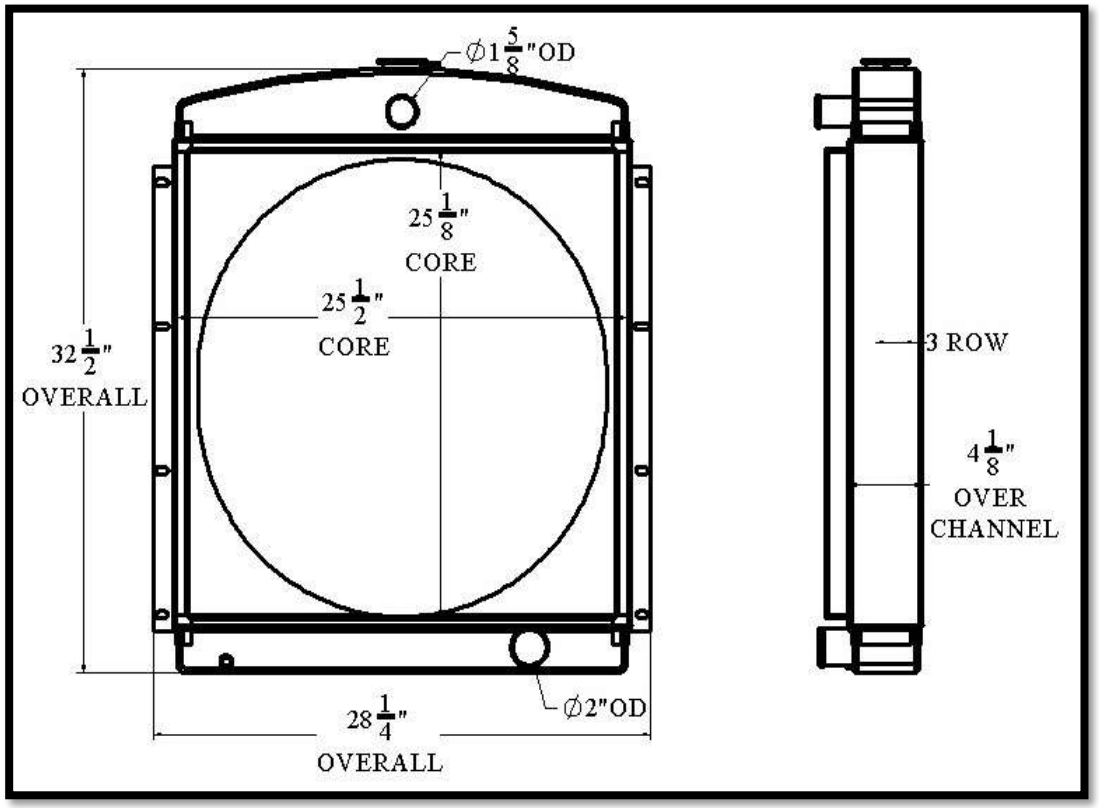

Overall Dimensions:32-1/2” X 28-1/4” X 4-1/8”
Core:25-1/8” X 25-1/2” X 3 ROW
Inlet:1-5/8”OD
Outlet:2”OD

ST535

Listed dimensions may vary slightly from OE

ST536

BGR Part Number: ST-0537-5M-NC
GM63538

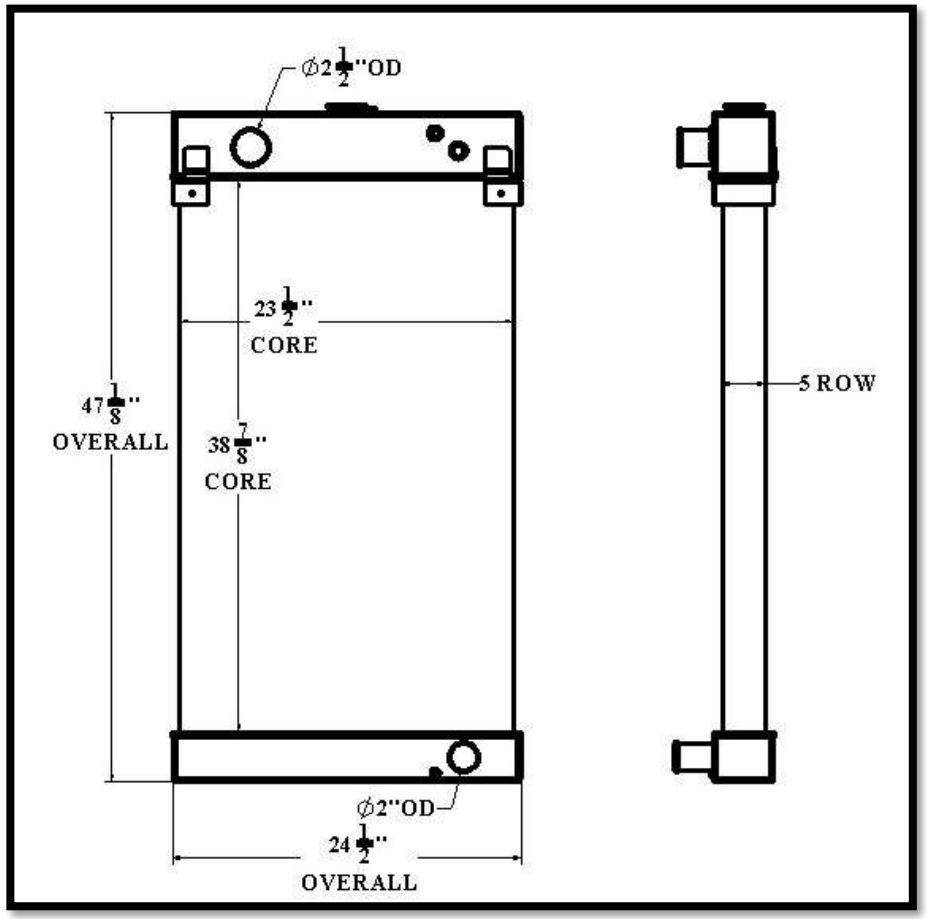

Overall Dimensions: 47-1/8” X 24-1/2”
Core: 38-7/8” X 23-1/2” X 5 ROW
Inlet: 2-1/2”OD
Outlet: 2”OD

Tel 1.800.774.2168
www.bgrradiator.com

BGR Part Number: ST-0538-4M-NC
100KW Elliot Magnetek

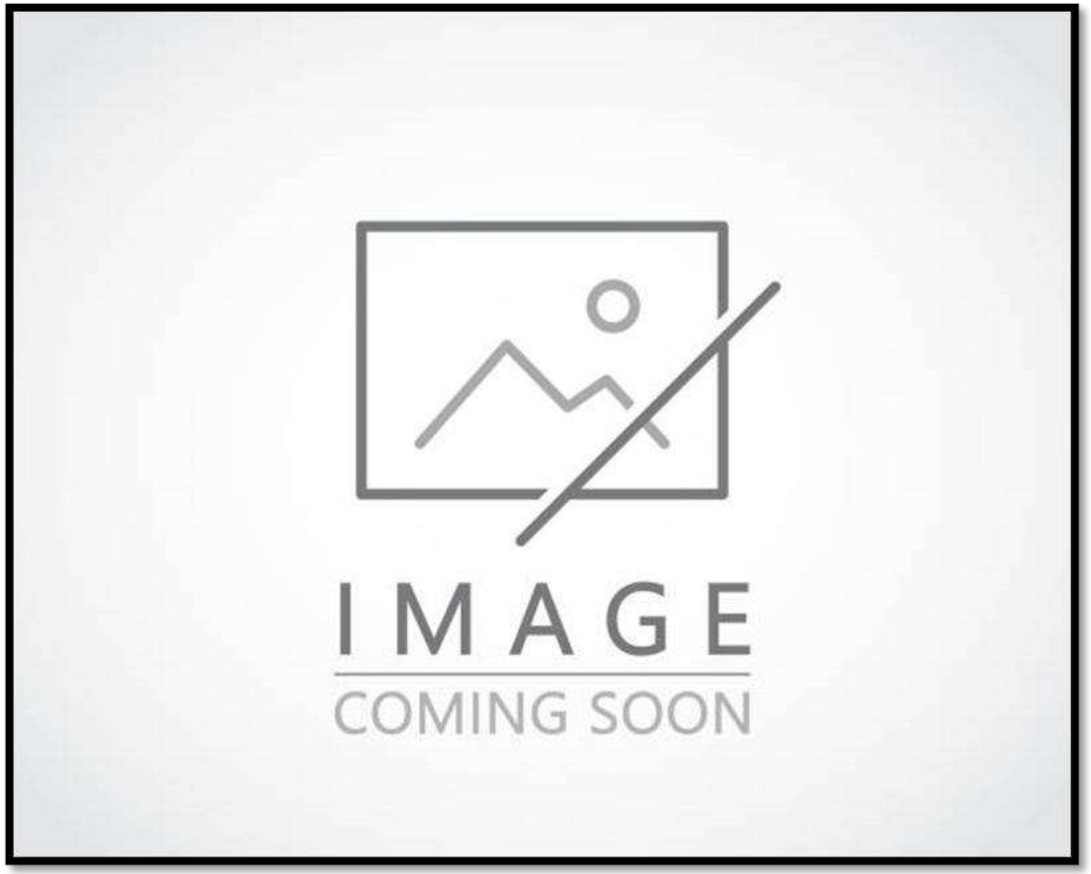

Overall Dimensions:
Core:
Inlet:
Outlet:

Listed dimensions may vary slightly from OE

BGR Part Number: ST-0539-4M-NC
620000700034, 32001468, 7010487

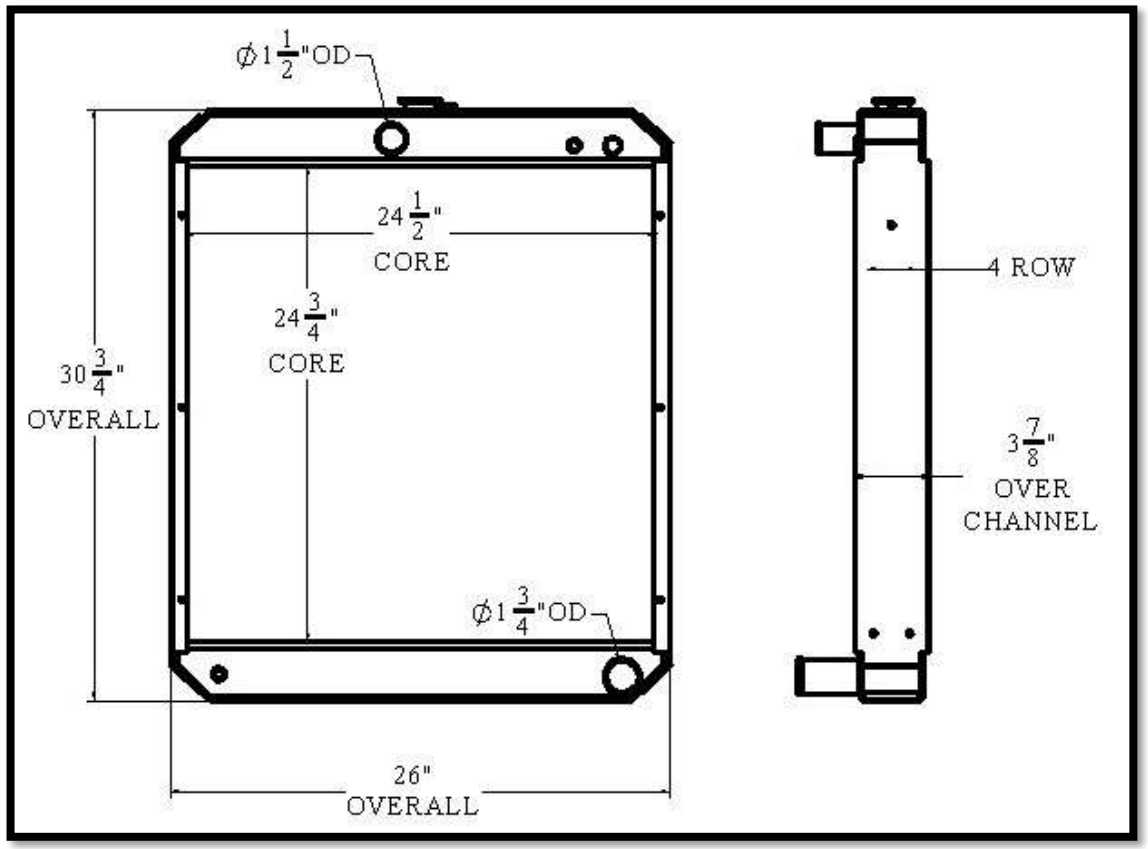

Overall Dimensions:30-3/4” X 26” X 3-7/8”
Core:24-3/4” X 24-1/2” X 4 ROW
Inlet:1-1/2”OD
Outlet:1-3/4”OD

ST539

Tel 1.800.774.2168
www.bgrradiator.com
BGR RADIATOR

BGR Part Number: ST-0540-5M-F
0D7825A

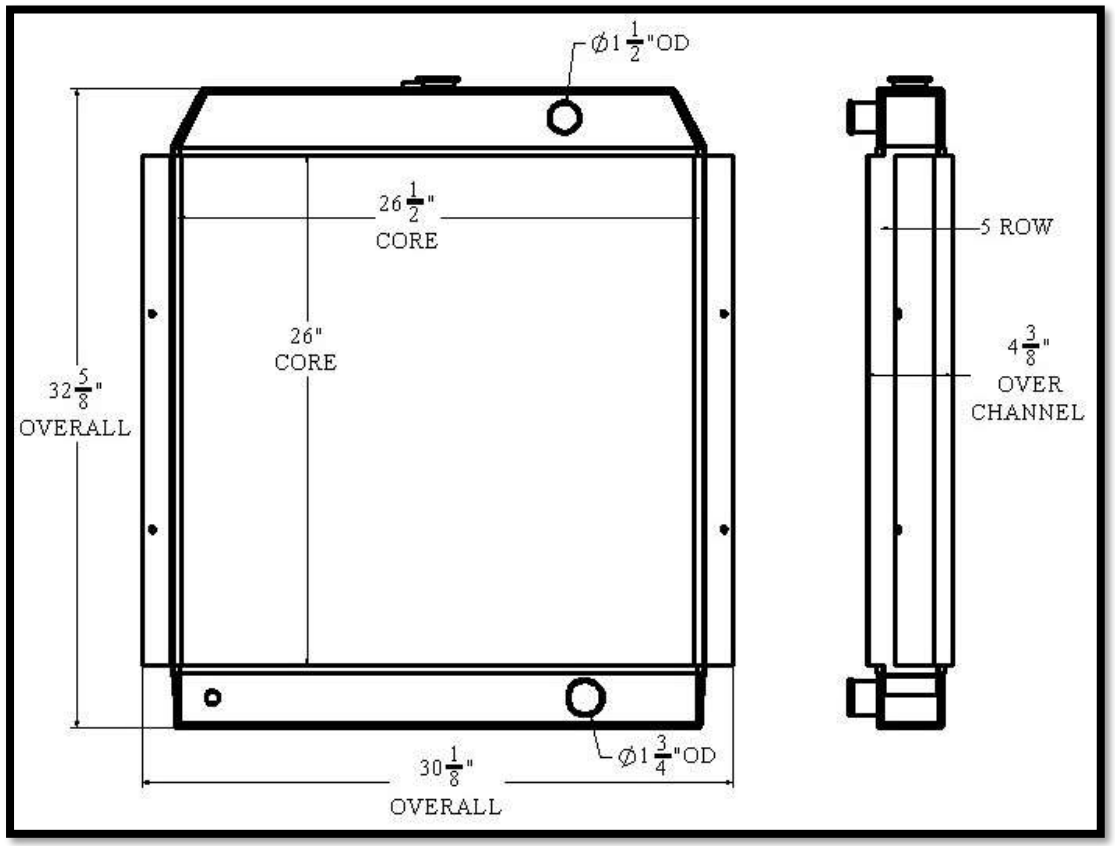

Overall Dimensions: 32-5/8” X 30-1/8” X 4-3/8”
Core:26” X 26-1/2” X 5 ROW
Inlet: 1-1/2”OD
Outlet: 1-3/4”OD

ST540

Listed dimensions may vary slightly from OE

BGR Part Number: ST-0541-4M-NC
R524787, 69000510, 99000513, 451074

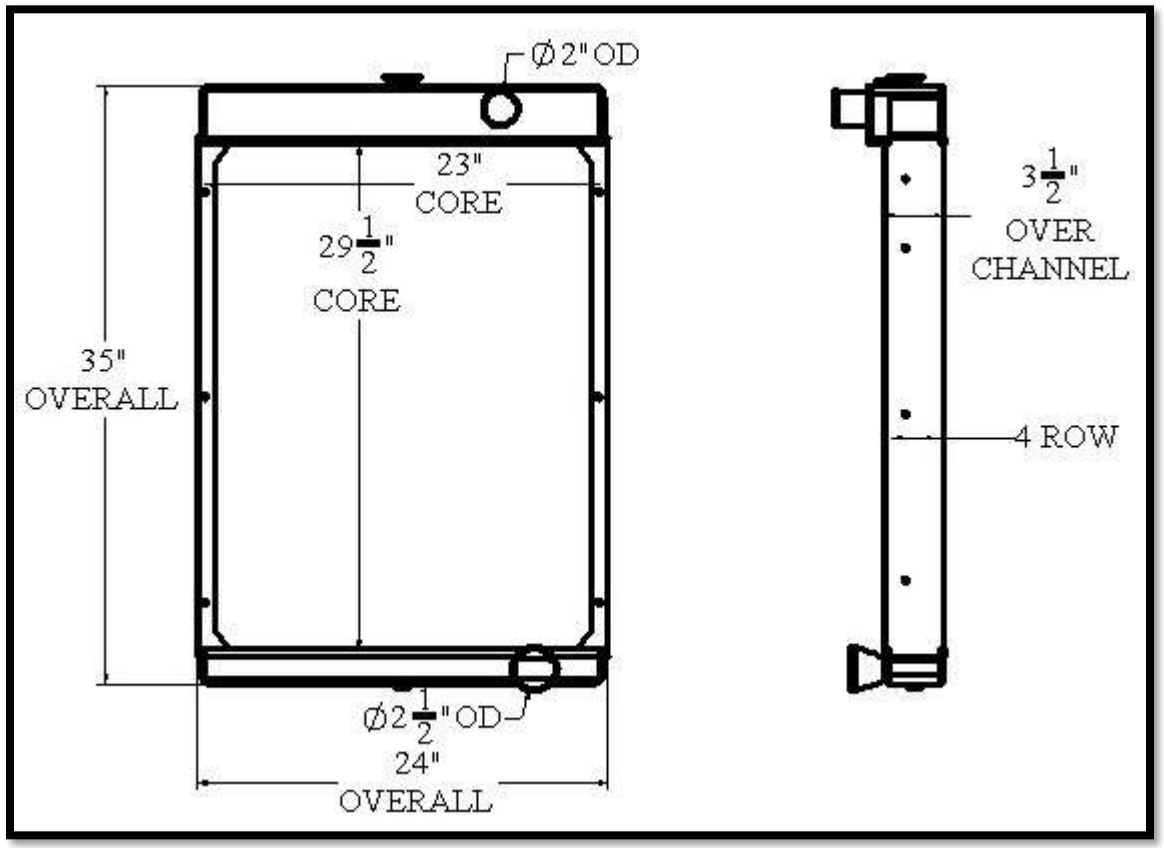

Overall Dimensions: 35” X 24” X 3-1/2”
Core: 29-1/2” X 23” X 4 ROW
Inlet: 2”OD
Outlet: 2-1/2”OD

Tel 1.800.774.2168
www.bgrradiator.com

BGR Part Number: ST-0542-8M-NC
R524787 69000510 99000513 451074

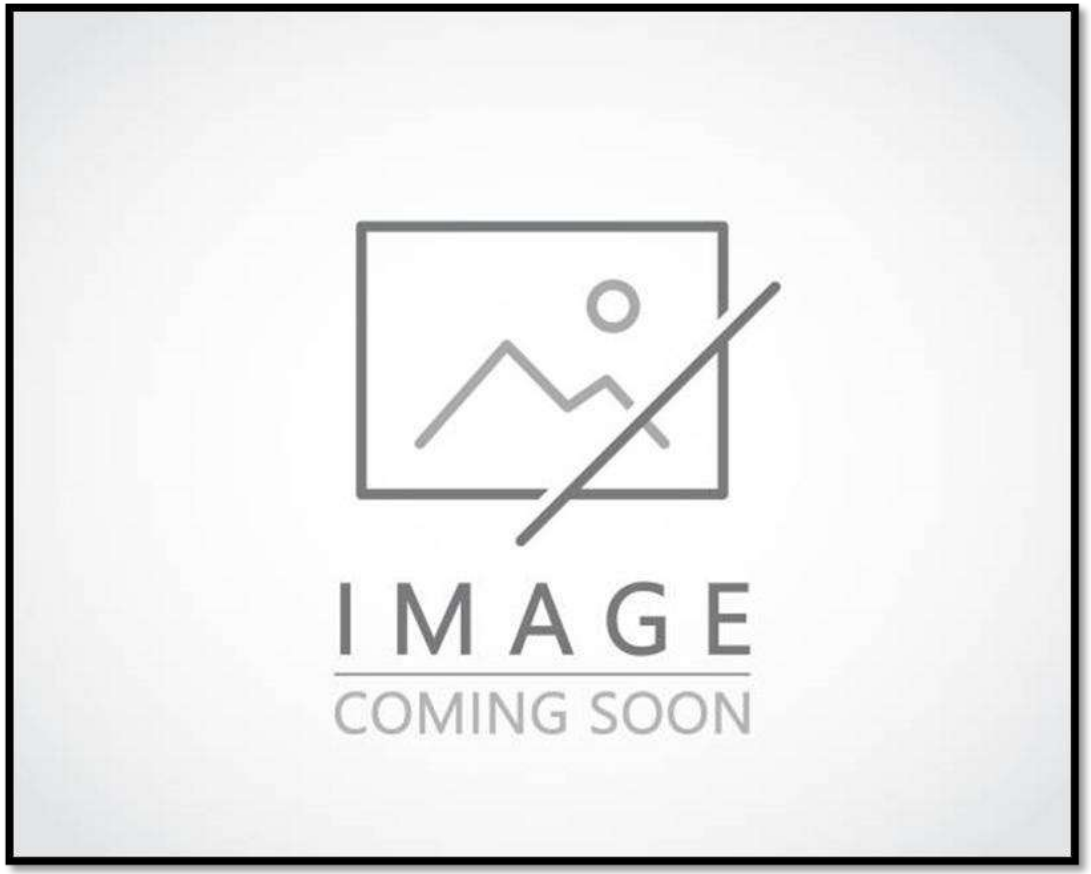

Overall Dimensions:
Core:
Inlet:
Outlet:

ST541

Listed dimensions may vary slightly from OE

ST542

BGR Part Number: ST-0543-4M-NC
YB37532, U808957K

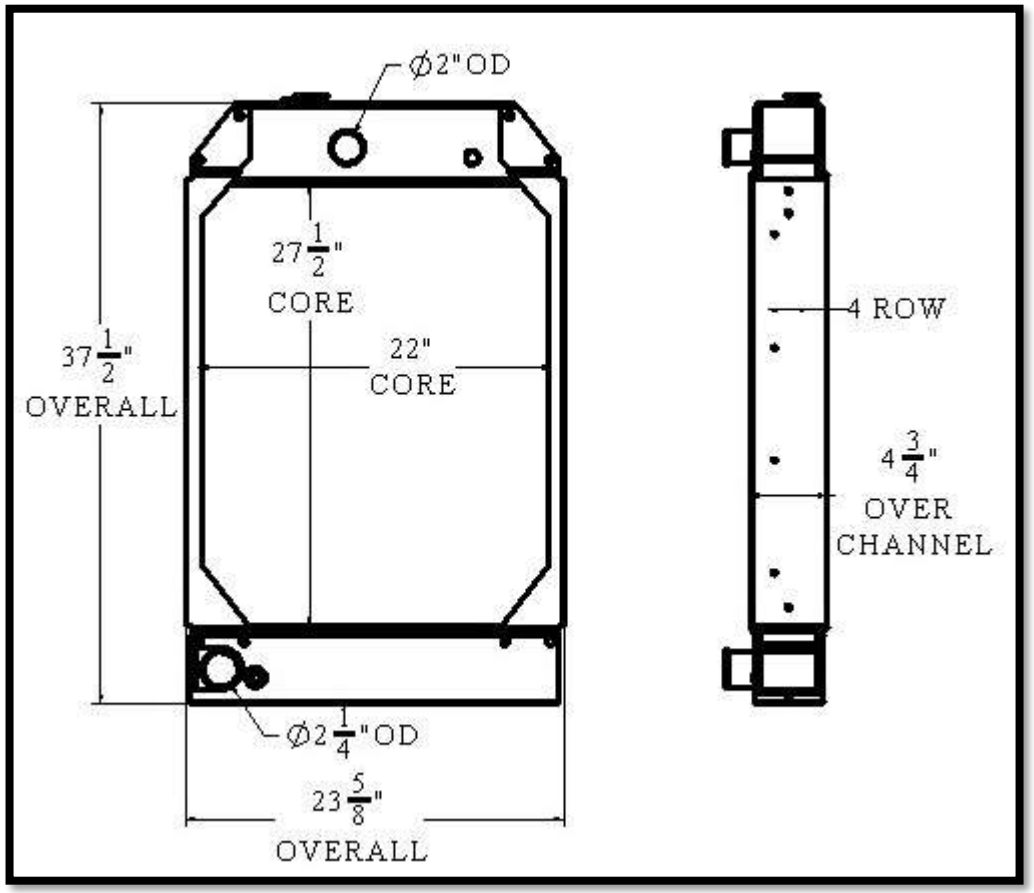

Overall Dimensions: 37-1/2” X 23-5/8” X 4-3/4”
Core: 27-1/2” X 22” X 4 ROW
Inlet: 2”OD
Outlet: 2-1/4”OD

Tel 1.800.774.2168
www.bgrradiator.com

BGR Part Number: ST-0544-4M-F

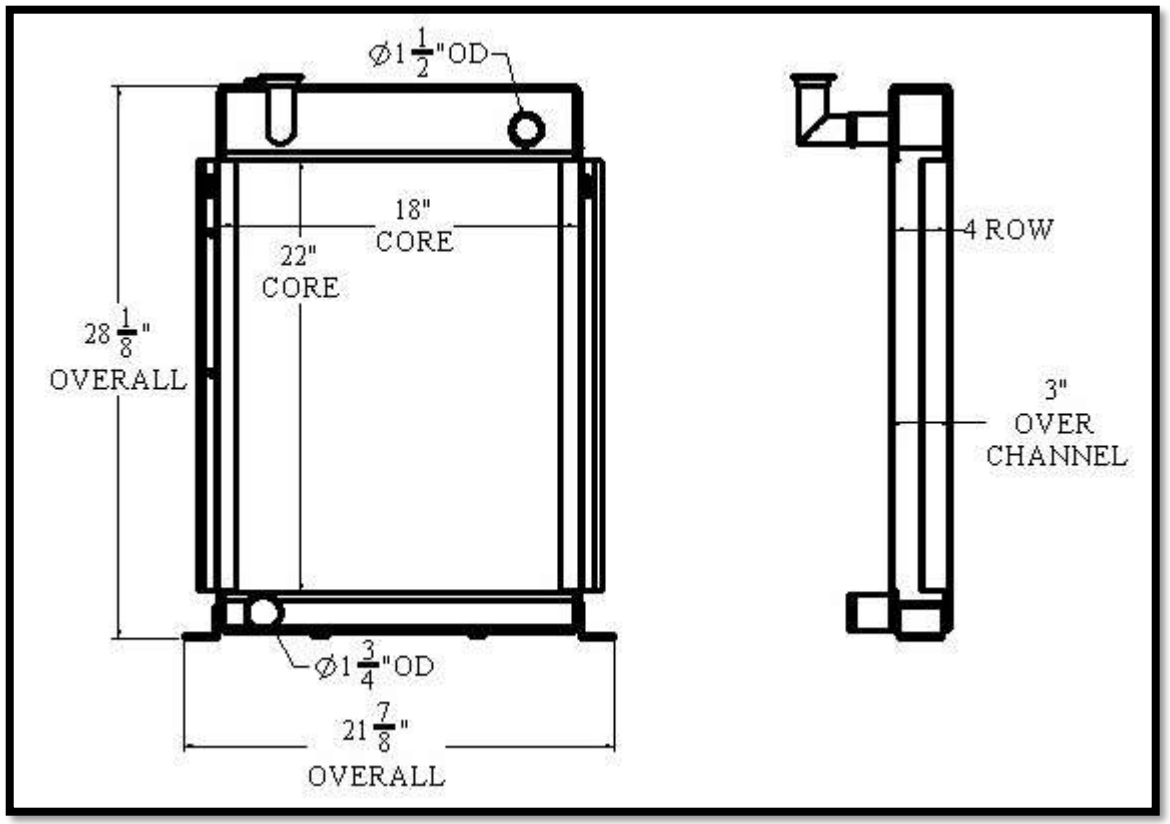

Overall Dimensions: 28-1/8” X 21-7/8” X 3”
Core: 22” X 18” X 4 ROW
Inlet: 1-1/2”OD
Outlet: 1-3/4”OD

ST543

Listed dimensions may vary slightly from OE

ST544

BGR Part Number: ST-0545-6M-NC
GM75705 REV B

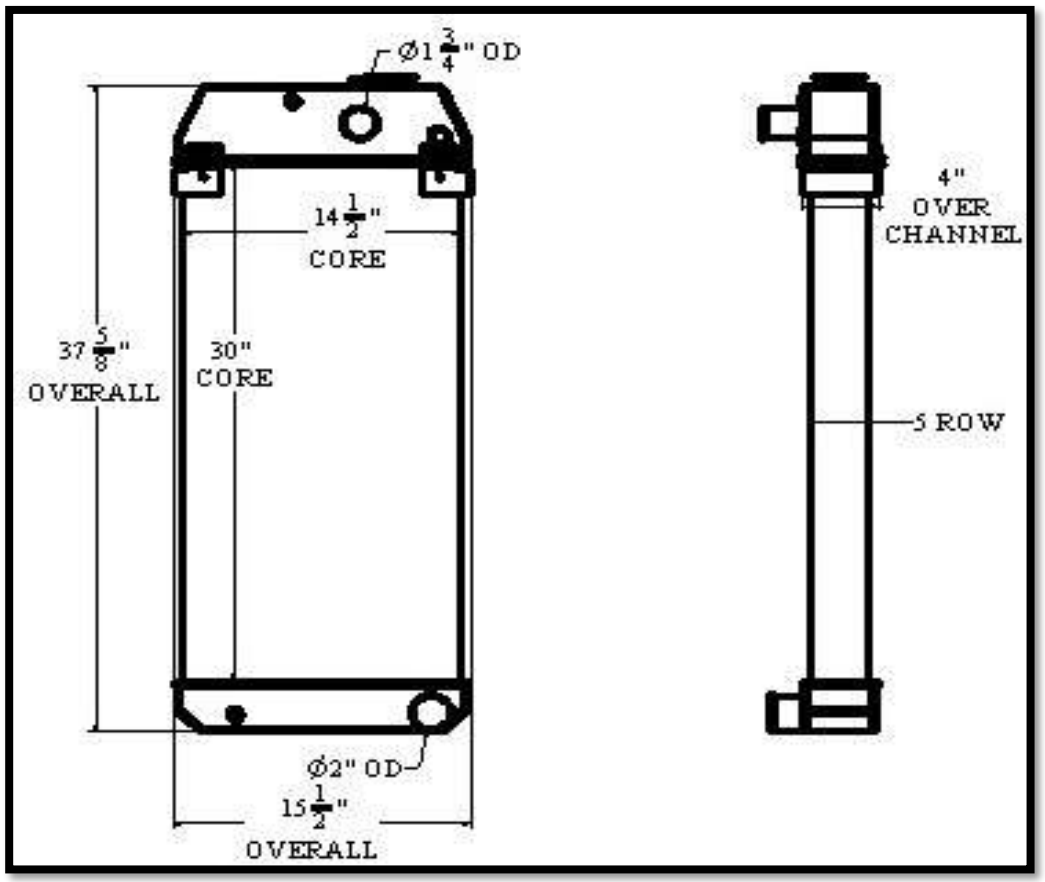

Overall Dimensions: 37-5/8” X 15-1/2” X 4”
Core: 30” X 14-1/2” X 5 ROW
Inlet: 1-3/4” OD
Outlet: 2-1/4” OD

Tel 1.800.774.2168
www.bgrradiator.com

BGR Part Number: ST-0546-3M-NC
RS-6644, 55106-01-003

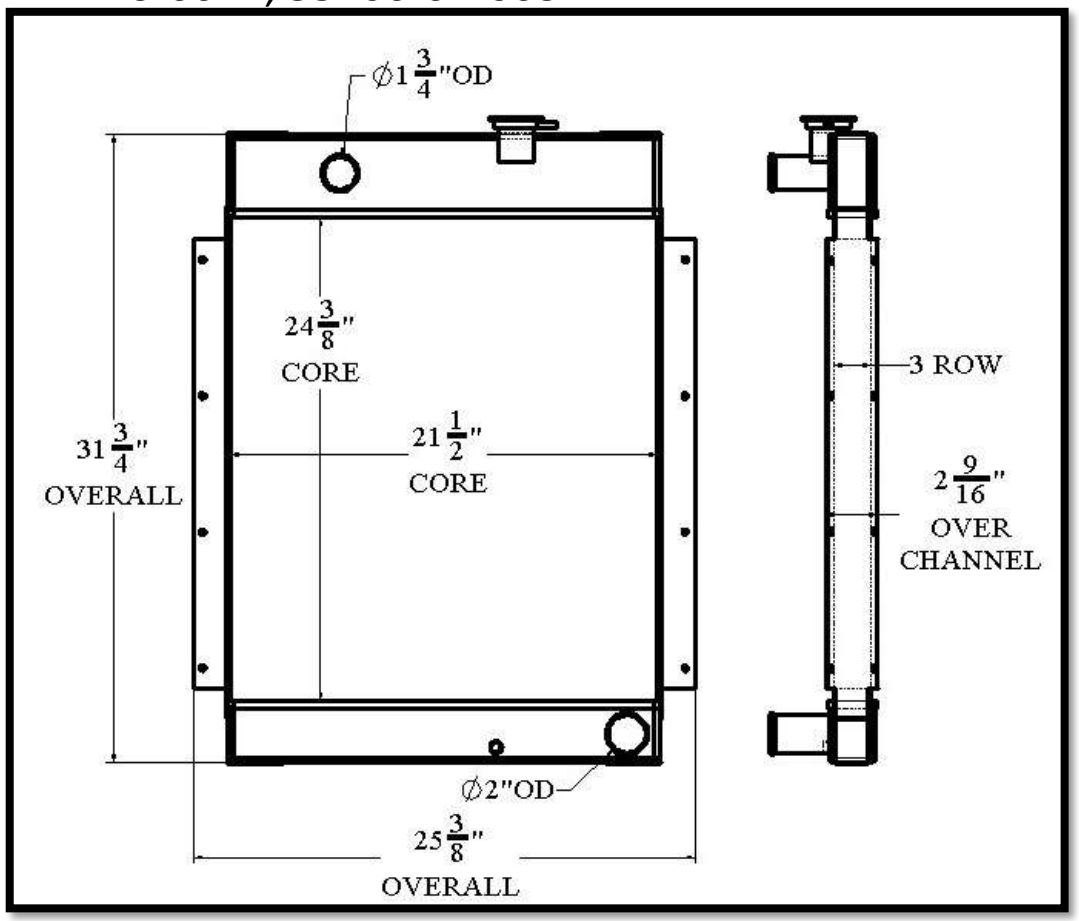

Overall Dimensions: 31-3/4” X 25-3/8” X 2-9/16”
Core: 24-3/8” X 21-1/2” X 3 ROW
Inlet: 1-3/4”OD
Outlet: 2”OD

Listed dimensions may vary slightly from OE

BGR Part Number: ST-0547-4M-NC

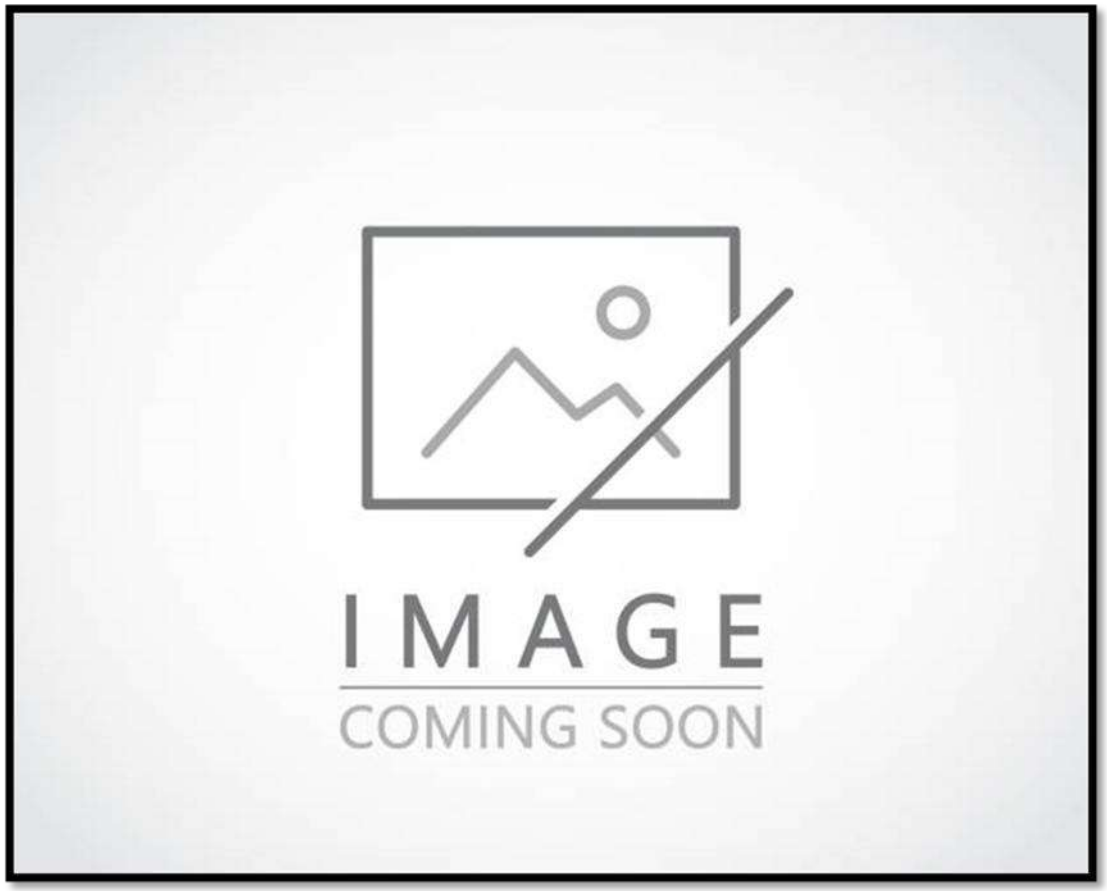

Overall Dimensions:
Core:
Inlet:
Outlet:

ST547

Tel 1.800.774.2168
www.bgrradiator.com

BGR Part Number: ST-0548-4M-F

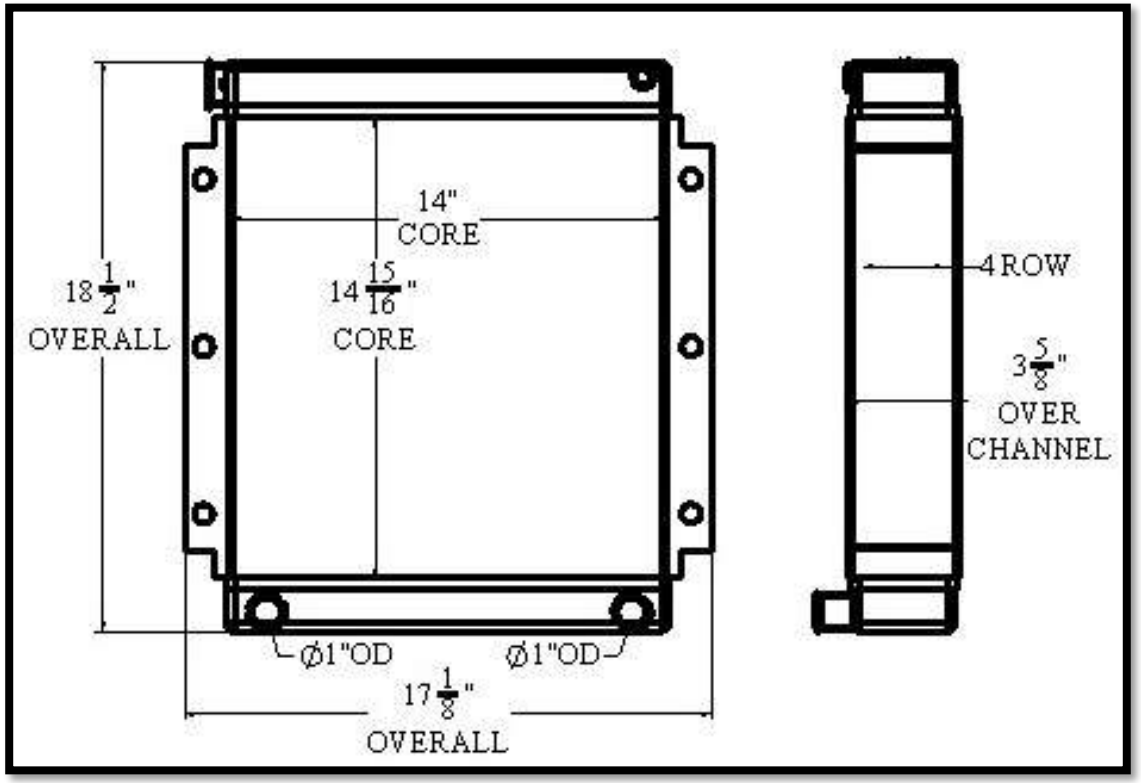

Overall Dimensions: 18-1/2” X 17-1/8” X 3-5/8”
Core: 14-15/16” X 14” X 4 ROW
Inlet: 1”OD
Outlet: 1”OD

Listed dimensions may vary slightly from OE

ST548

BGR Part Number: ST-0549-3M-F
0F2608C, 14140, CPL-70D.1031.100-2

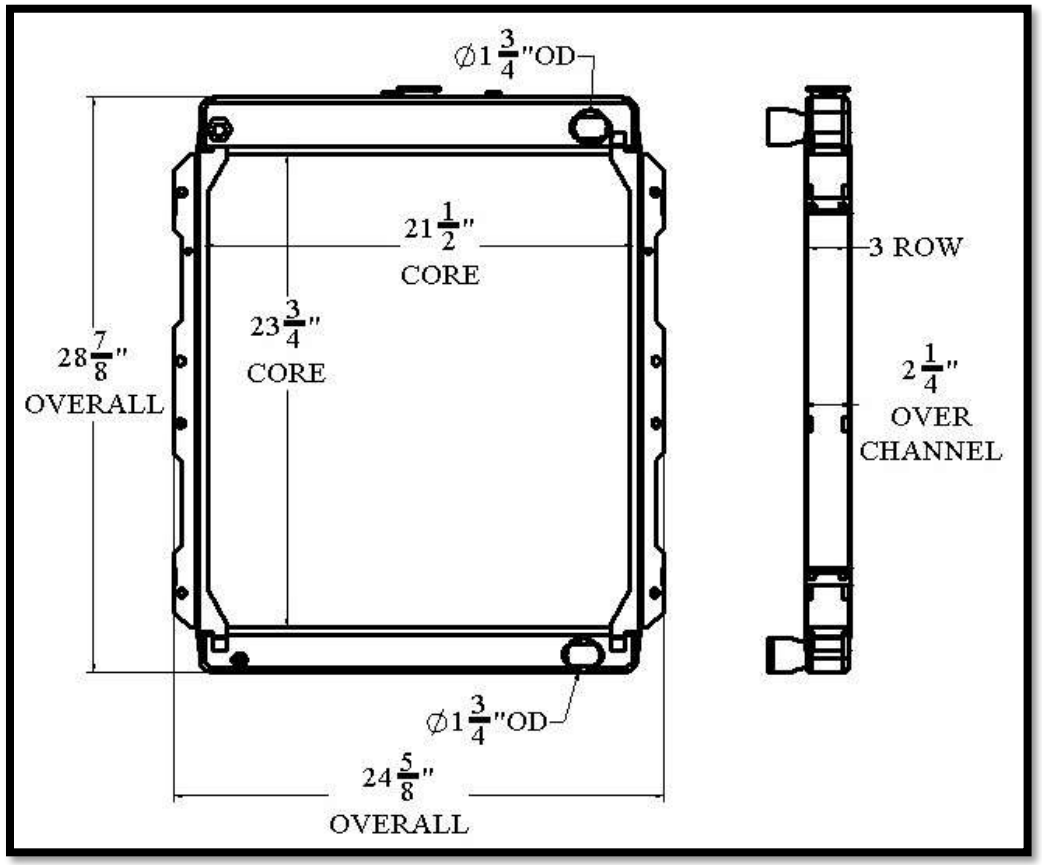

Overall Dimensions: 28-7/8” X 24-5/8” X 2-1/4”
Core: 23-3/4” X 21-1/2” X 3 ROW
Inlet: 1-3/4”OD
Outlet: 1-3/4”OD

Tel 1.800.774.2168
www.bgrradiator.com
BGR RADIATOR

BGR Part Number: ST-0550-4M-NC

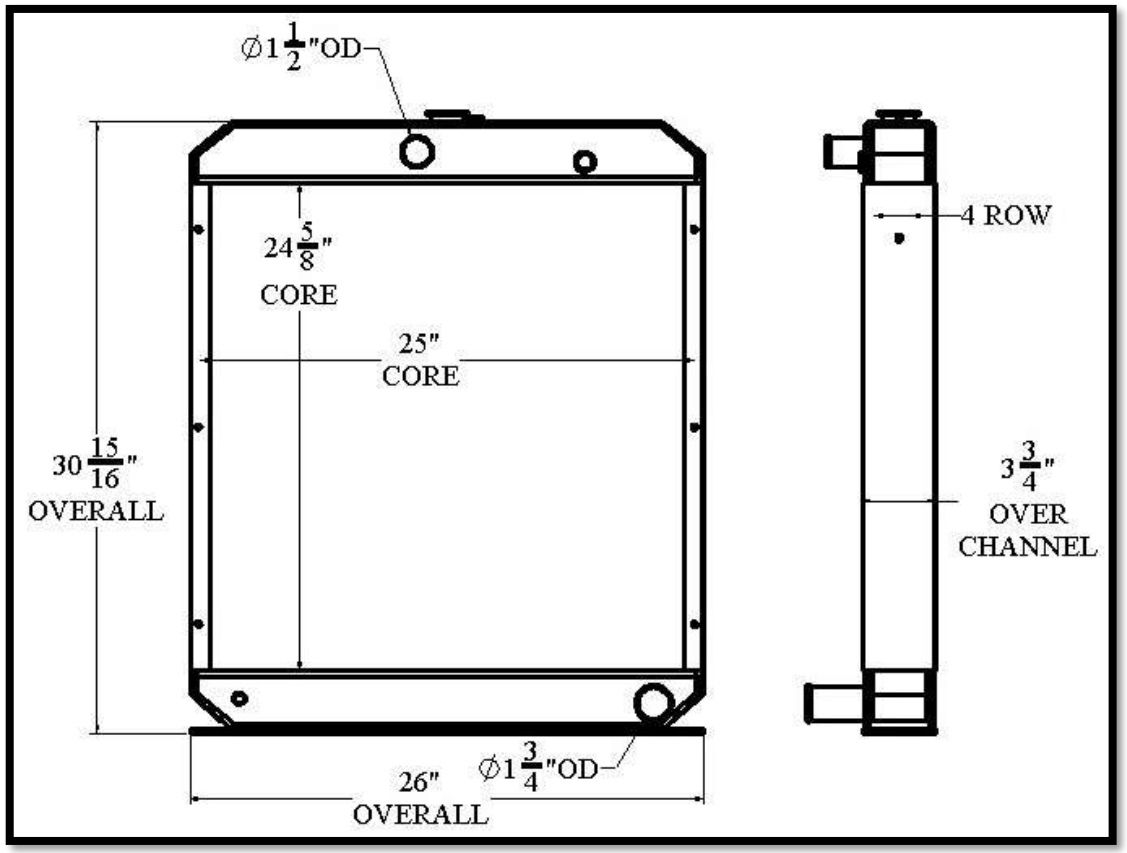

Overall Dimensions: 30-15/16” X 26” X 3-3/4”
Core: 24-5/8” X 25” X 4 ROW
Inlet: 1-1/2”OD
Outlet: 1-3/4”OD

ST549

Listed dimensions may vary slightly from OE

ST550

BGR Part Number: ST-0551-4M-EF

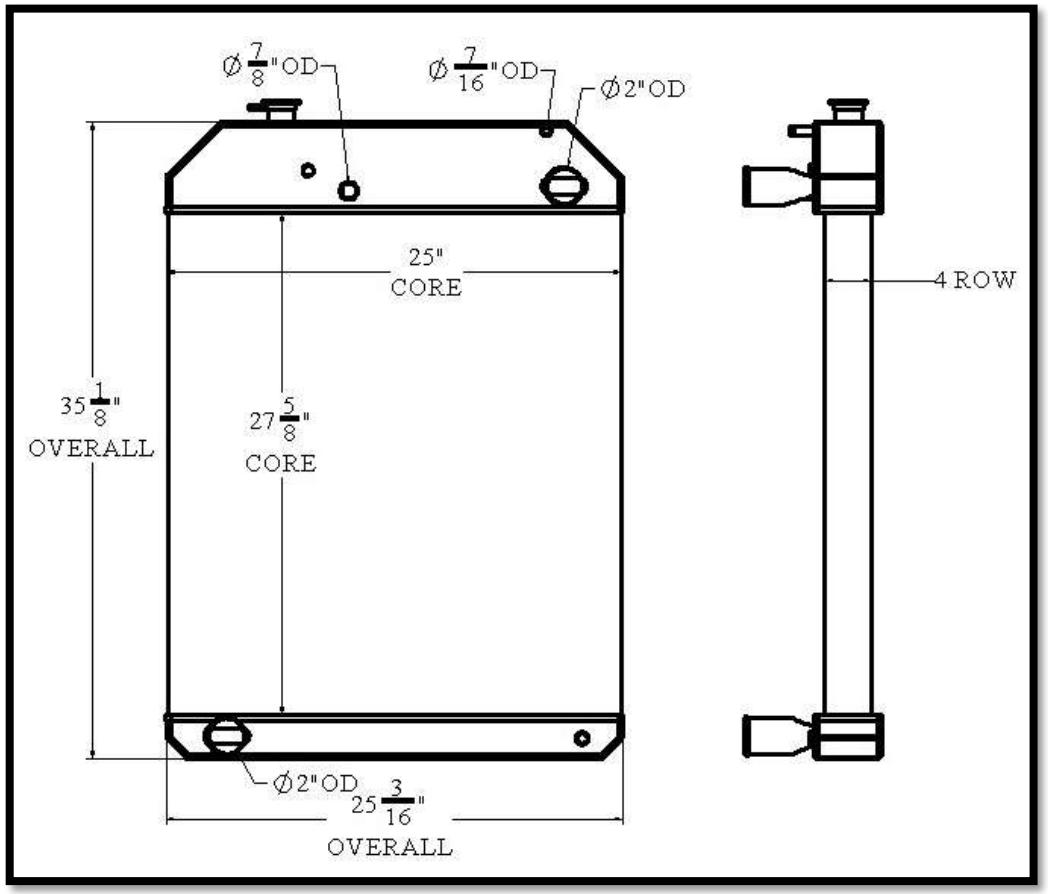

Overall Dimensions: 35-1/8” X 25-3/16”
Core: 27-5/8” X 25” X 4 ROW
Inlet: 2”OD, 7/8”OD, 7/16”OD
Outlet:2”OD

Tel 1.800.774.2168
www.bgrradiator.com

BGR Part Number: ST-0552

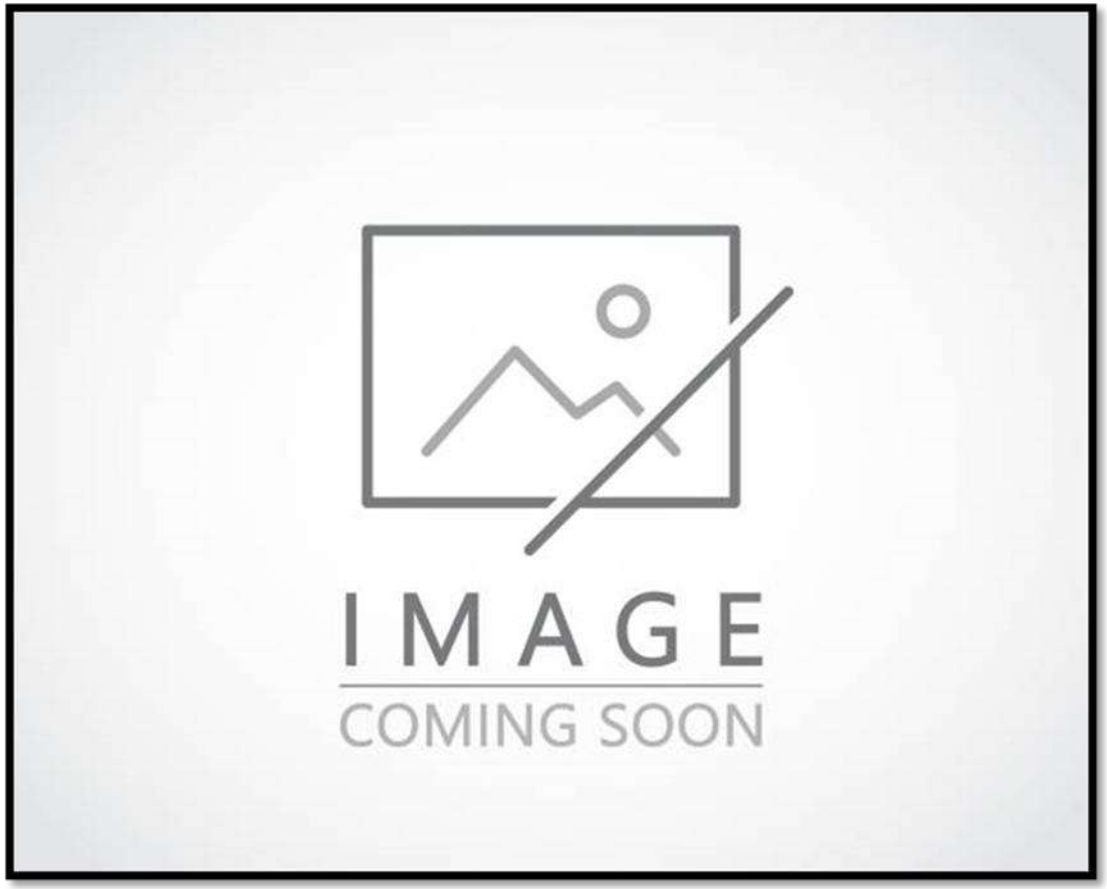

Overall Dimensions:
Core:
Inlet:
Outlet:

ST551

Listed dimensions may vary slightly from OE

ST552

BGR Part Number: ST-0553-5M-NC

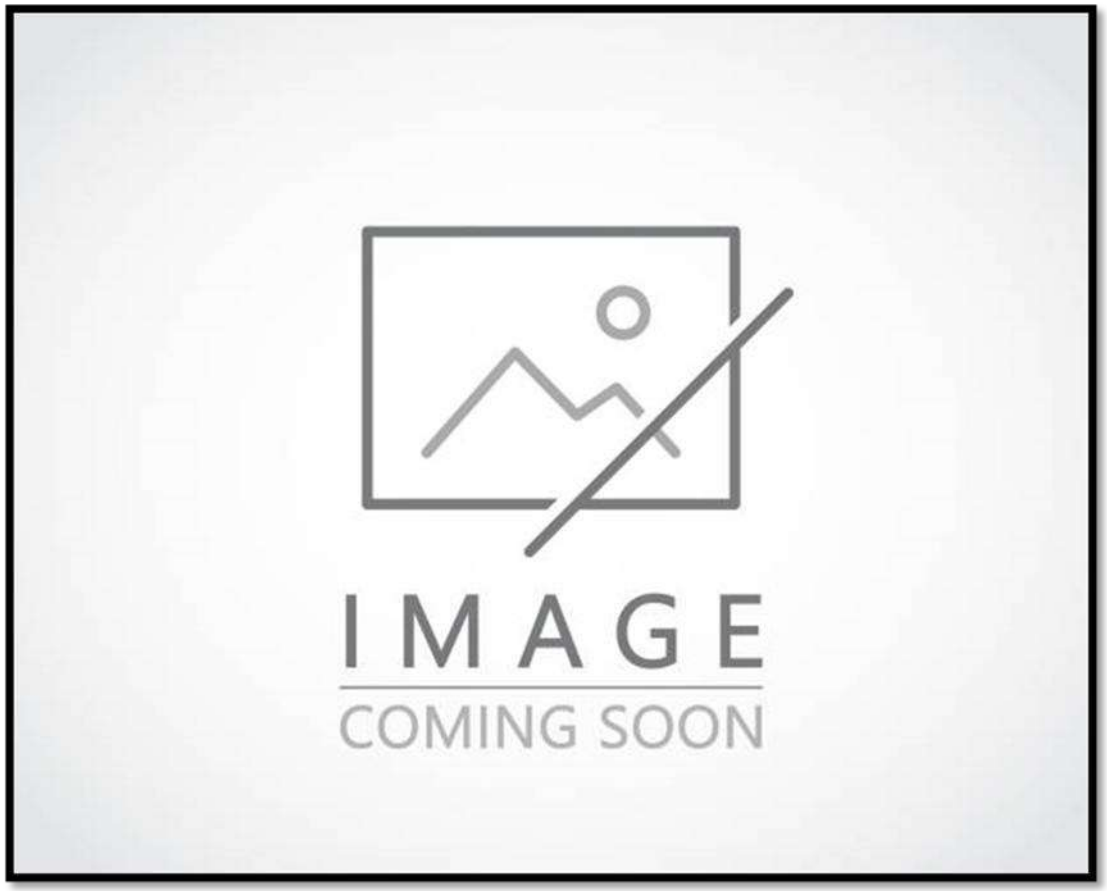

Overall Dimensions:
Core:
Inlet:
Outlet:

ST553

Tel 1.800.774.2168
www.bgrradiator.com

BGR RADIATOR

BGR Part Number: ST-0554-6M-NC
1A10783, MODINE 030181

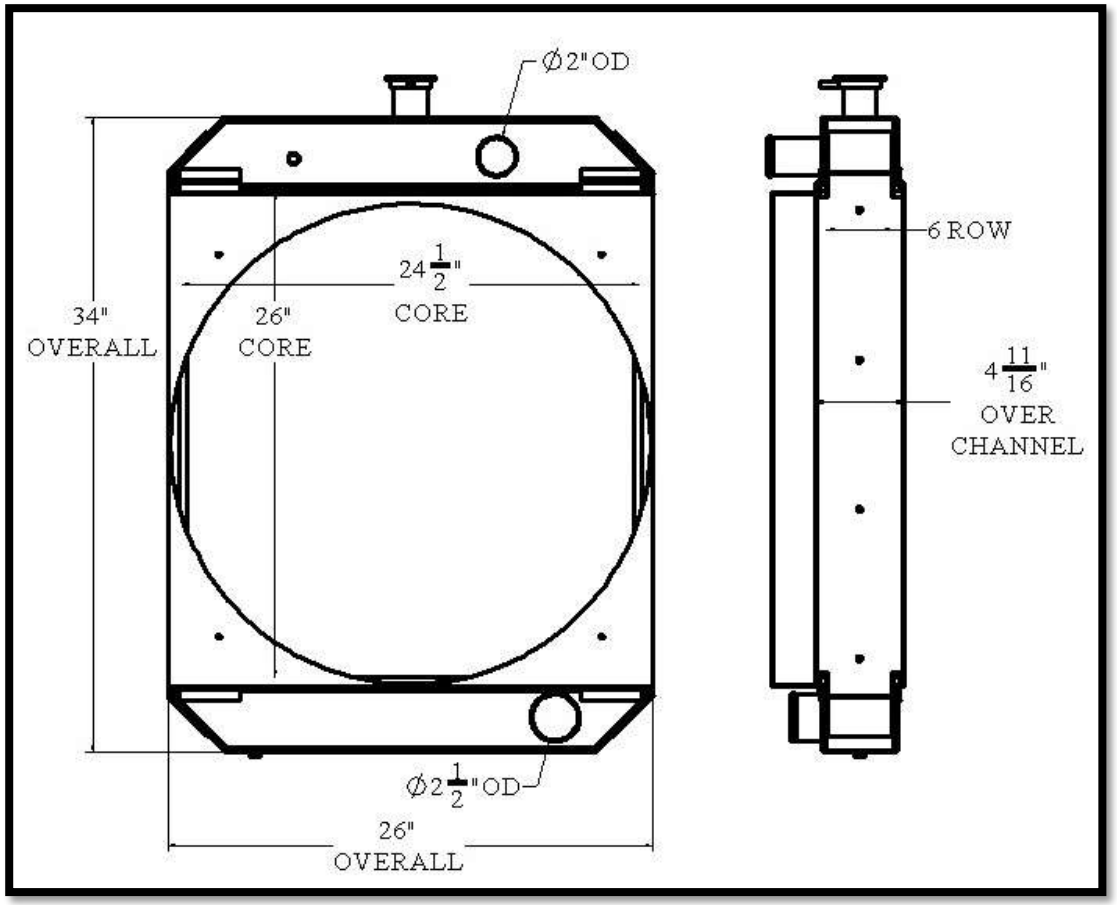

Overall Dimensions: 34” X 26” X 4-11/16”
Core: 26” X 24-1/2” X 6 ROW
Inlet: 2” OD
Outlet: 2-1/2”OD

ST554

Listed dimensions may vary slightly from OE

BGR Part Number: ST-0555-2M-EF

Cummins QSB5-J8.9,PA066Y500,S22127056,V503245

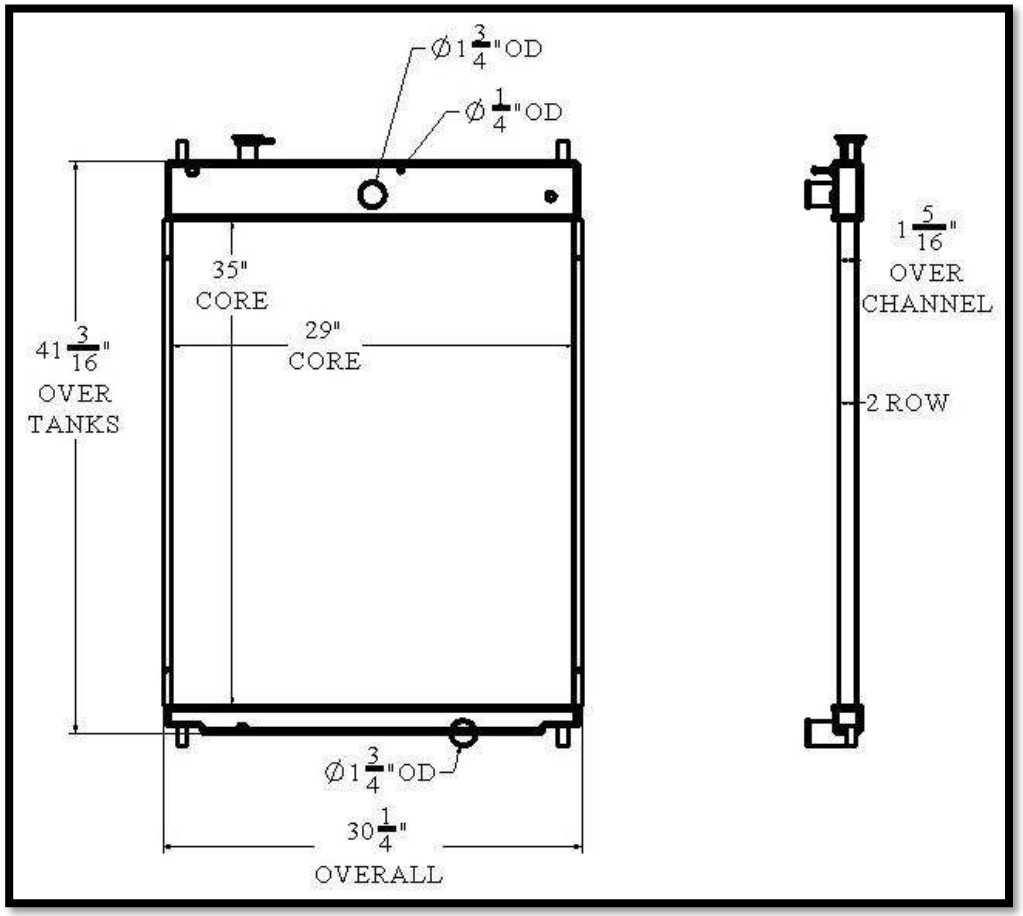

Overall Dimensions: 41-3/16” X 30-1/4”” X 1-5/16”

Core:35” X 29” X 2 ROW

Inlet: 1-3/4”OD, ¼”OD

Outlet:1-3/4”OD

Tel 1.800.774.2168
www.bgrradiator.com
BGR RADIATOR

BGR Part Number: ST-0556-5M-NC

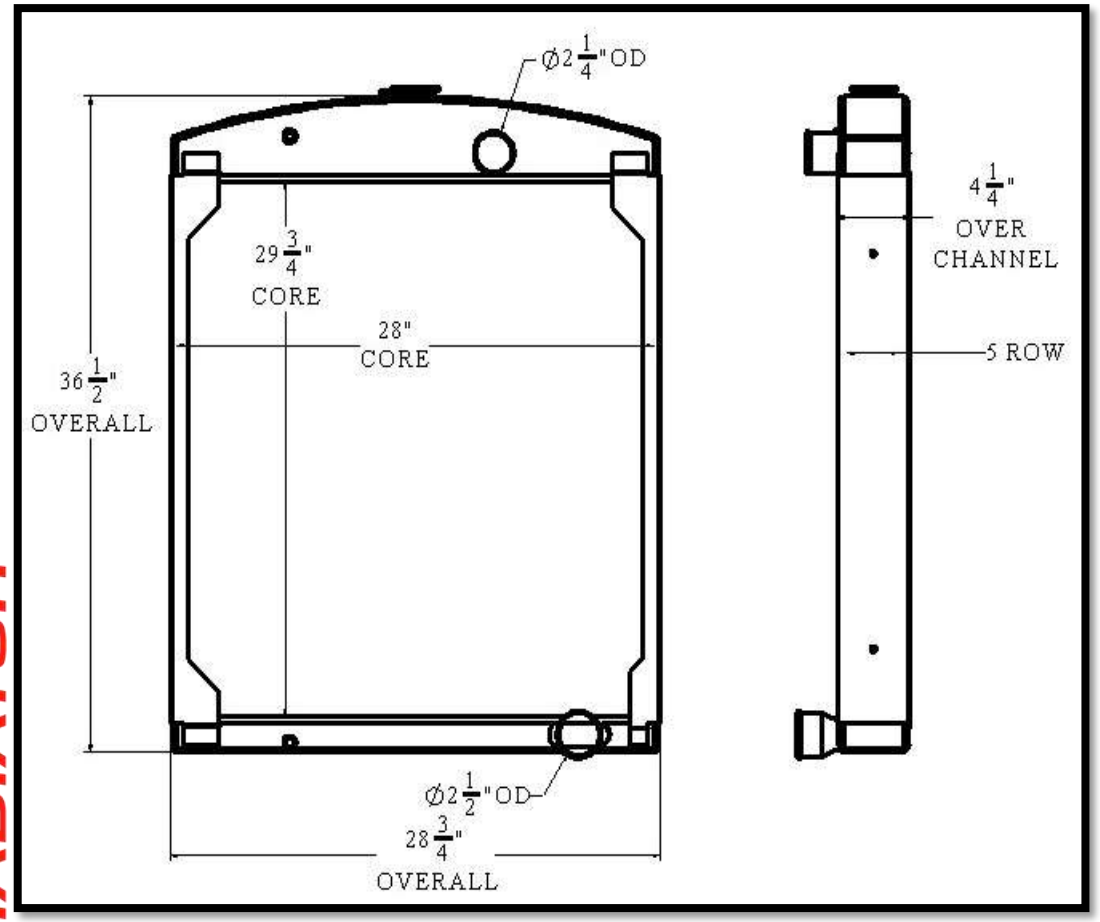

Overall Dimensions: 36-1/2” X 28-3/4” X 4-1/4”

Core: 29-3/4” X 28” X 5 ROW

Inlet:2-1/4”

Outlet: 2-1/2”

ST555

Listed dimensions may vary slightly from OE

ST556

BGR Part Number: ST-0557-5M-F
0G1933A, 0A6164

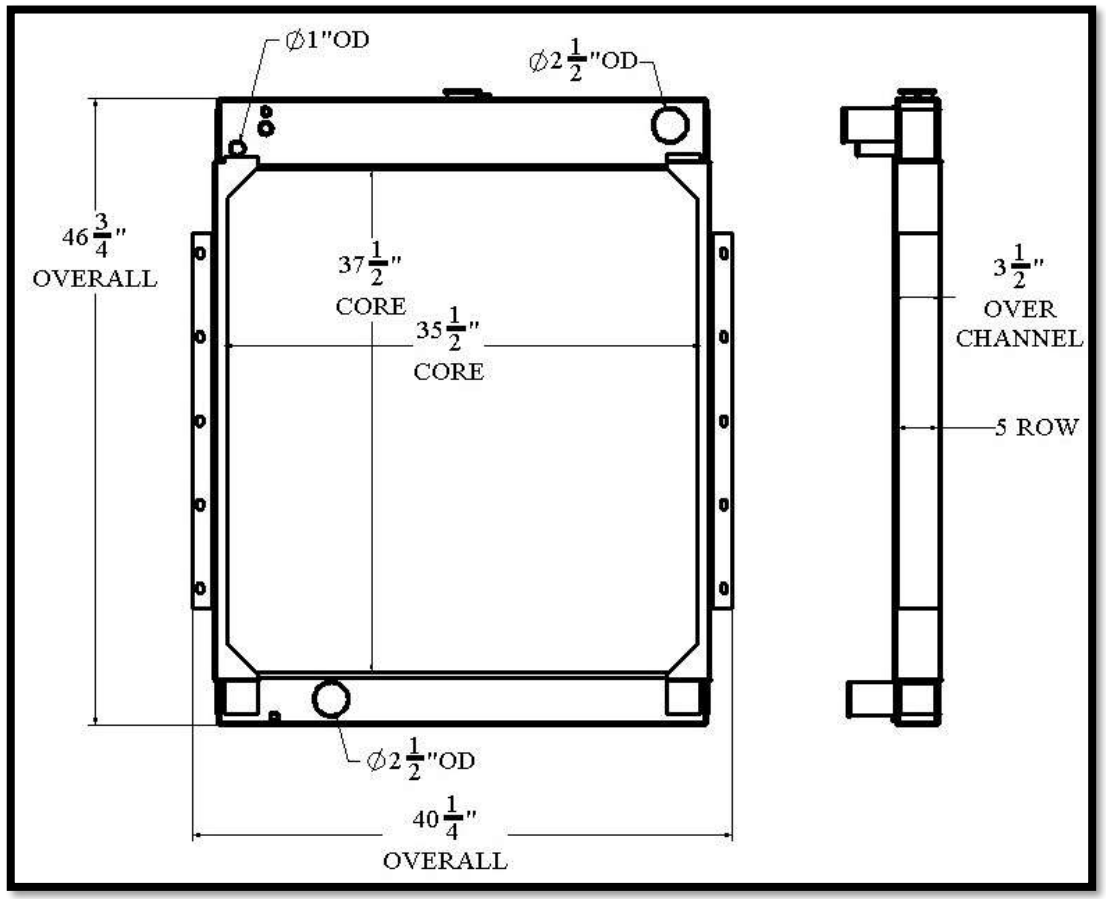

Overall Dimensions: 46-3/4” X 40-1/4” X 3-1/2”
Core:37-1/2” X 35-1/2” X 5 ROW
Inlet: 2-1/2”OD, 1”OD
Outlet: 2-1/2”OD

Tel 1.800.774.2168
www.bgrradiator.com

BGR Part Number: ST-0558-7M-NC
RS-6655

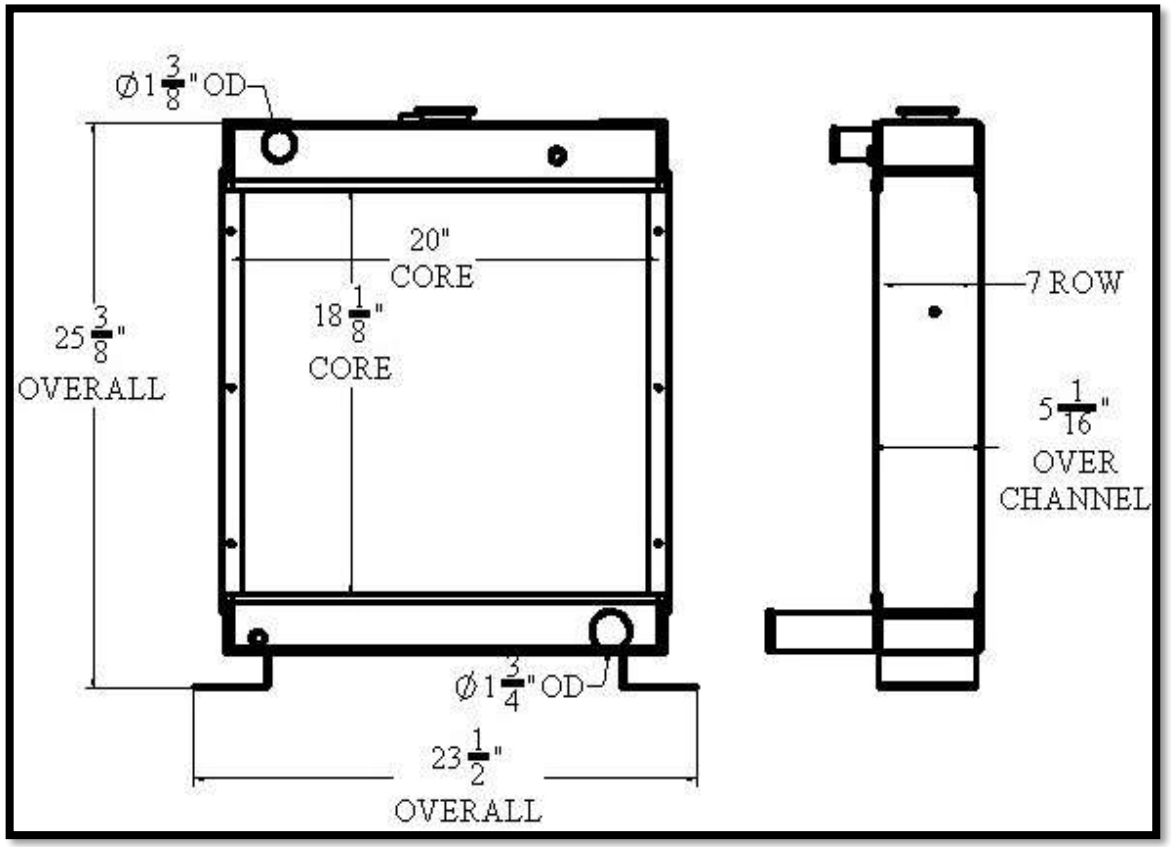

Overall Dimensions: 25-3/8” X 23-1/2” X 5-1/16”
Core: 18-1/8” X 20” X 7 ROW
Inlet: 1-3/8”OD
Outlet: 1-3/4”OD

ST557

Listed dimensions may vary slightly from OE

ST558

BGR Part Number: ST-0559-4M-EF

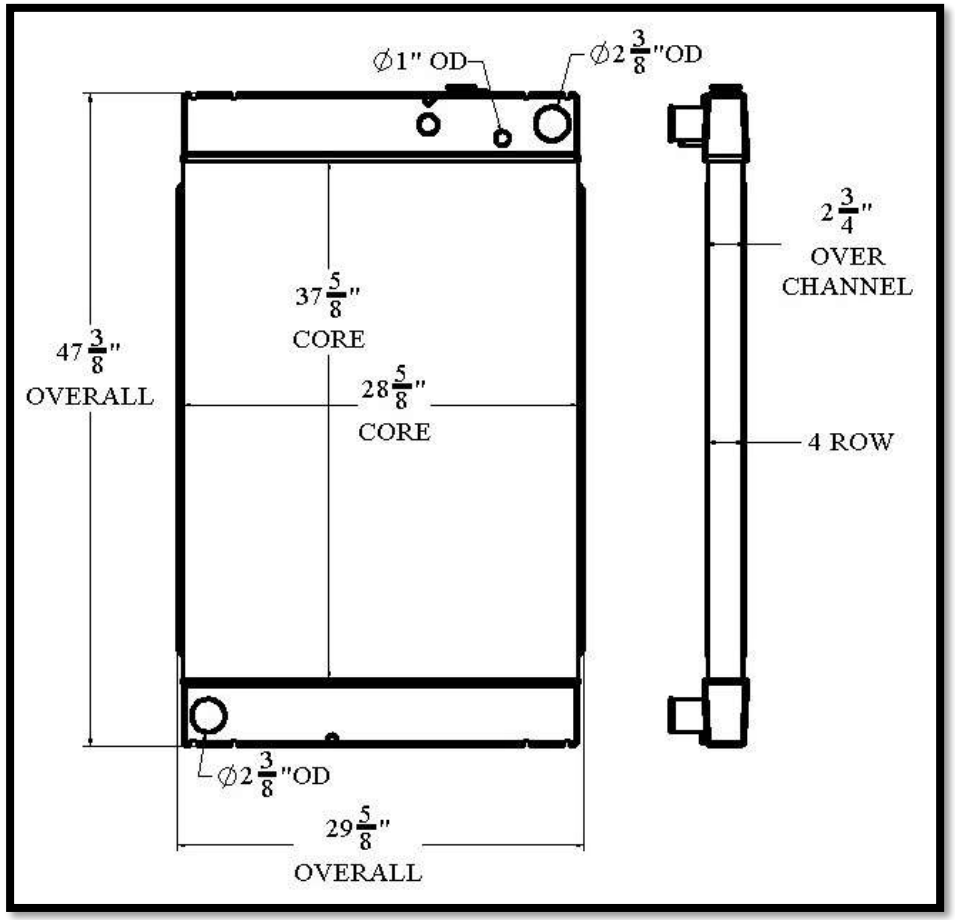

Overall Dimensions: 43-3/8” X 29-5/8” X 2-3/4”
Core: 37-5/8” X 28-5/8” X 4 ROW
Inlet: 2-3/8”OD, 1”OD
Outlet: 2-3/8” OD

Tel 1.800.774.2168
www.bgrradiator.com

BGR Part Number: ST-0560-5M-NC

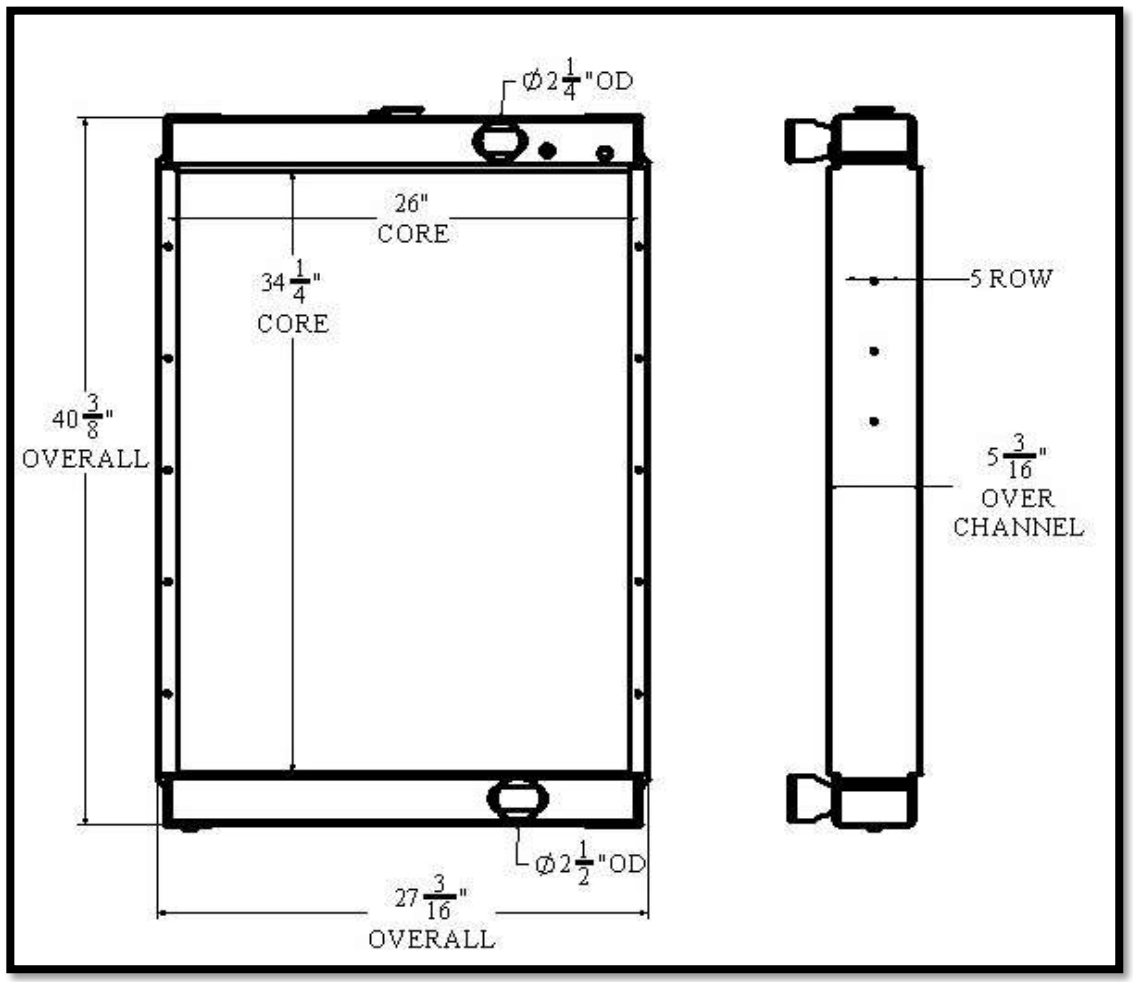

Overall Dimensions: 40-3/8” X 27-3/16” X 5-3/16”
Core: 34-1/4” X 26” X 5 ROW
Inlet: 2-1/4”
Outlet: 2-1/2”

ST559

Listed dimensions may vary slightly from OE

ST560

BGR Part Number: ST-0561-3M-EF

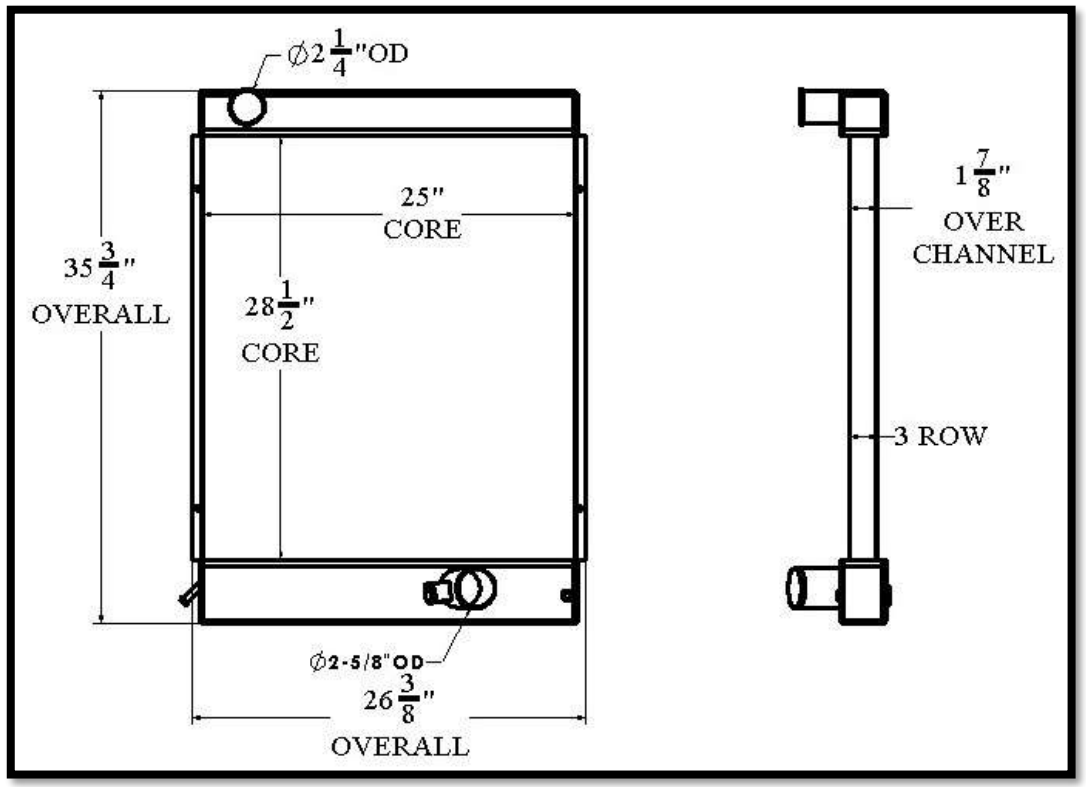

Overall Dimensions: 35-3/4” X 26-3/8” X 1-7/8”
Core: 28-1/2” X 25” X 3 ROW
Inlet: 2-1/4”OD
Outlet: 2-5/8” OD

ST561

Tel 1.800.774.2168
www.bgrradiator.com
BGR RADIATOR

BGR Part Number: ST-0562-6M-NC

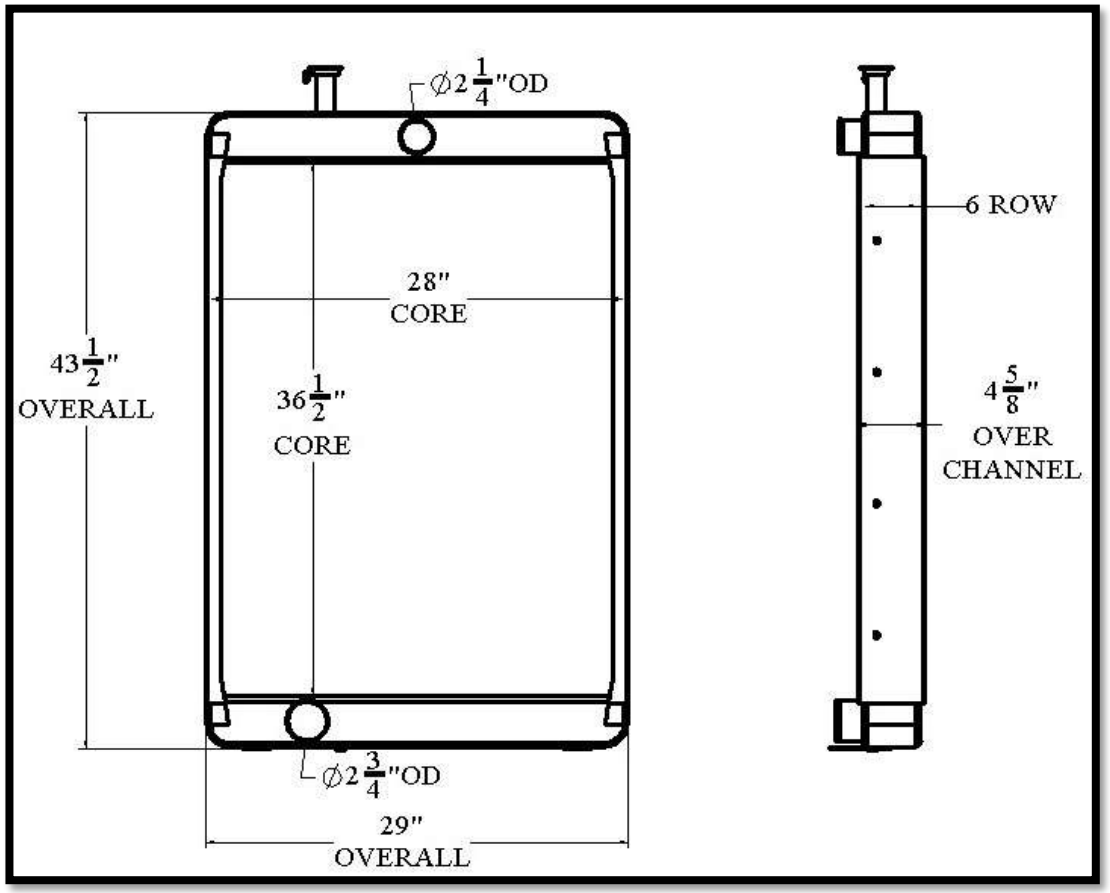

Overall Dimensions: 43-1/2” X 29” X 4-5/8”
Core: 36-1/2” X 28” X 6 ROW
Inlet: 2-1/4”
Outlet: 2-3/4”

ST562

Listed dimensions may vary slightly from OE

BGR Part Number: ST-0563-9M-NC
008454

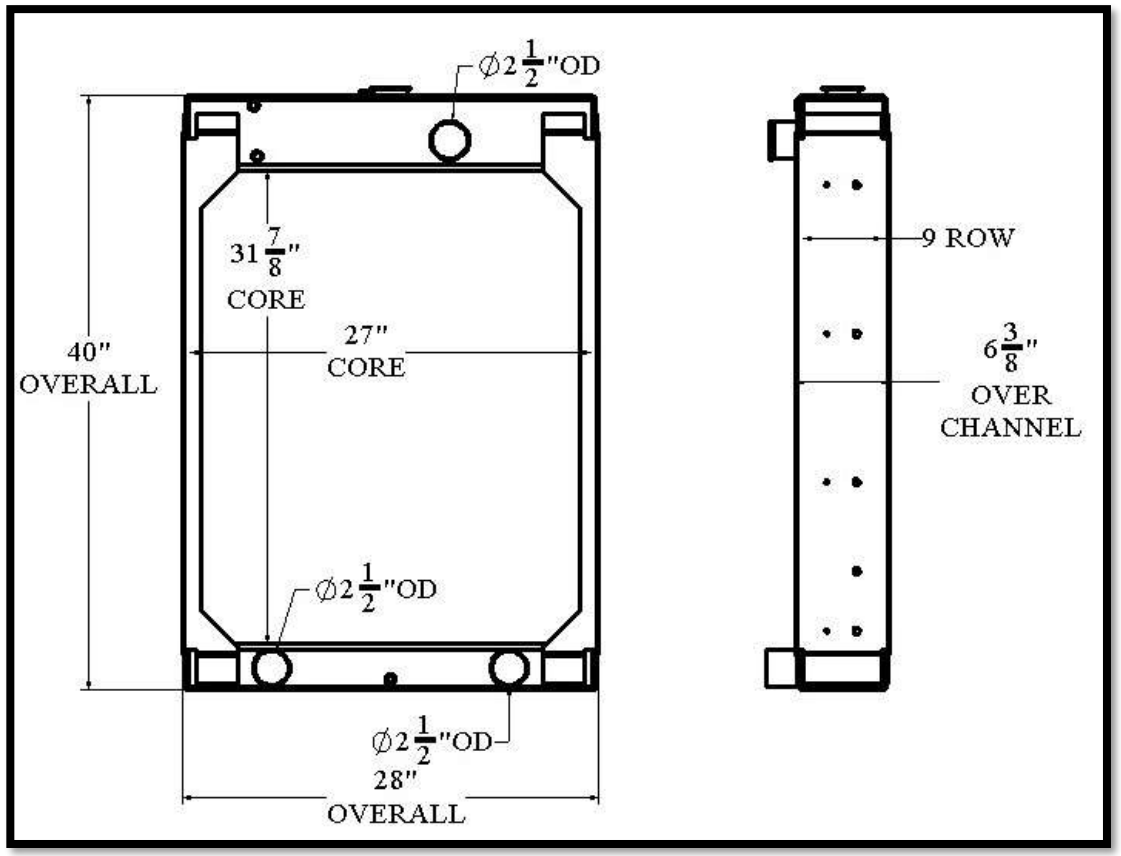

Overall Dimensions: 40” X 28” X 6-3/8”
Core: 31-7/8” X 27” X 9 ROW
Inlet: 2-1/2”OD
Outlet: 2-1/2” OD

Tel 1.800.774.2168
www.bgrradiator.com
BGR RADIATOR

BGR Part Number: ST-0564-7M-F

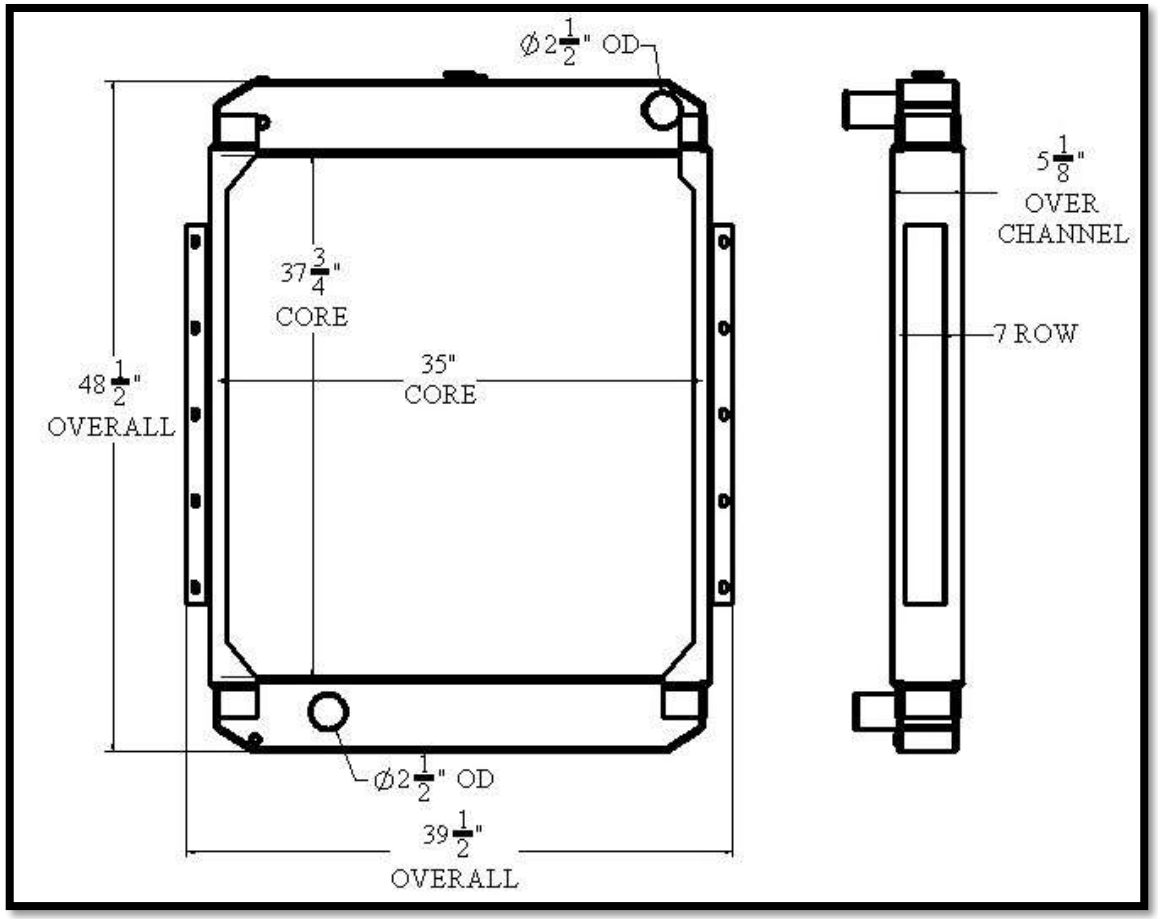

Overall Dimensions: 48-1/2” X 39-1/2” X 5-1/8”
Core: 37-3/4” X 35” X 7 ROW
Inlet: 2-1/2”OD
Outlet: 2-1/2”OD

ST563

Listed dimensions may vary slightly from OE

ST564

BGR Part Number: ST-0565-7M-NC
12229F0

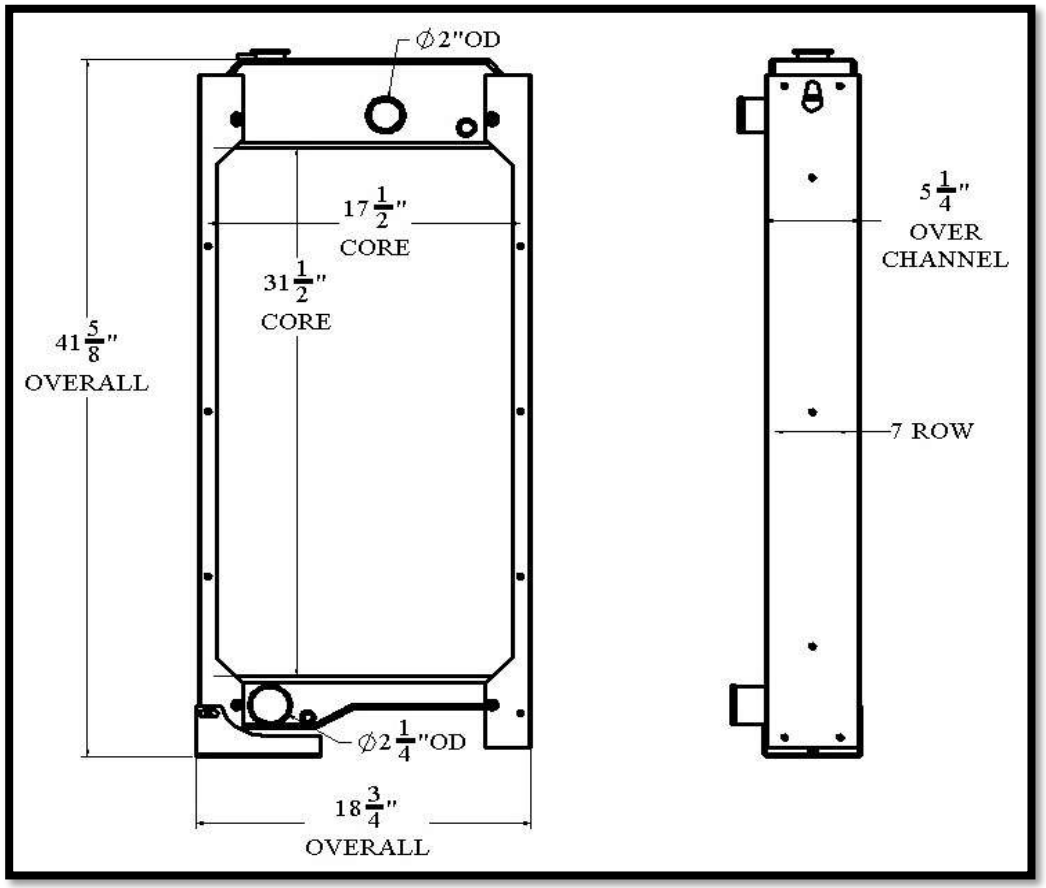

Overall Dimensions: 41-5/8” X 18-3/4” X 5-1/4”
Core: 31-1/2” X 17-1/2” X 7 ROW
Inlet: 2”OD
Outlet: 2-1/4”OD

Tel 1.800.774.2168
www.bgrradiator.com

BGR Part Number: ST-0566-5M-NC

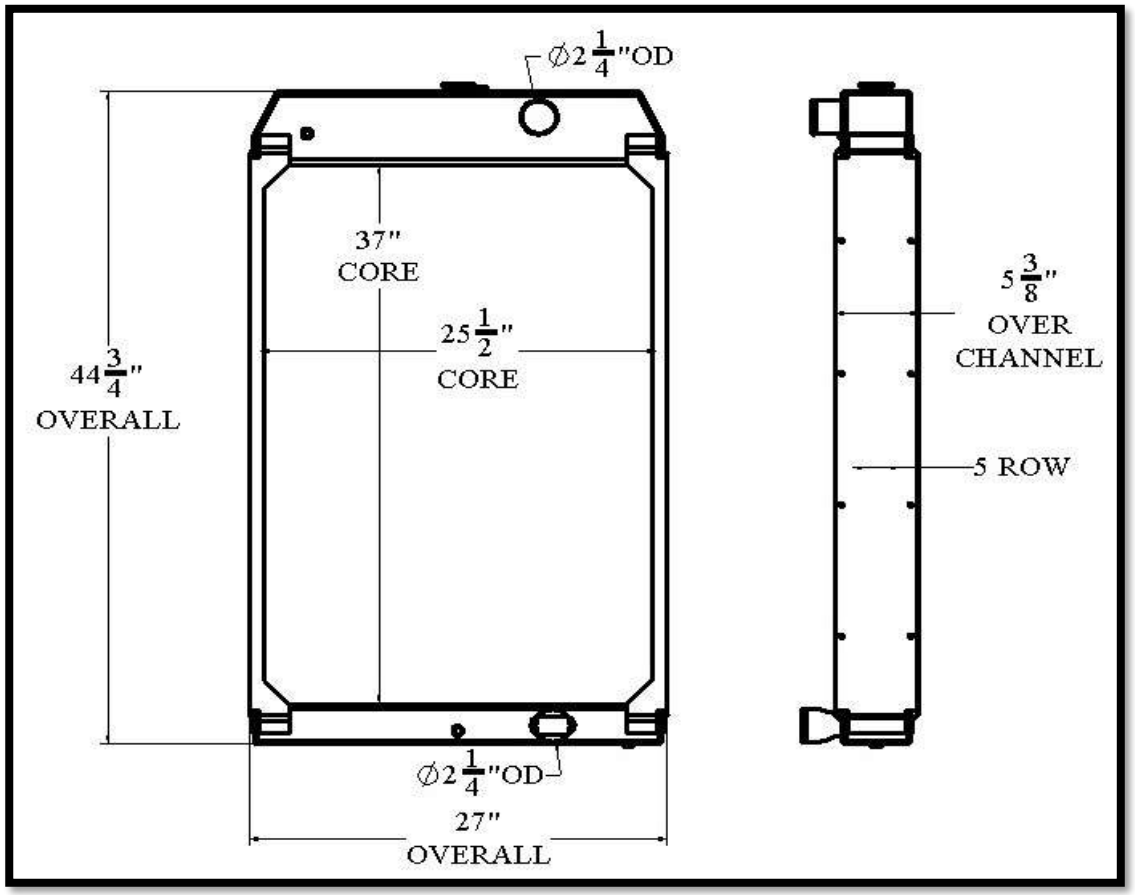

Overall Dimensions: 48-1/2” X 39-1/2” X 5-1/8”
Core: 37” X 25-1/2” X 5 ROW
Inlet: 2-1/4”
Outlet: 2-1/4”

ST565

Listed dimensions may vary slightly from OE

ST566

BGR Part Number: ST-0567-9M-F
A051X193

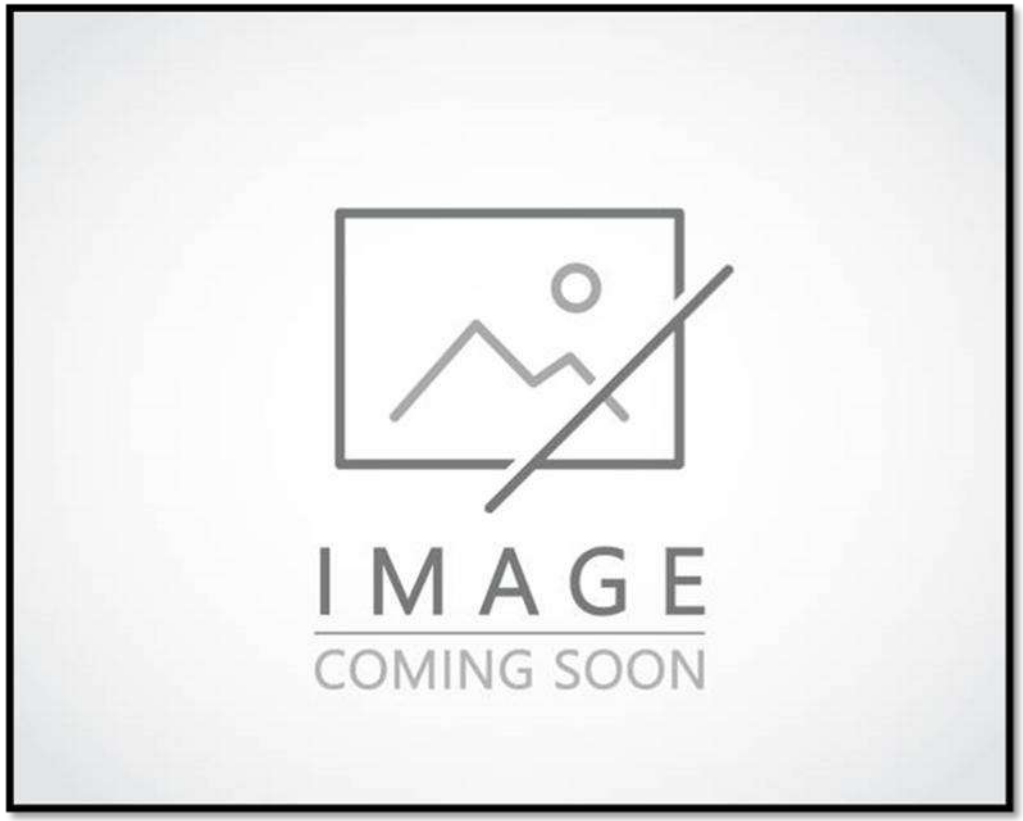

Overall Dimensions:
Core:
Inlet:
Outlet:

ST567

Tel 1.800.774.2168
www.bgrradiator.com

BGR Part Number: ST-0568-4M-NC
ACG6-00022

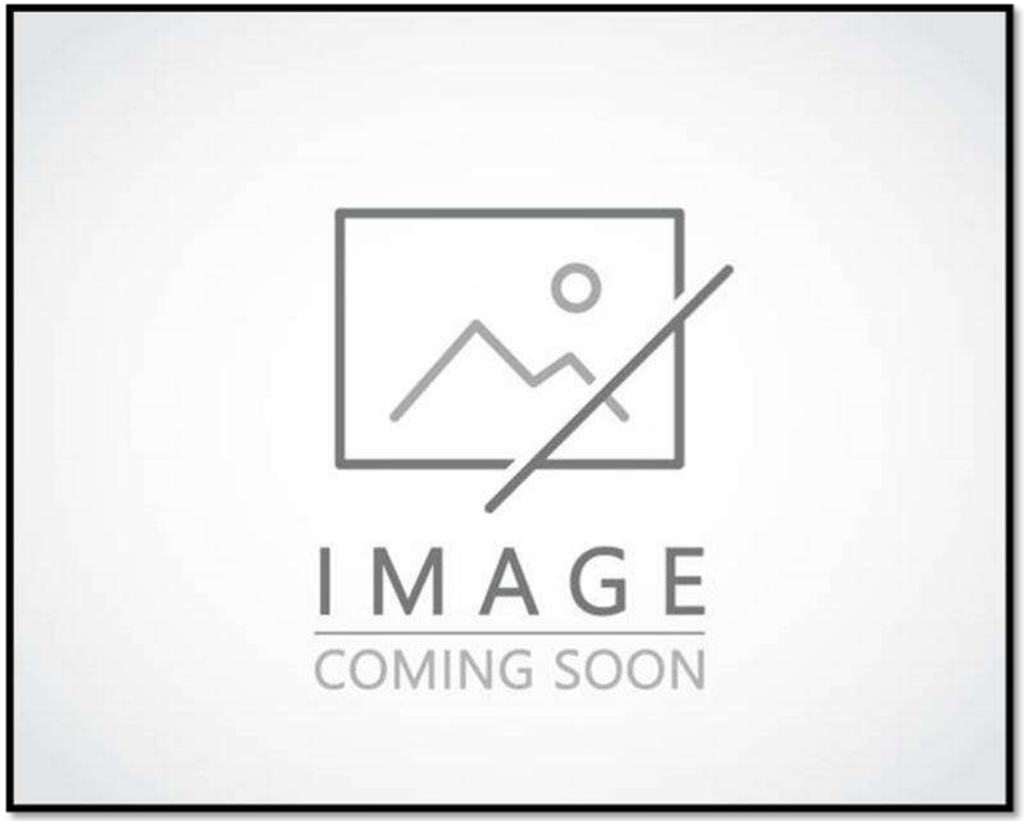

Overall Dimensions:
Core:
Inlet:
Outlet:

ST568

Listed dimensions may vary slightly from OE

BGR Part Number: ST-0569-5M-EF

120-333

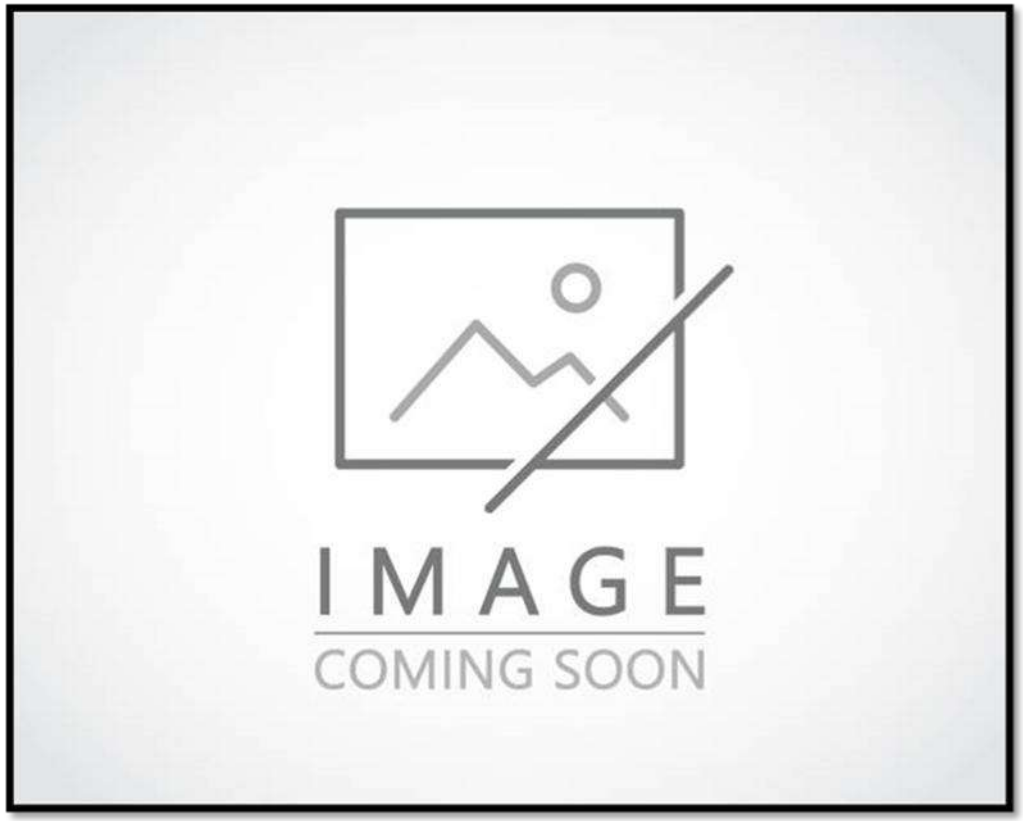

Overall Dimensions:

Core:

Inlet:

Outlet:

ST569

Tel 1.800.774.2168
www.bgrradiator.com

BGR Part Number: ST-0570-6M-NC

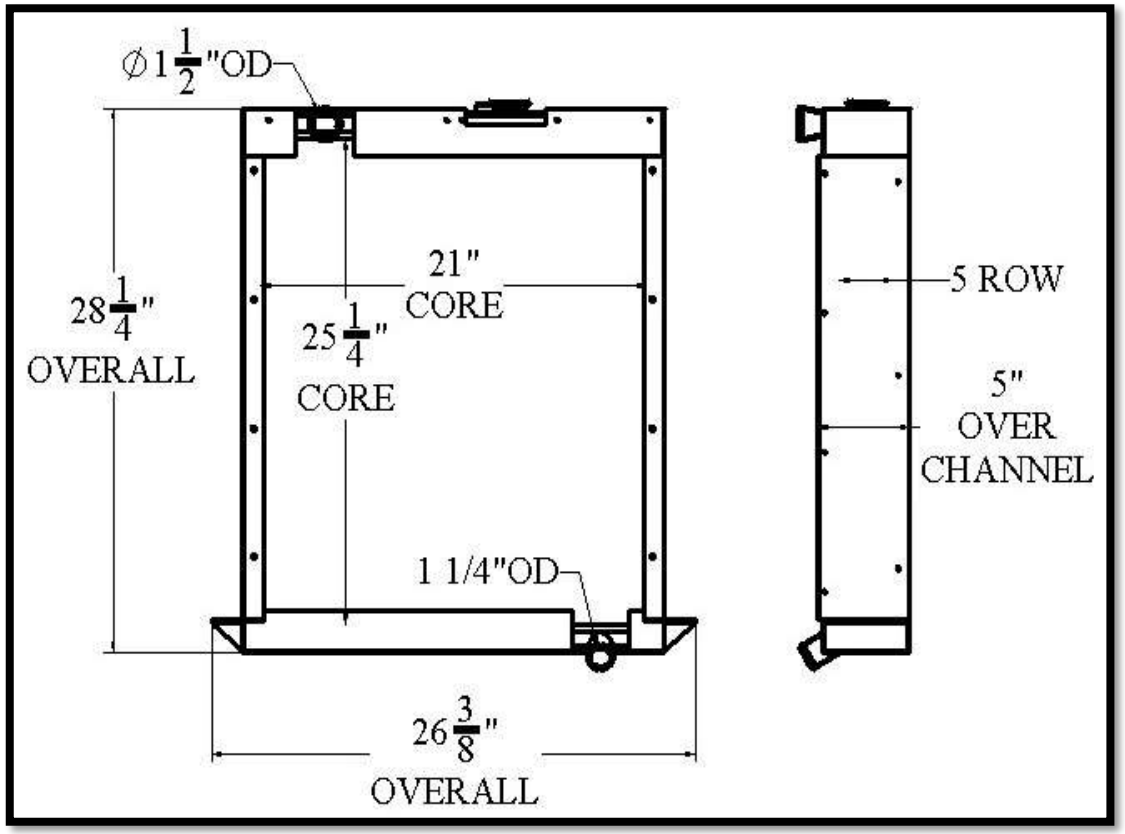

Overall Dimensions: 28-1/4” X 26-3/8” X 5”

Core: 25-1/4” X 21” X 5 ROW

Inlet: 1-1/2”OD

Outlet: 1-1/4”OD

ST570

Listed dimensions may vary slightly from OE

BGR Part Number: ST-0571-3M-NC

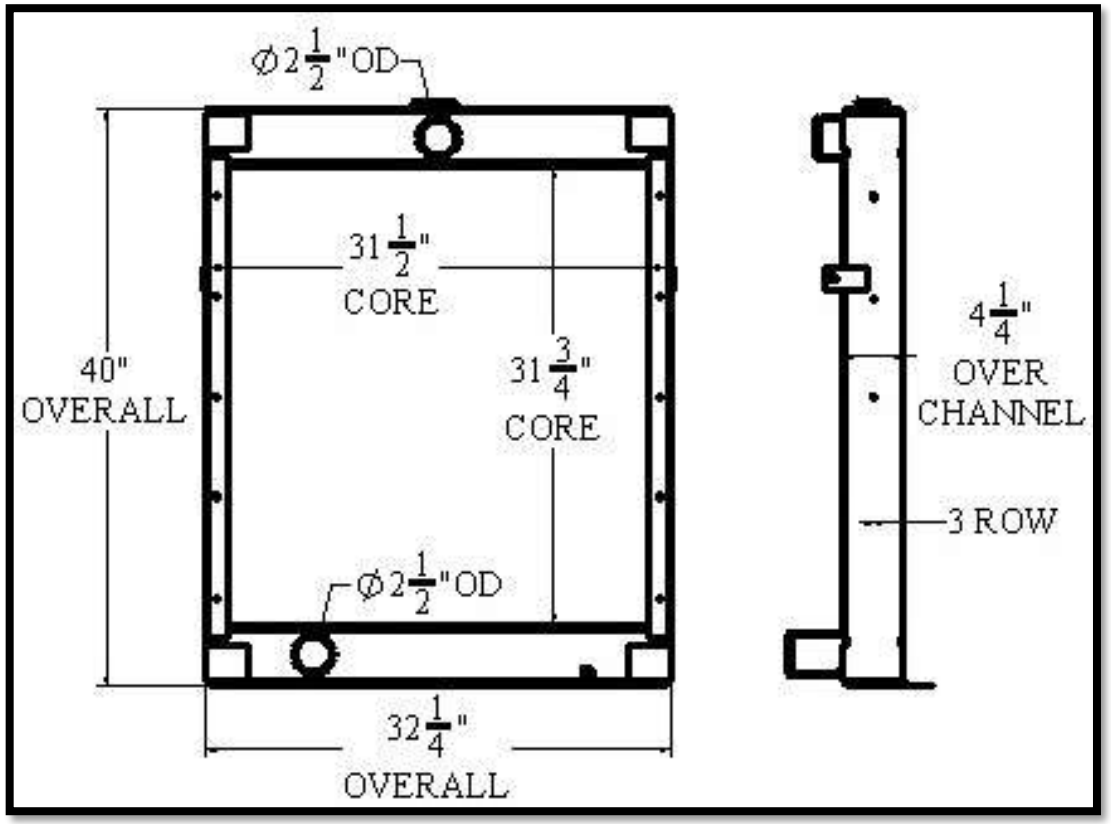

Overall Dimensions: 40” X 32-1/4” X 4-1/4”
Core: 31-3/4” X 31-1/2” X 3 ROW
Inlet: 2-1/2”OD
Outlet: 2-1/2”OD

ST571

Tel 1.800.774.2168
www.bgrradiator.com

BGR Part Number: ST-0572-3M-B

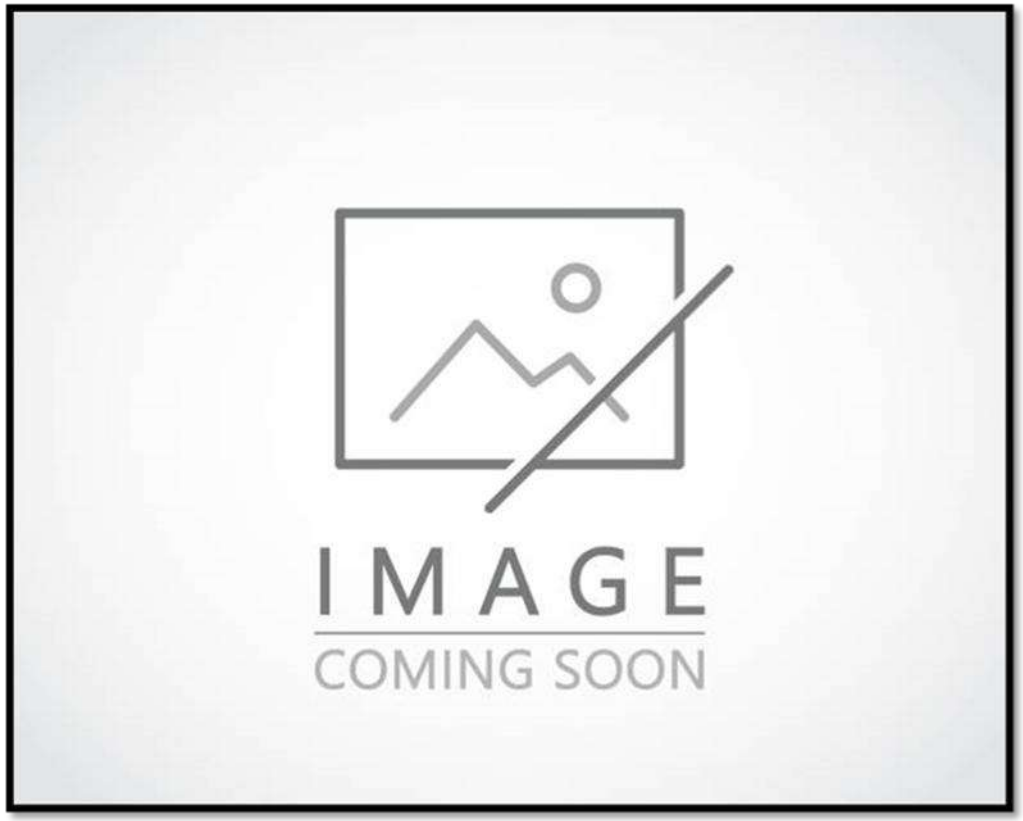

Overall Dimensions:
Core:
Inlet:
Outlet:

ST572

Listed dimensions may vary slightly from OE

BGR Part Number: ST-0573-6M-NC
C01102

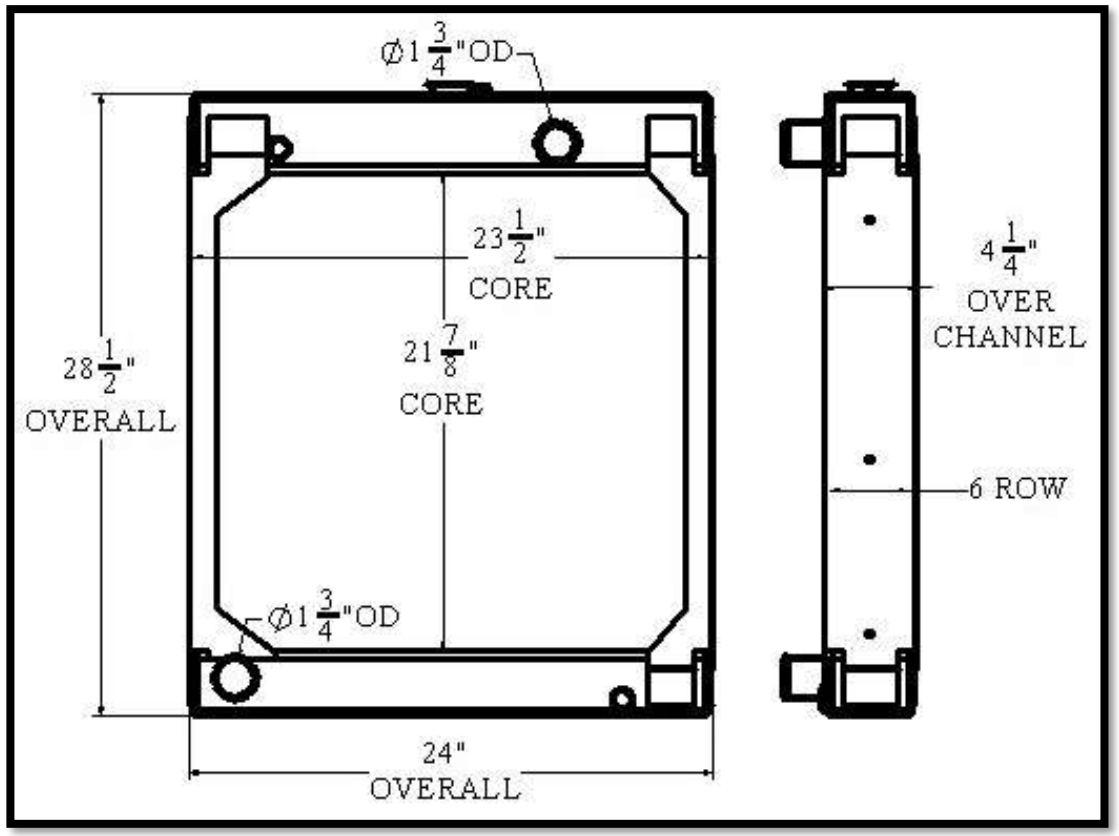

Overall Dimensions: 28-1/2” X 24” X 4-1/4”
Core: 21-7/8” X 23-1/2” X 6 ROW
Inlet: 1-3/4”OD
Outlet: 1-3/4”OD

ST573

Tel 1.800.774.2168
www.bgrradiator.com

BGR Part Number: ST-0574-5M-B

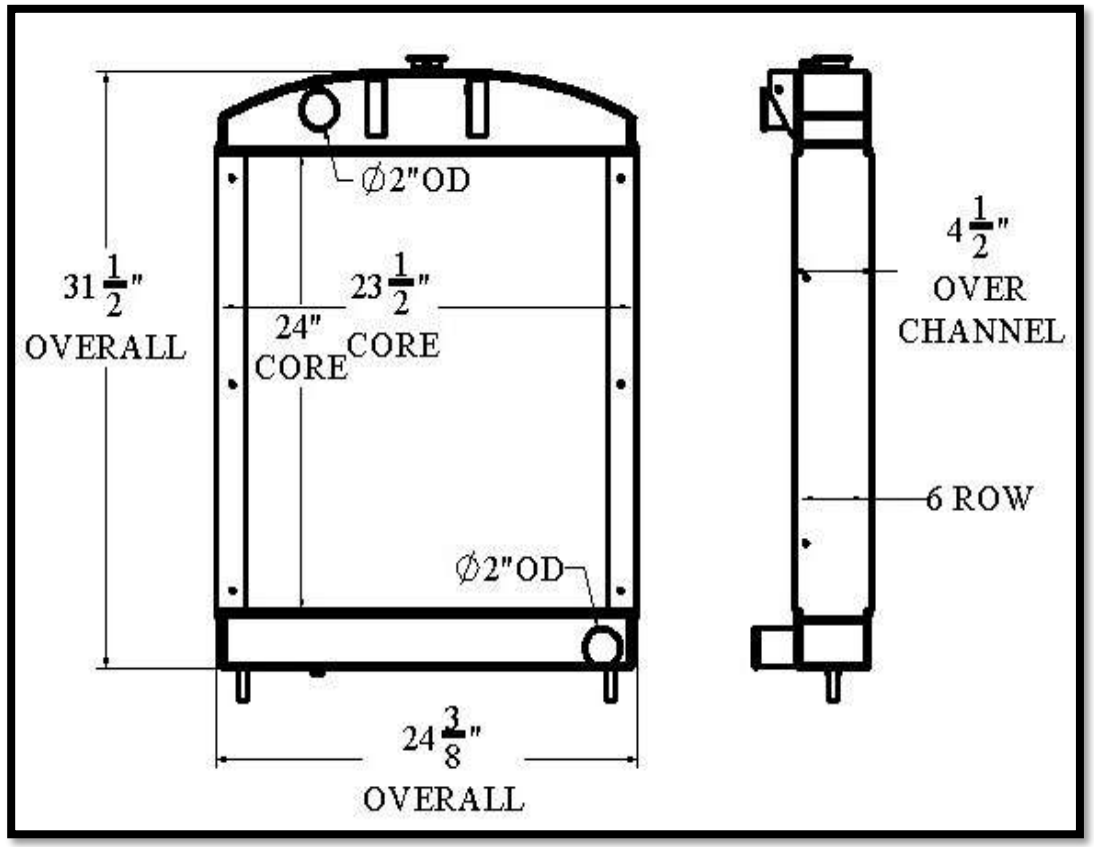

Overall Dimensions: 31-1/2” X 24-3/8” X 4-1/2”
Core: 24” X 23-1/2” X 6 ROW
Inlet: 2”OD
Outlet: 2”OD

ST574

Listed dimensions may vary slightly from OE

BGR Part Number: ST-0575
A040F470, R5698900101

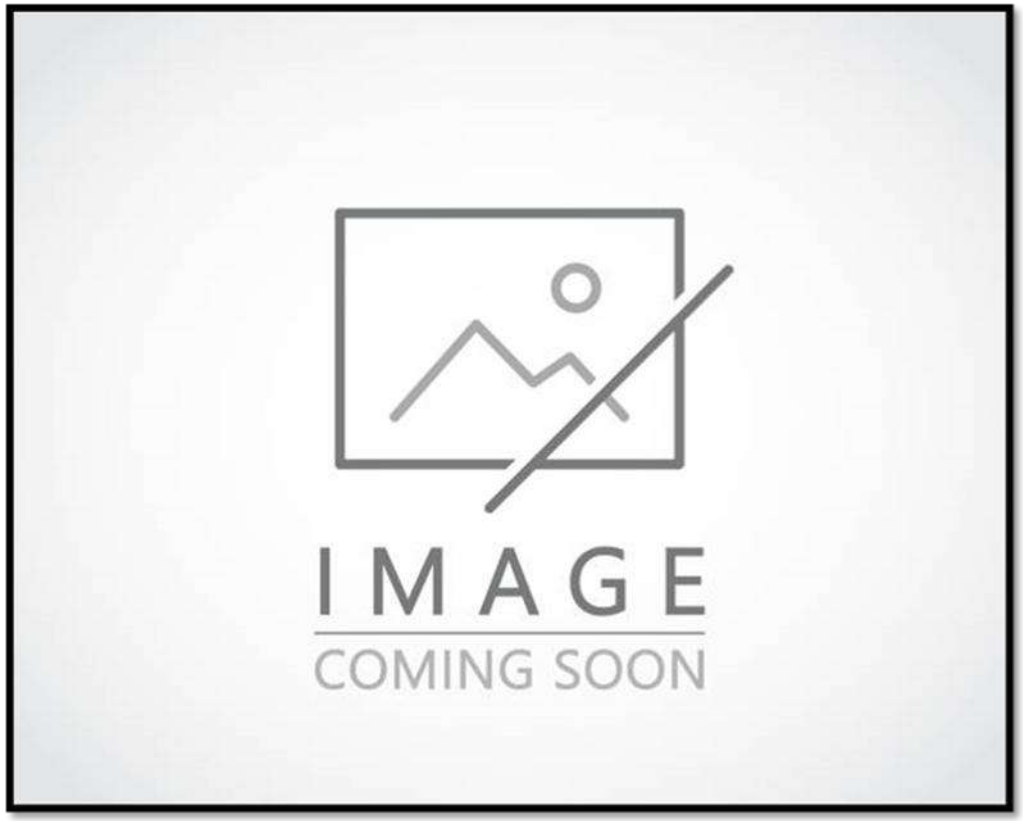

Overall Dimensions:
Core:
Inlet:
Outlet:

Tel 1.800.774.2168
www.bgrradiator.com

BGR Part Number: ST-0576-3M-F
820660

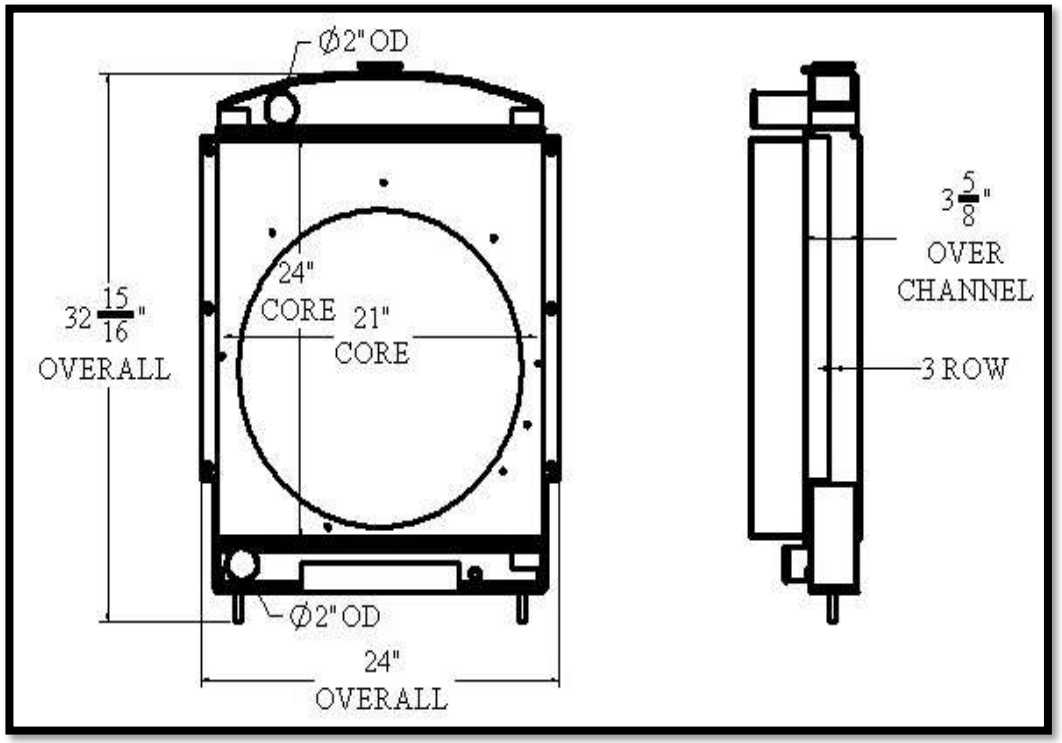

Overall Dimensions: 32-15/16” X 24” X 3-5/8”
Core: 24” X 21” X 3 ROW
Inlet: 2”OD
Outlet: 2”OD

Listed dimensions may vary slightly from OE

BGR Part Number: ST-0577-5M-EF
ENG-11729E00, B5022-07

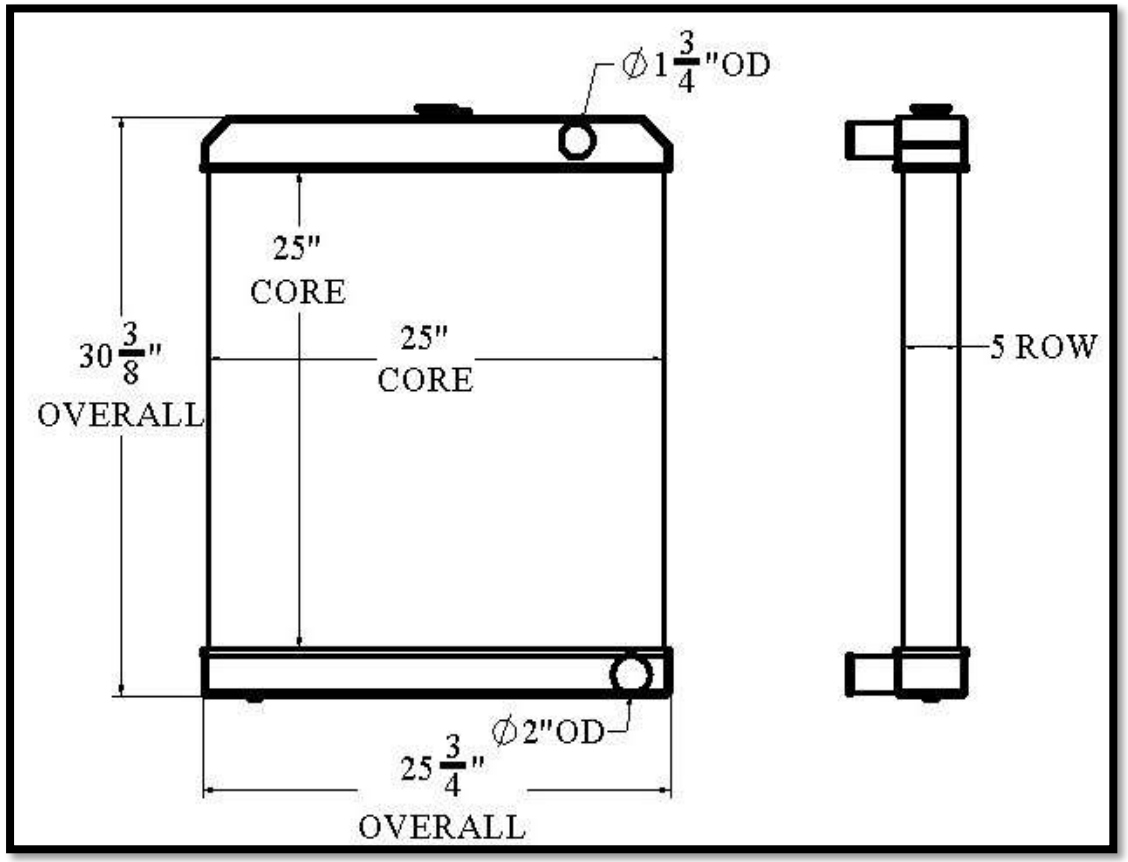

Overall Dimensions: 30-3/8” X 25-3/4”
Core: 25” X 25” X 5 ROW
Inlet: 1-3/4”OD
Outlet: 2”OD

Tel 1.800.774.2168
www.bgrradiator.com
BGR RADIATOR

BGR Part Number: ST-0578-2T-NC
12368D08 PLYMOUTH

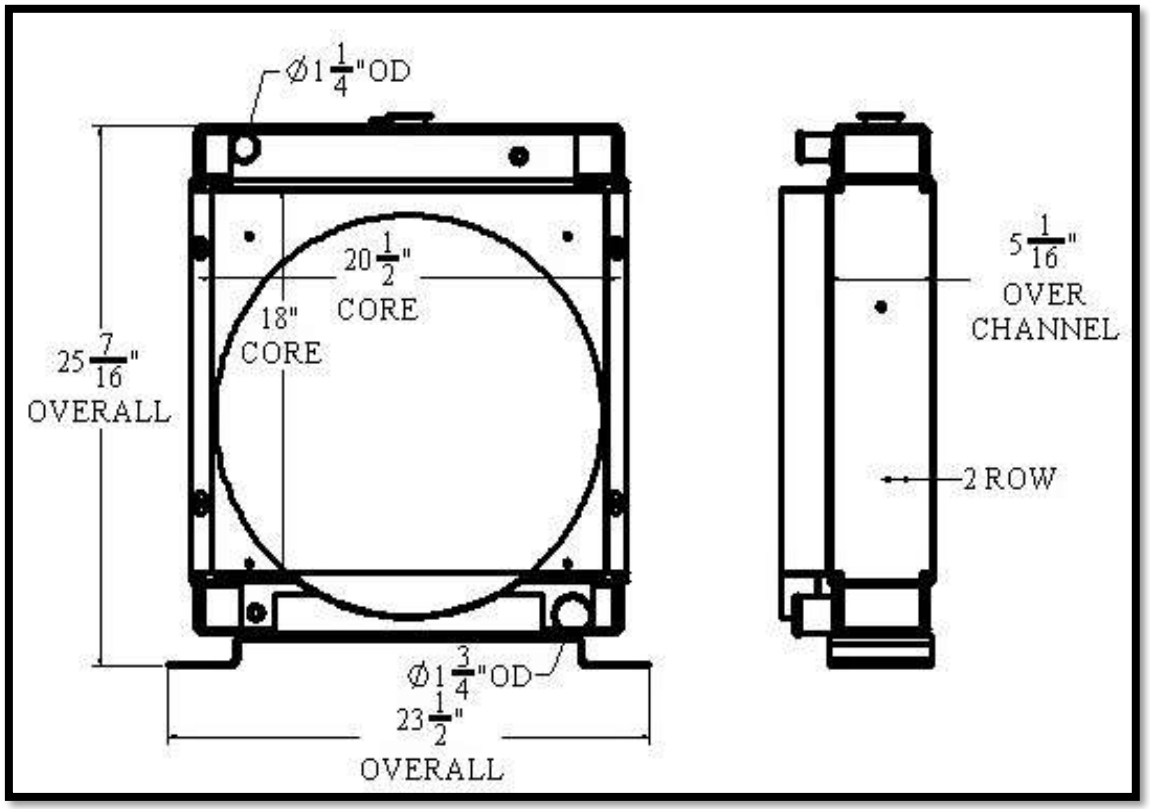

Overall Dimensions: 25-7/16” X 23-1/2” X 5-1/16”
Core: 18” X 20-1/2” X 2 ROW
Inlet: 1-1/4”OD
Outlet: 1-3/4”OD

Listed dimensions may vary slightly from OE

BGR Part Number: ST-0579-5M-F
2488627-2676819, 03-79

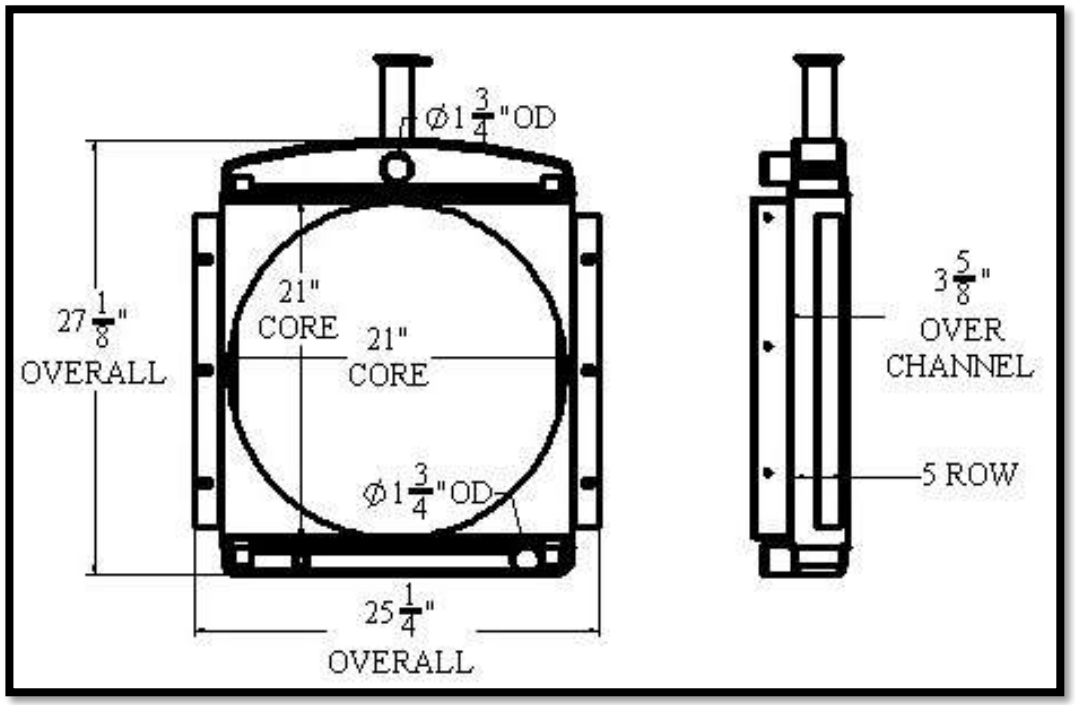

Overall Dimensions: 27-1/8” X 25-1/4” X 3-5/8”
Core: 21” X 21” X 5 ROW
Inlet: 1-3/4”OD
Outlet: 1-3/4”OD

Tel 1.800.774.2168
www.bgrradiator.com

BGR Part Number:ST-0580-3M-NC
RS A 326021

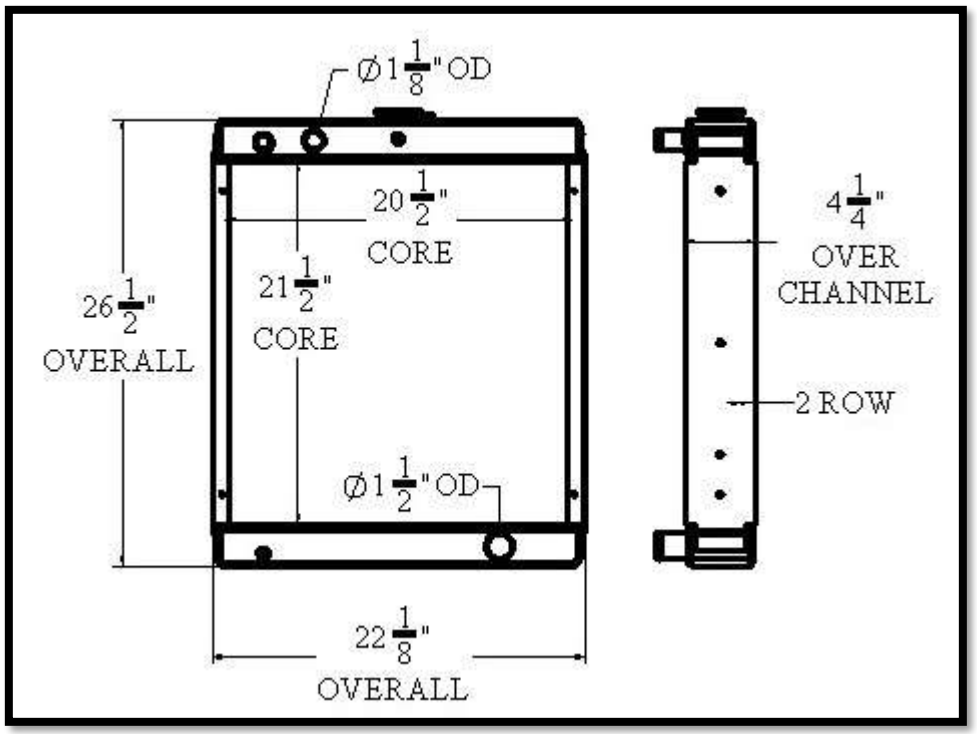

Overall Dimensions: 26-1/2” X 22-1/8” X 4-1/4”
Core: 21-1/2” X 20-1/2” X 2 ROW
Inlet: 1-1/8”OD
Outlet: 1-1/2”OD

ST579

Listed dimensions may vary slightly from OE

ST580

BGR Part Number: ST-0581-6M-NC
RS1823

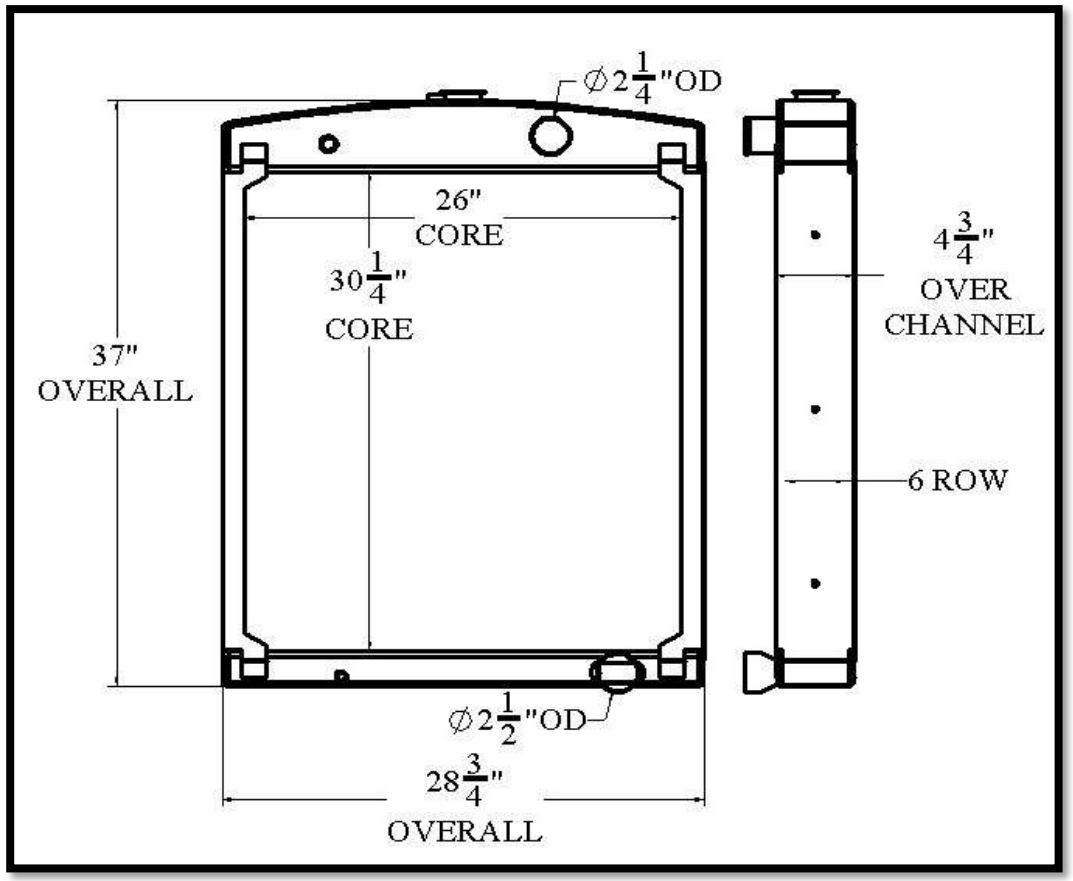

Overall Dimensions: 37” X 28-3/4” X 4-5/8”
Core: 30-1/4” X 26” X 6 ROW
Inlet: 2-1/4”OD
Outlet: 2-1/2”OD

Tel 1.800.774.2168
www.bgrradiator.com

BGR Part Number:ST-0582-5M-B

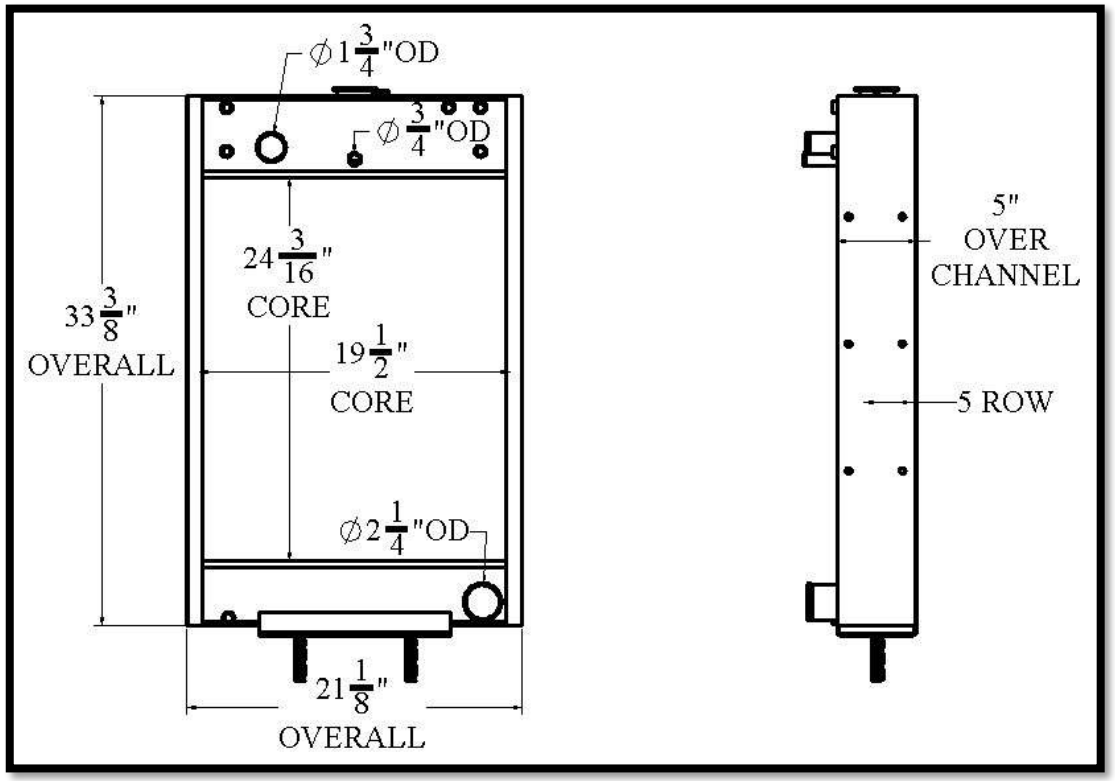

Overall Dimensions: 33-3/8” X 21-1/8” X 5”
Core: 24-3/16” X 19-1/2” X 5 ROW
Inlet: 1-3/4”OD, ¾”OD
Outlet: 2-1/4”OD

ST581

Listed dimensions may vary slightly from OE

ST582

BGR Part Number: ST-0583-5M-NC
D175FJZ4

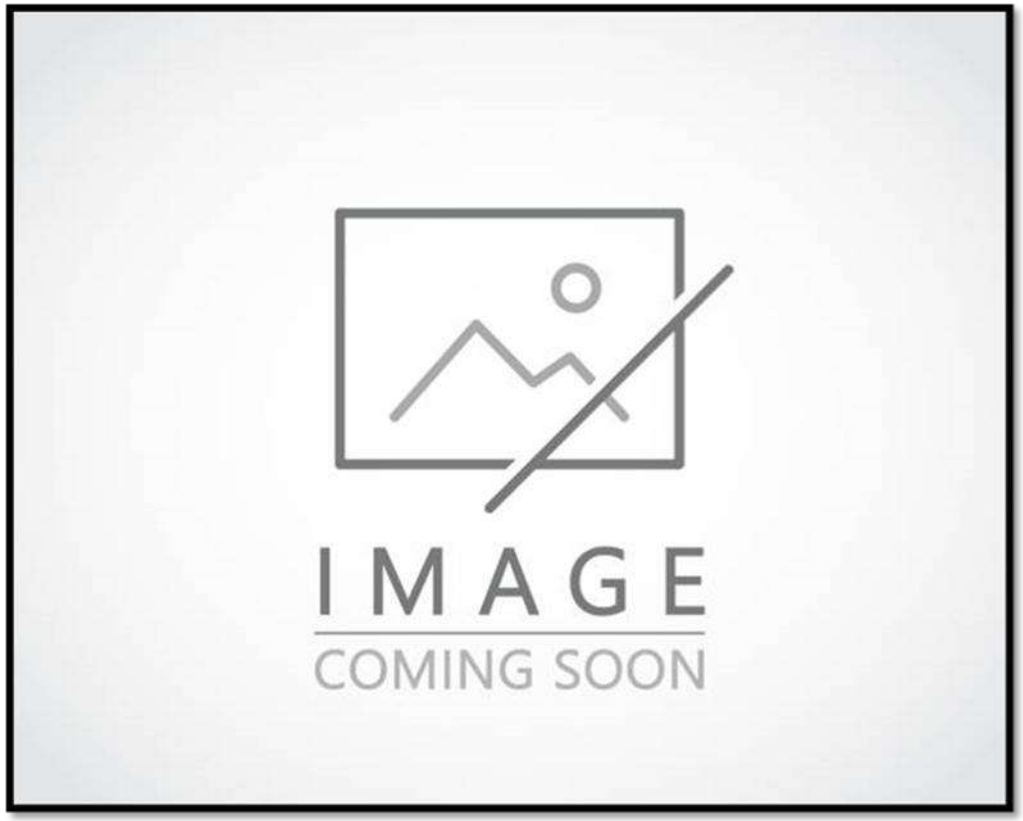

Overall Dimensions:
Core:
Inlet:
Outlet:

Tel 1.800.774.2168
www.bgrradiator.com

BGR Part Number:ST-0584-3M-B
5619509, MN422112-0584, 258-0271, 607-4843

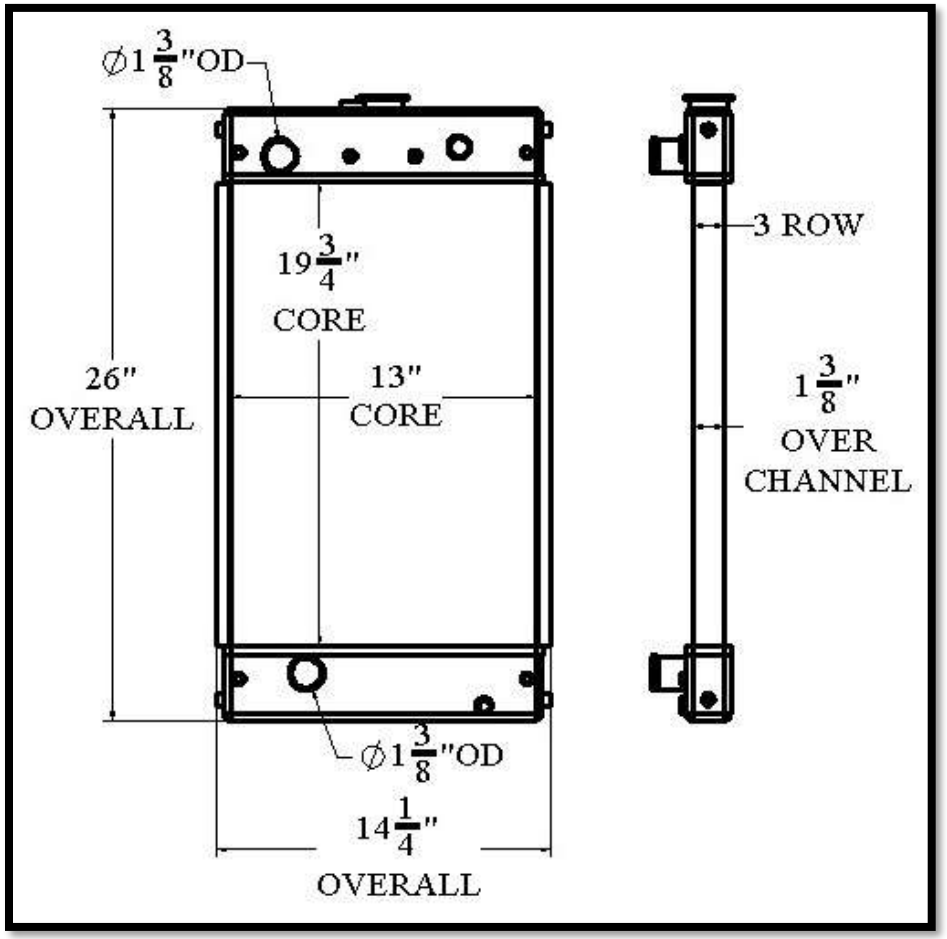

Overall Dimensions: 26” X 14-1/4” X 1-3/8”
Core: 19-3/4” X 13-1/2” X 3 ROW
Inlet: 1-3/8”OD
Outlet: 1-3/8”OD

Listed dimensions may vary slightly from OE

BGR Part Number: ST-0585-5M-NC

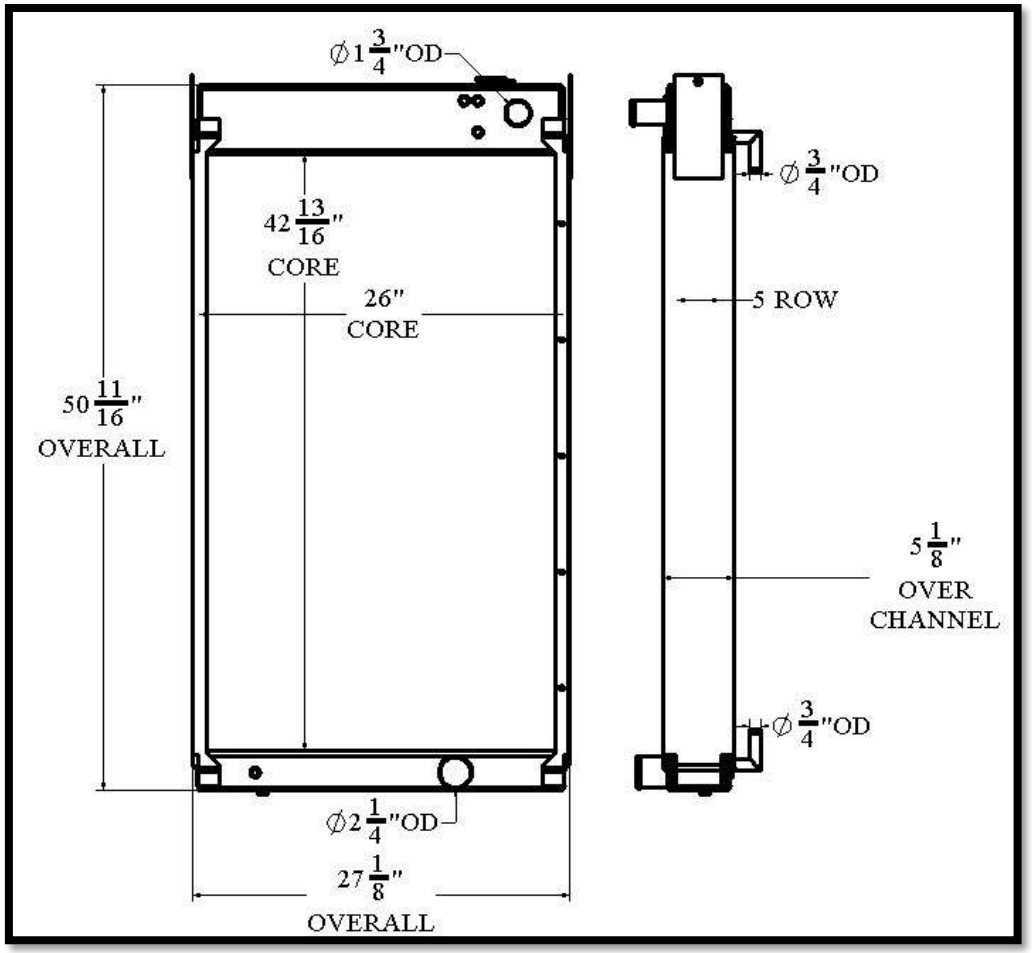

Overall Dimensions: 50-11/16” X 27-1/8” X 5-1/8”
Core: 42-13/16” X 26” X 5 ROW
Inlet: 1-3/4”OD, ¾”OD
Outlet: 2-1/4”OD, ¾”OD

Tel 1.800.774.2168
www.bgrradiator.com

BGR Part Number:ST-0586-2M-NC
M4923200014, MQPM4923200014

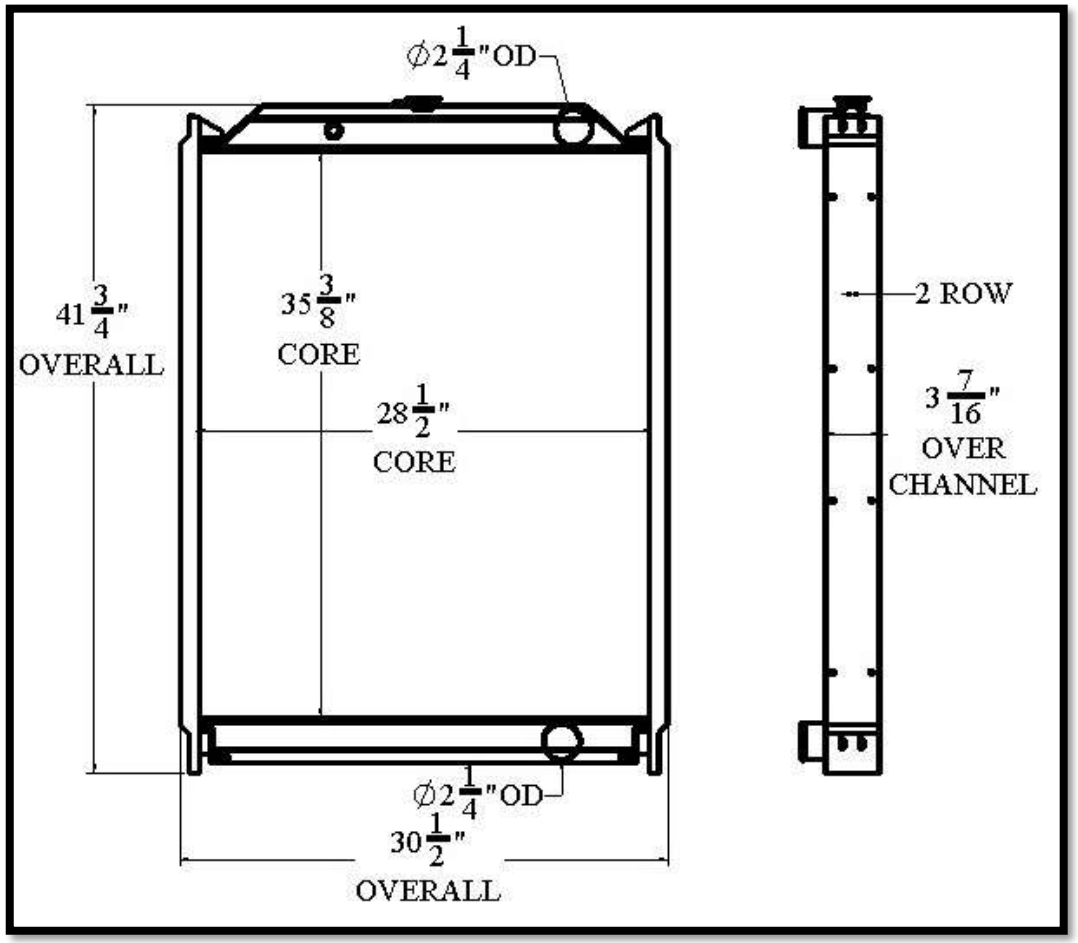

Overall Dimensions:41-3/4” X 30-1/2” X 3-7/16”
Core: 35-3/8” X 28-1/2” X 2 ROW
Inlet: 2-1/4”OD
Outlet: 2-1/4”OD

ST585

Listed dimensions may vary slightly from OE

ST586

BGR Part Number: ST-0587

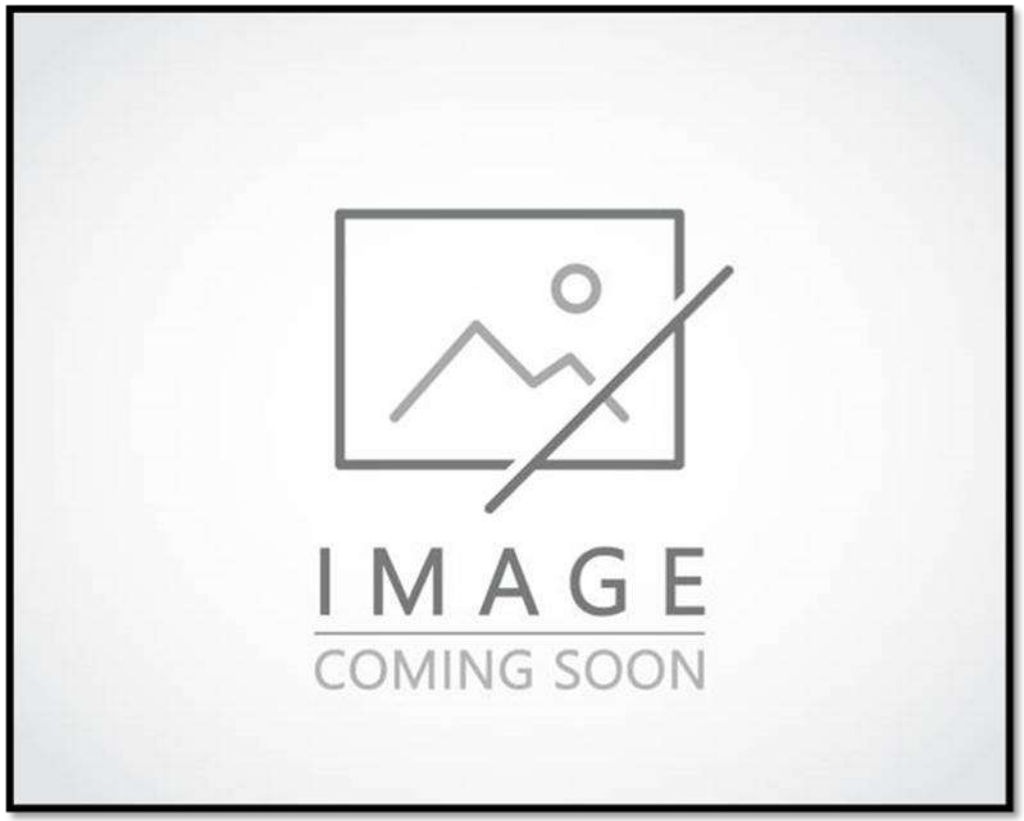

Overall Dimensions:
Core:
Inlet:
Outlet:

ST587

Tel 1.800.774.2168
www.bgrradiator.com

BGR RADIATOR

BGR Part Number:ST-0588-2M-NC
232000-639 SANKYO RADIATOR

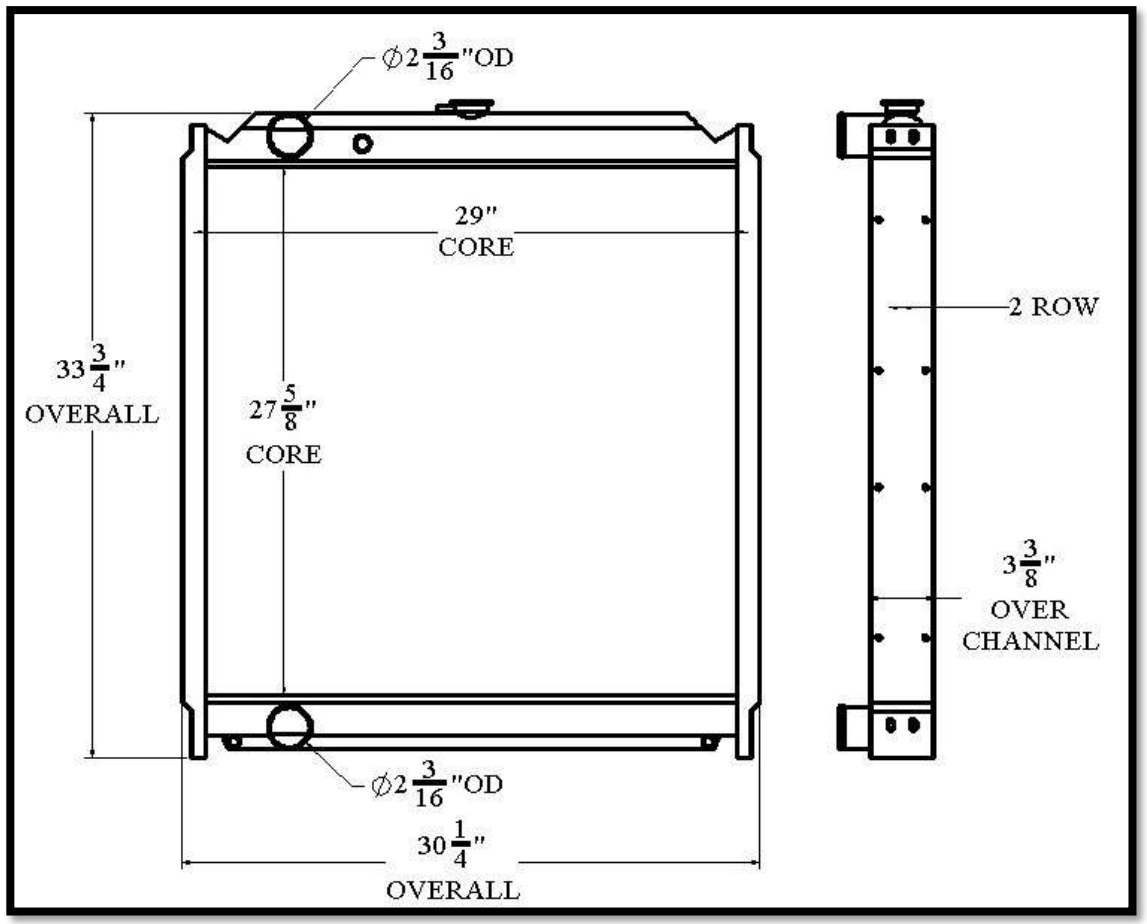

Overall Dimensions:33-3/4” X 30-1/4” X 3-3/8”
Core:27-5/8” X 29” X 2 ROW
Inlet:2-3/16”OD
Outlet:2-3/16”OD

Listed dimensions may vary slightly from OE

ST588

BGR Part Number: ST-0589-4M-NC

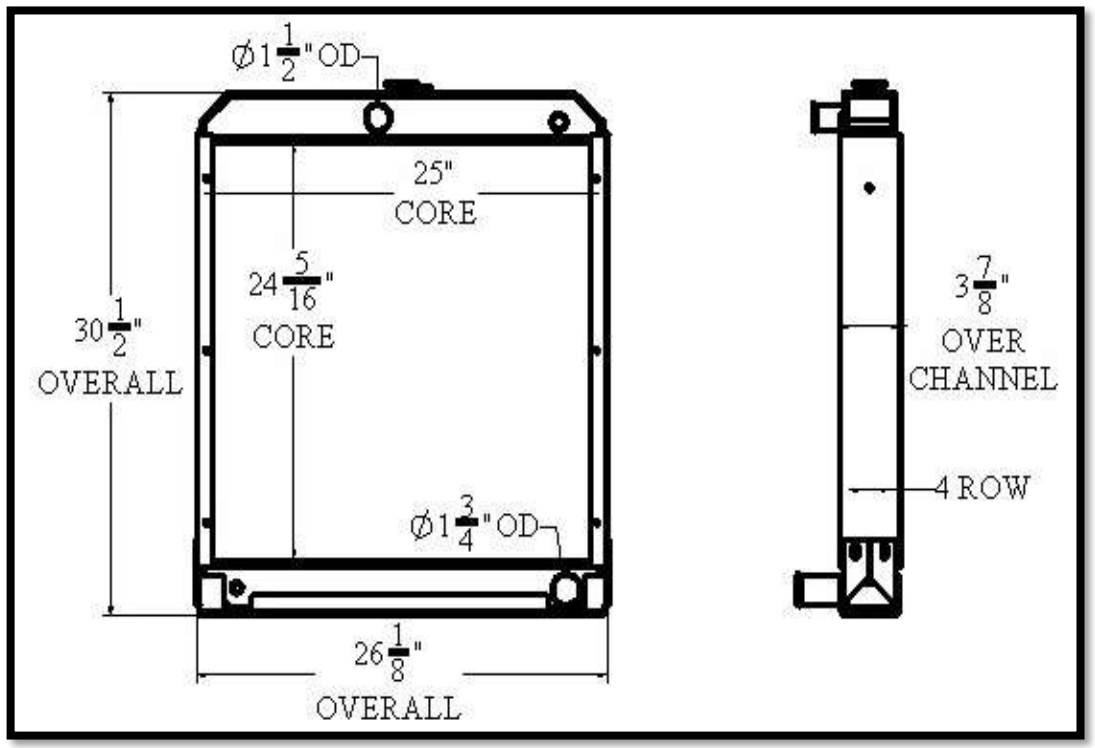

Overall Dimensions: 30-1/2” X 26-1/8” X 3-7/8”
Core: 24-5/16” X 25” X 4 ROW
Inlet: 1-1/2”OD
Outlet: 1-3/4”OD

ST589

Tel 1.800.774.2168
www.bgrradiator.com
BGR RADIATOR

BGR Part Number:ST-0590-7I-NC

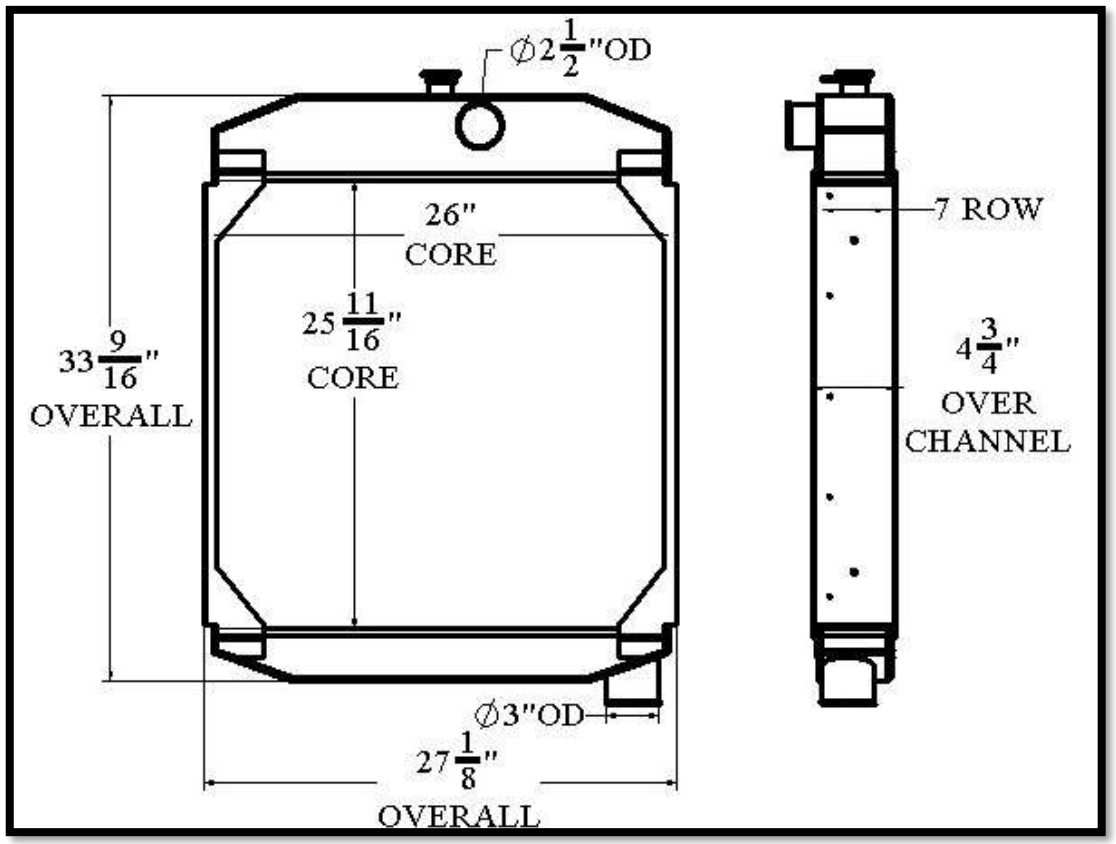

Overall Dimensions: 33-9/16” X 27-1/8” X 4-3/4”
Core: 25-11/16” X 26” X 7 ROW
Inlet:2-1/2”OD
Outlet:3”OD

ST590

Listed dimensions may vary slightly from OE

BGR Part Number: ST-0591-5M-F

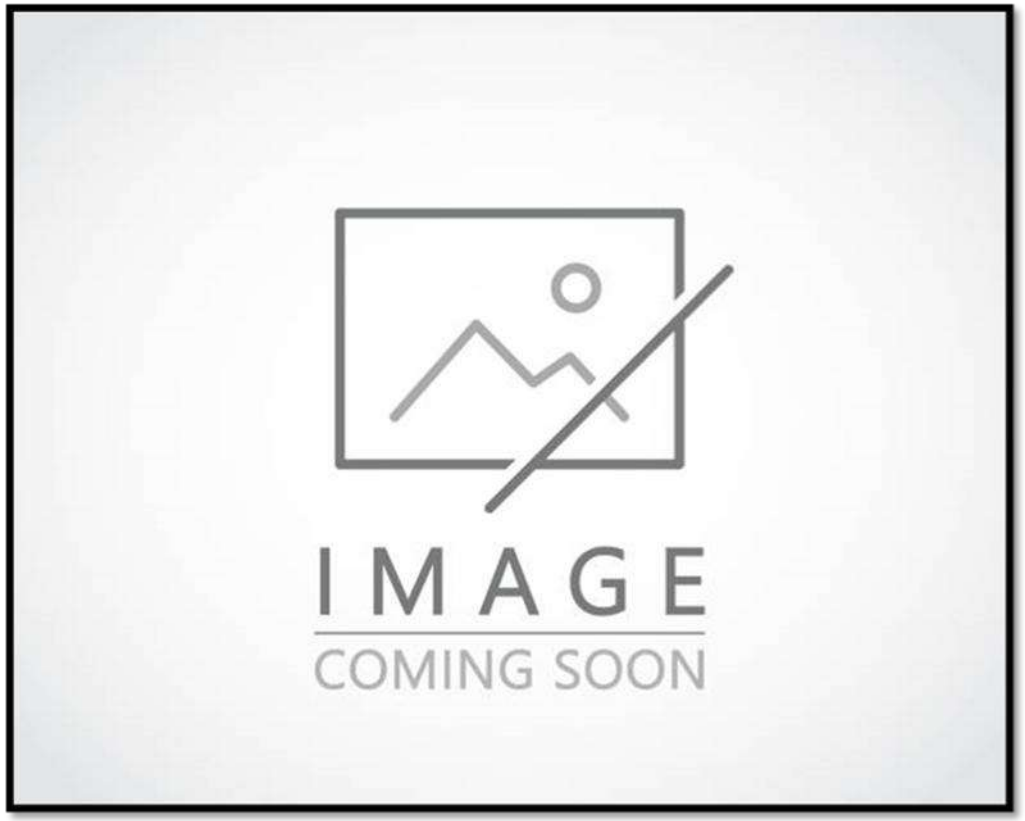

Overall Dimensions:
Core:
Inlet:
Outlet:

ST591

Tel 1.800.774.2168
www.bgrradiator.com

BGR Part Number:ST-0592-4M-NC
79000371 REV 11

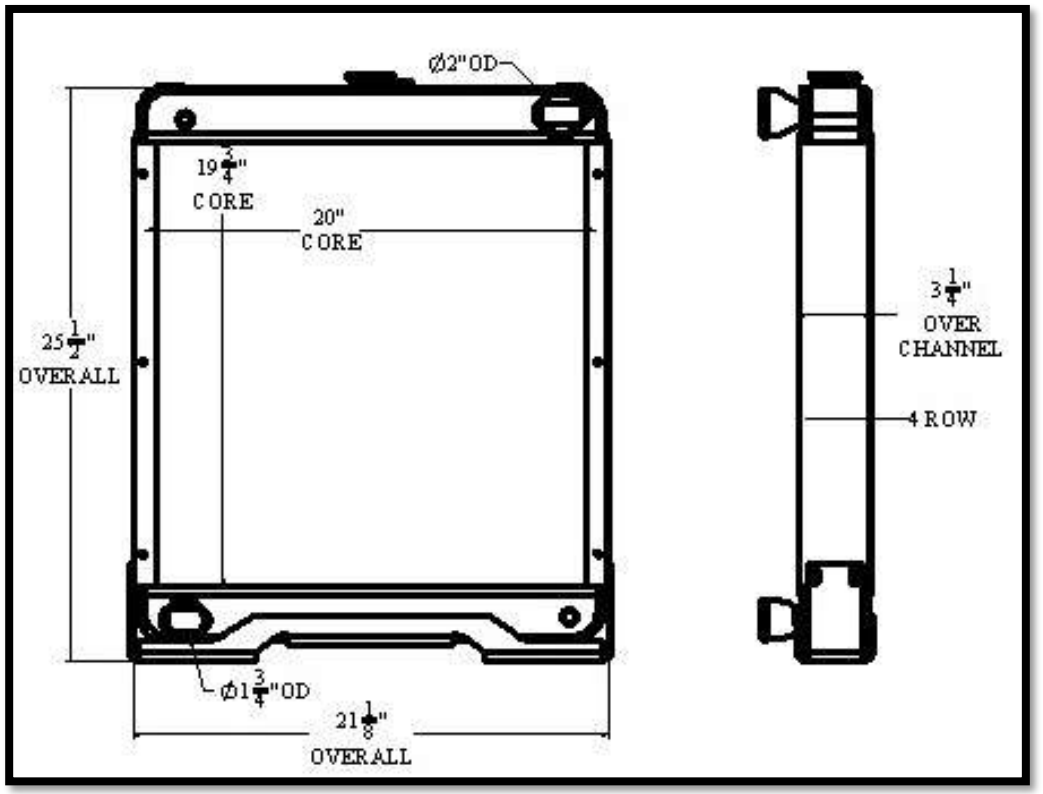

Overall Dimensions: 25-1/2” X 21-1/8” X 3-1/4”
Core: 20” X 20” X 4 ROW
Inlet:2”OD
Outlet: 1-3/4”OD

ST592

Listed dimensions may vary slightly from OE

BGR Part Number: ST-0593

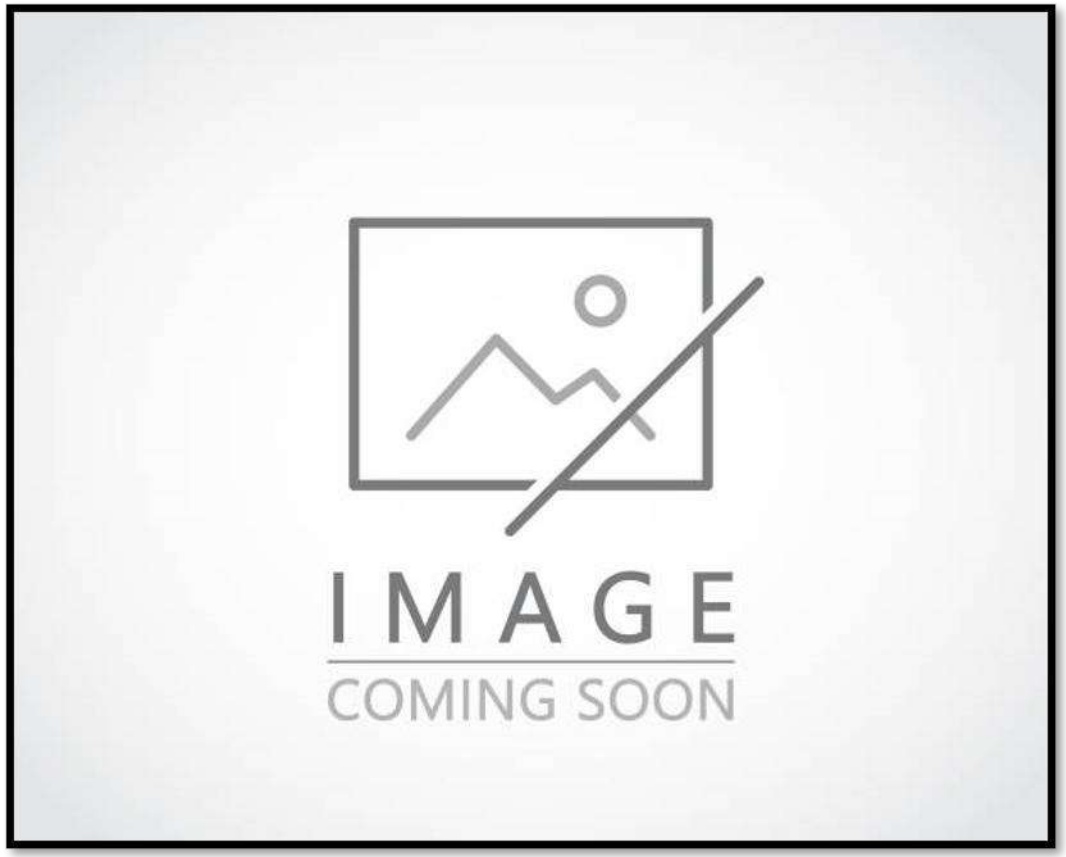

Overall Dimensions:
Core:
Inlet:
Outlet:

Tel 1.800.774.2168
www.bgrradiator.com

BGR Part Number: ST-0594-4M-F

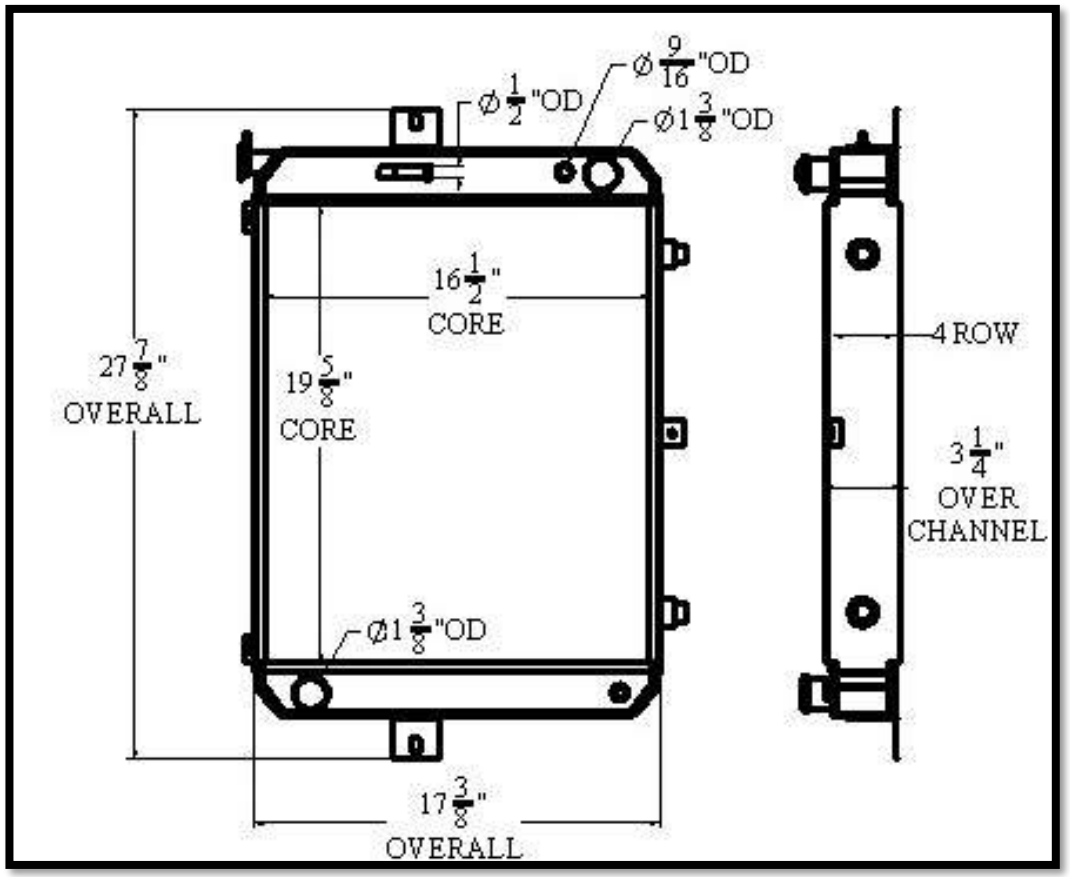

Overall Dimensions: 27-7/8” X 17-3/8” X 3-1/4”
Core: 19-5/8” X 16-1/2” X 4 ROW
Inlet: 1-3/8”OD, 9/16”OD, ½”OD
Outlet: 1-3/8”OD

Listed dimensions may vary slightly from OE

BGR Part Number: ST-0595-4M-NC
RR318336

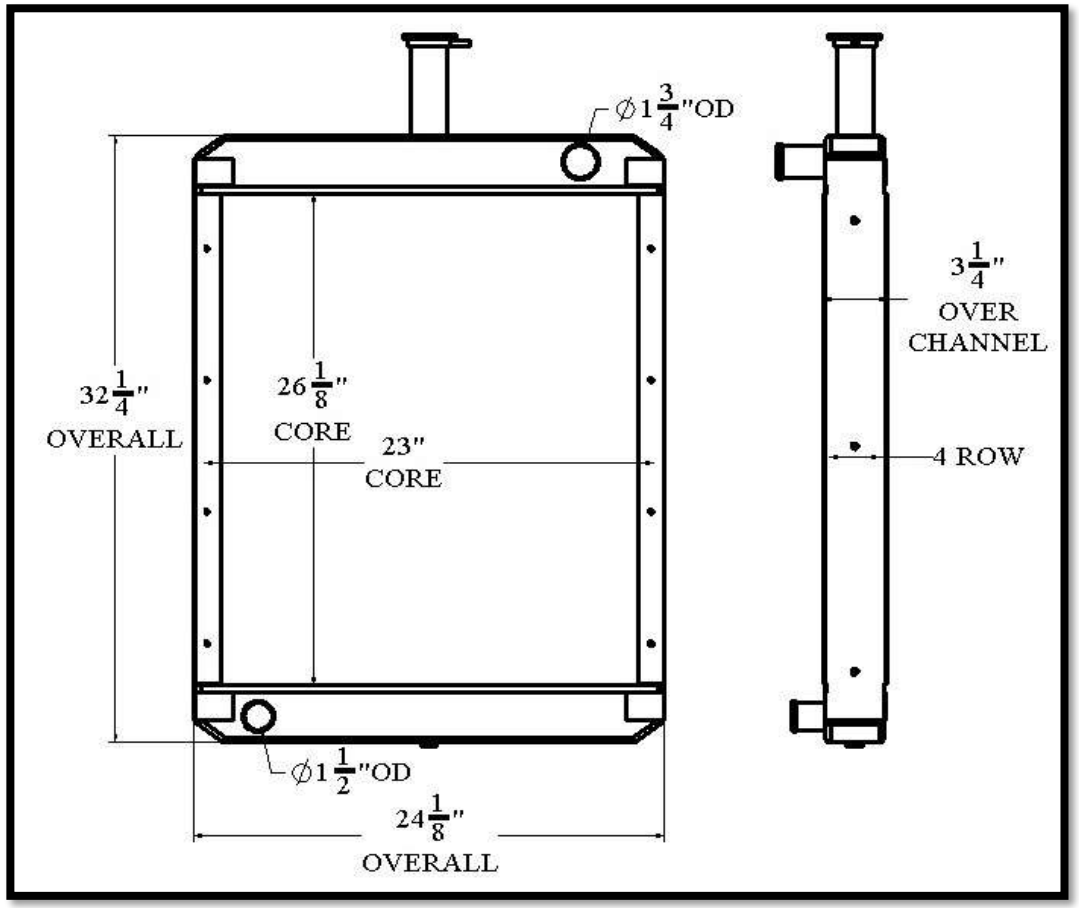

Overall Dimensions: 32-1/4” X 24-1/8” X 3-1/4”
Core: 26-1/8” X 23” X 4 ROW
Inlet: 1-3/4”OD
Outlet: 1-1/2”OD

Tel 1.800.774.2168
www.bgrradiator.com

BGR Part Number: ST-0596-3M-NC

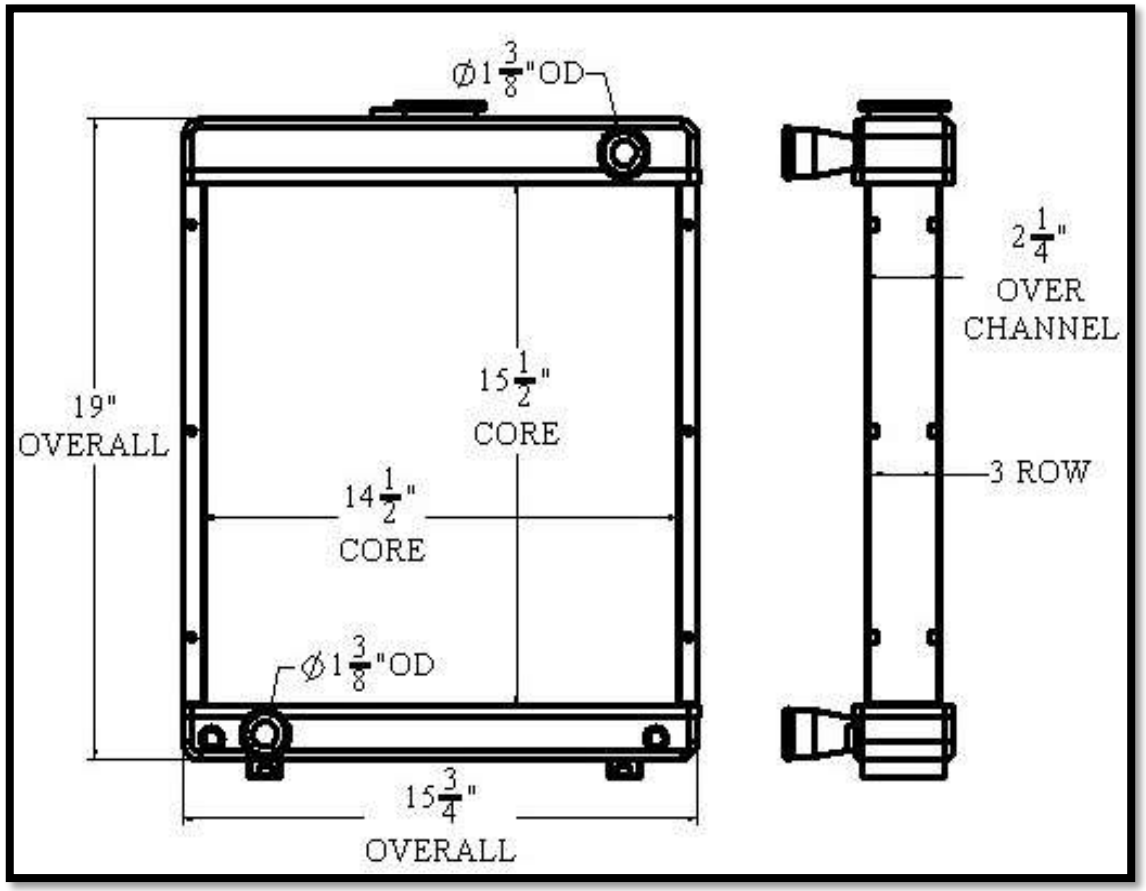

Overall Dimensions: 19” X 15-3/4” X 2-1/4”
Core: 15-1/2” X 14-1/2” X 3 ROW
Inlet: 1-3/8”OD
Outlet: 1-3/8”OD

ST595

Listed dimensions may vary slightly from OE

ST596

BGR Part Number: ST-0597-2M-EF

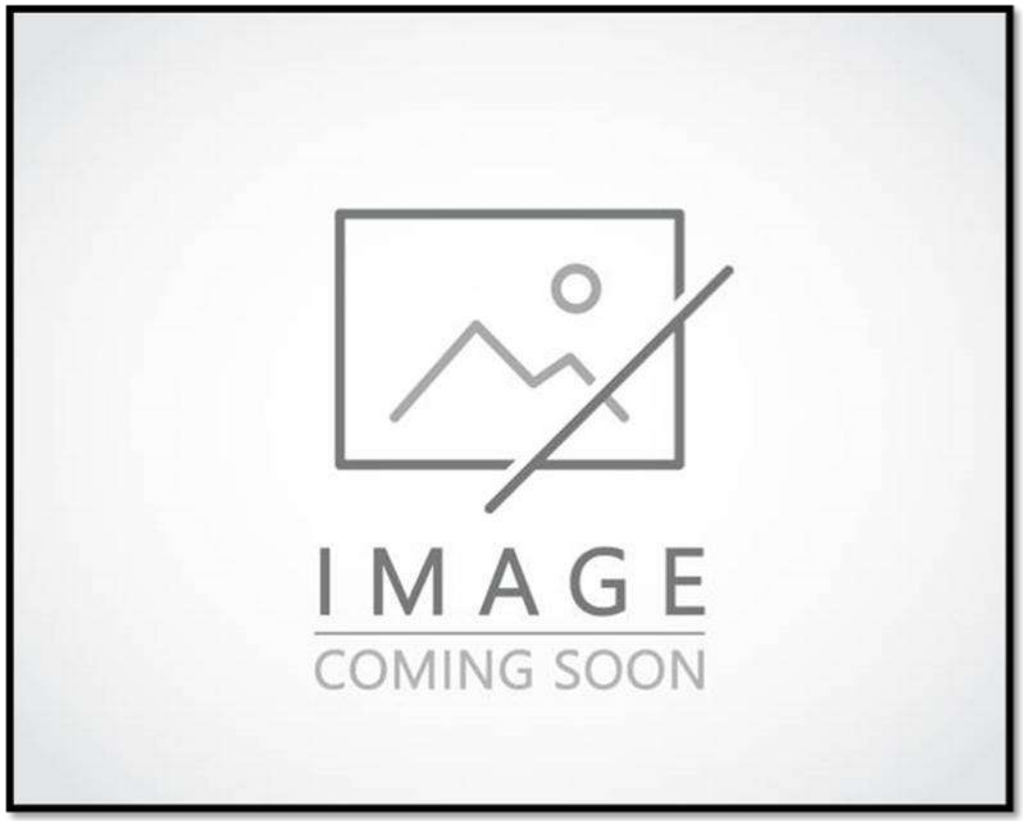

Overall Dimensions:
Core:
Inlet:
Outlet:

ST597

Tel 1.800.774.2168
www.bgrradiator.com

BGR Part Number: ST-0598-3M-EF
130-3415

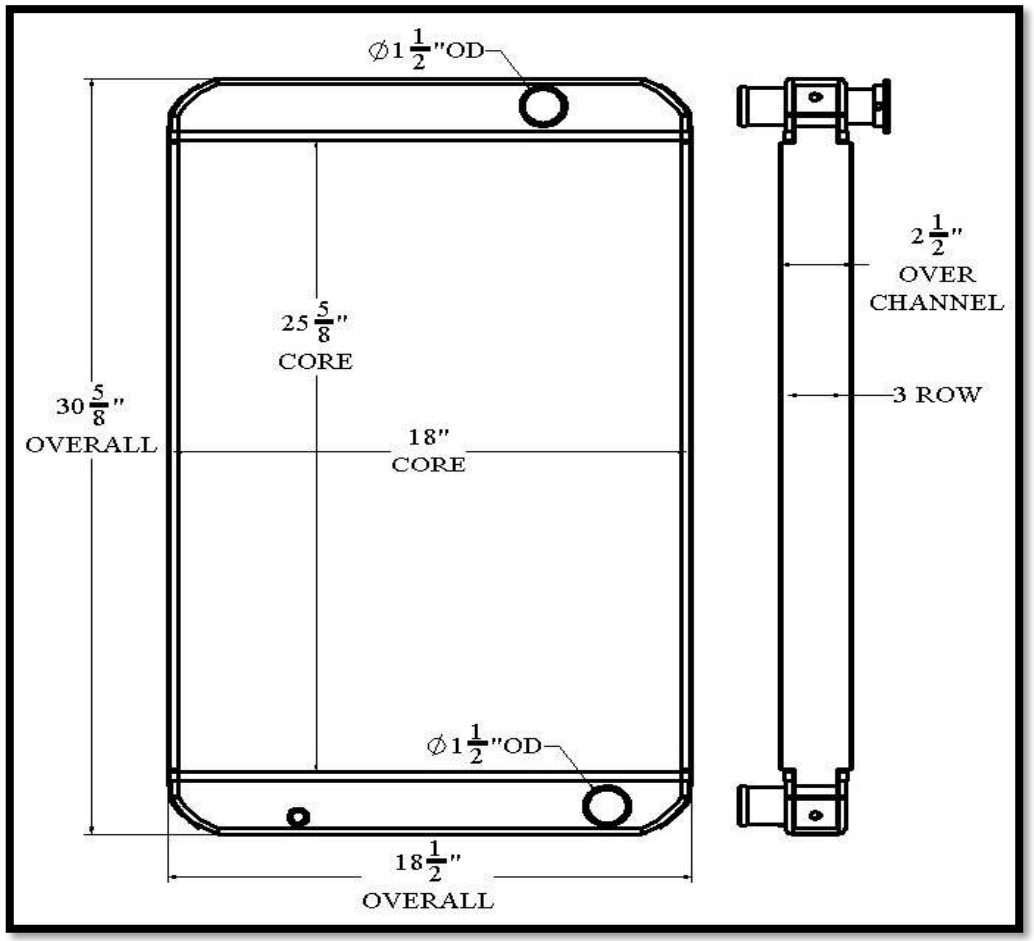

Overall Dimensions: 30-5/8” X 18-1/2” X 2-1/2”
Core: 25-5/8” X 18” X 3 ROW
Inlet: 1-1/2”OD
Outlet: 1-1/2”OD

ST598

Listed dimensions may vary slightly from OE

BGR Part Number: ST-0599-4M-EF

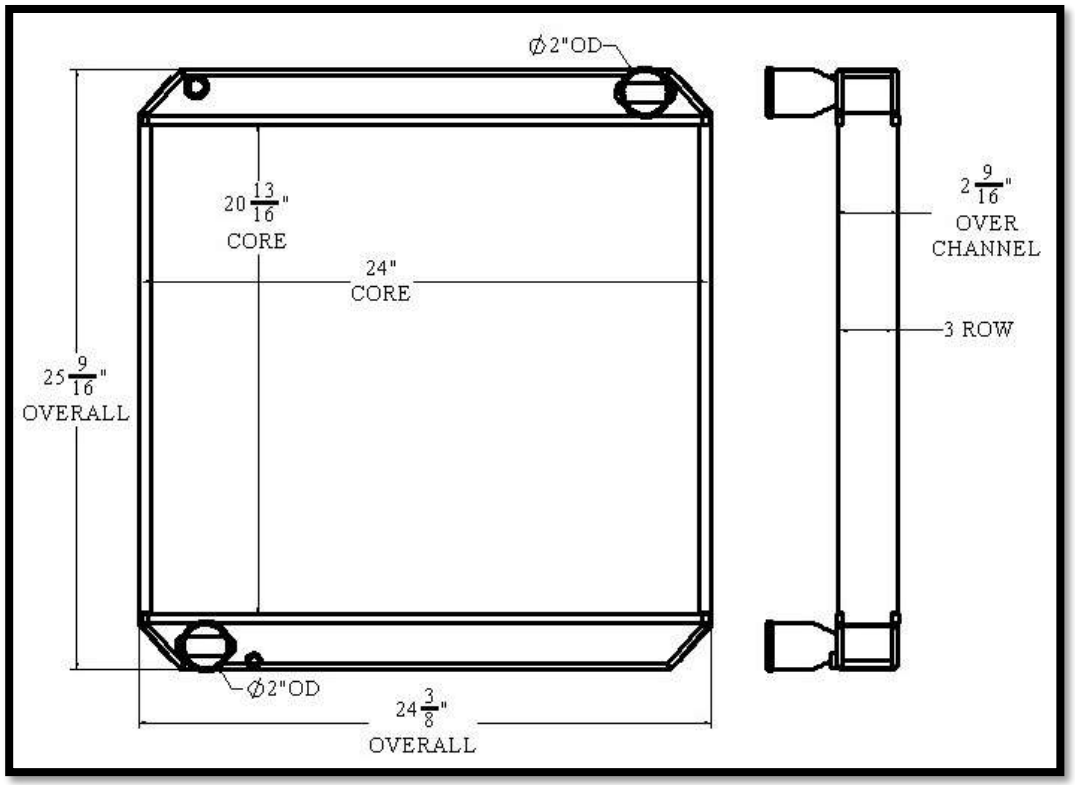

Overall Dimensions: 25-9/16” X 24-3/8” X 2-9/16”
Core: 20-13/16” X 24” X 3 ROW
Inlet: 2”OD
Outlet:2”OD

Tel 1.800.774.2168
www.bgrradiator.com

BGR Part Number: ST-0600-8M-EF

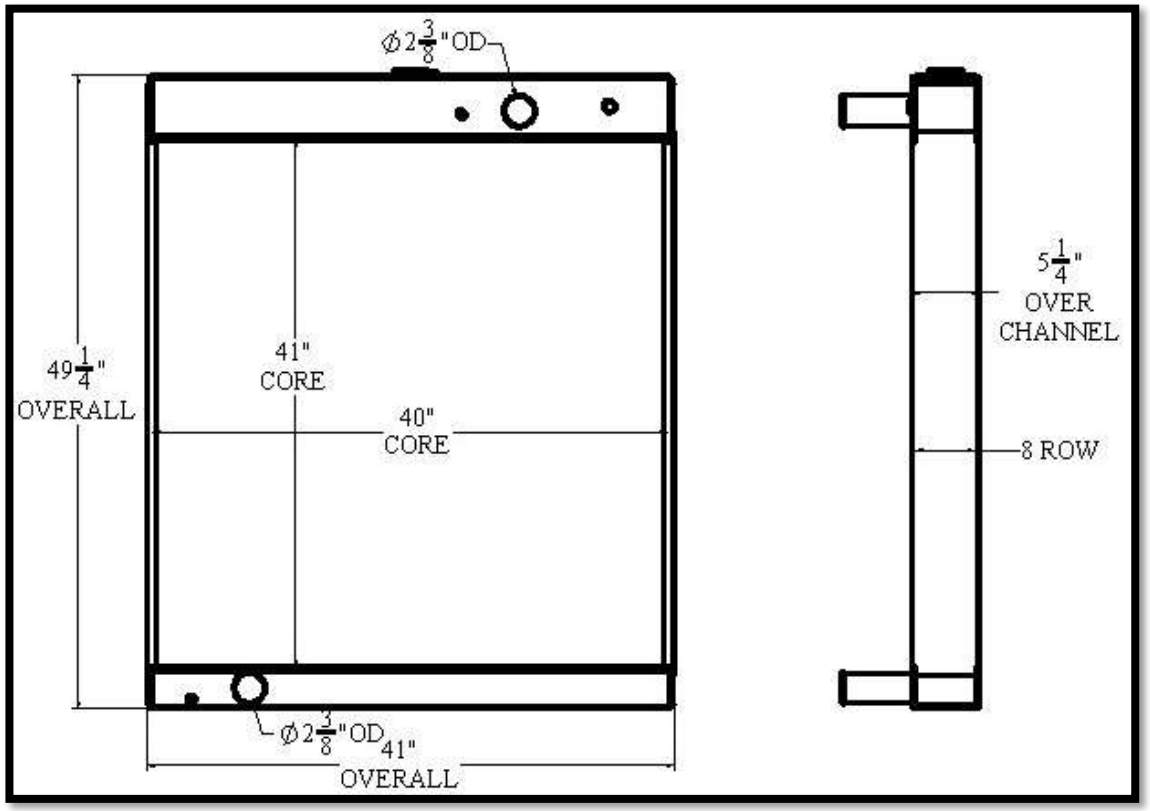

Overall Dimensions: 49-1/4” X 41” X 5-1/4”
Core: 41” X 40” X 8 ROW
Inlet: 2-3/8”OD
Outlet: 2-3/8”OD

ST599

Listed dimensions may vary slightly from OE

ST600

BGR Part Number: ST-0601-5M-NC

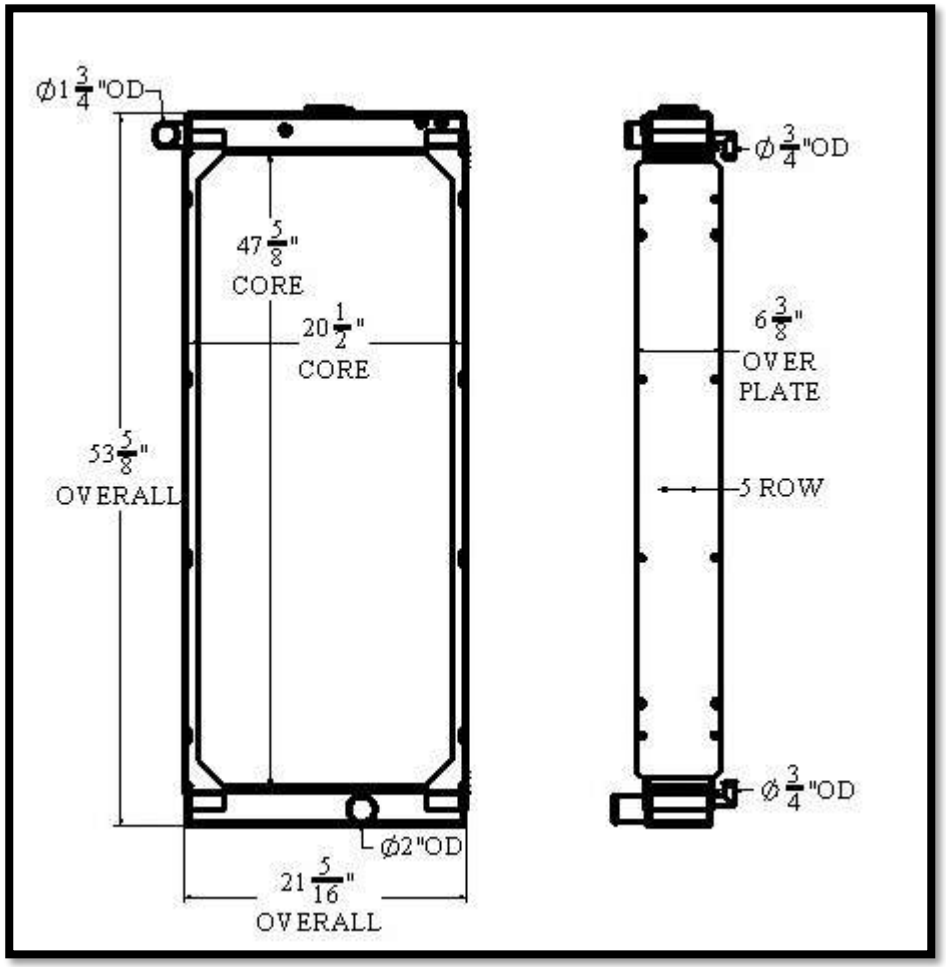

Overall Dimensions: 53-5/8” X 21-5/16” X 6-3/8”
Core: 47-5/8” X 20-1/2” X 5 ROW
Inlet: 1-3/4”OD, ¾”OD
Outlet: 2”OD, ¾” OD

Tel 1.800.774.2168
www.bgrradiator.com

BGR Part Number: ST-0602-8M-NC

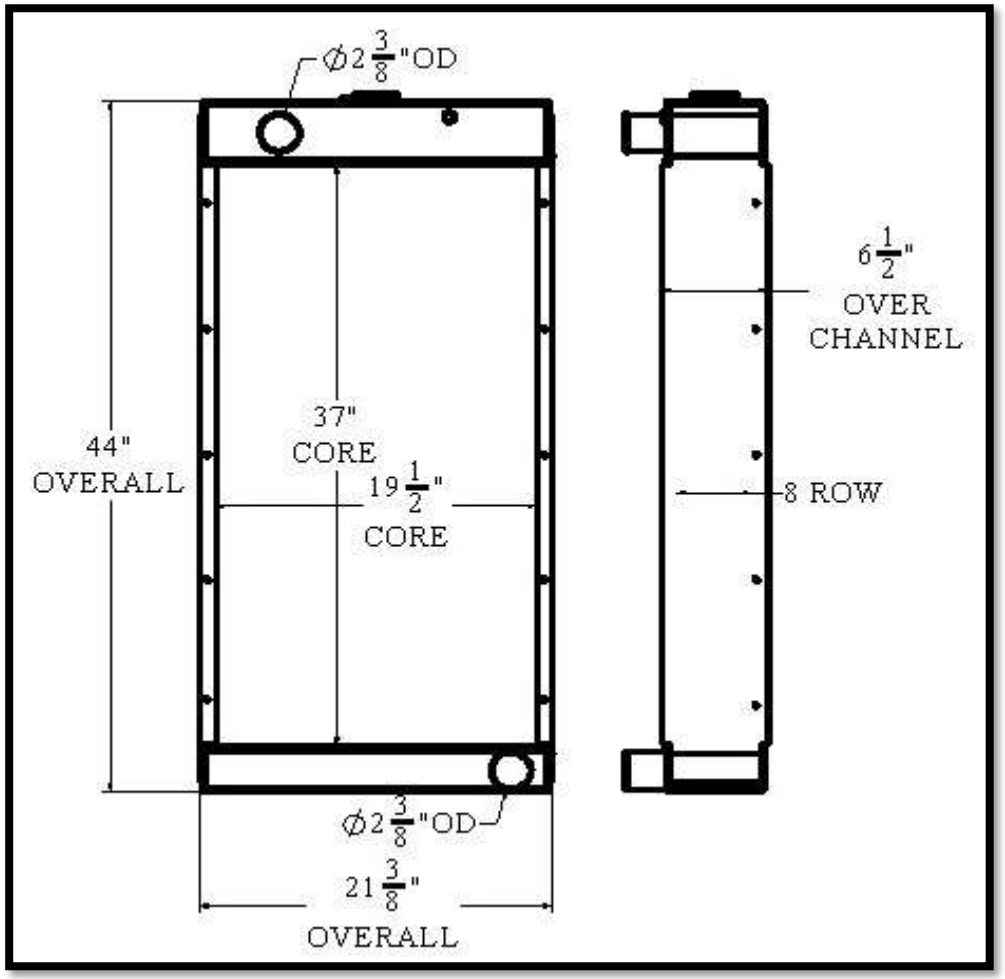

Overall Dimensions: 44” X 21-3/8” X 6-1/2”
Core: 37” X 19-1/2” X 8 ROW
Inlet: 2-3/8”OD
Outlet: 2-3/8”OD

ST601

Listed dimensions may vary slightly from OE

ST602

BGR Part Number: ST-0603-2M-F
51066

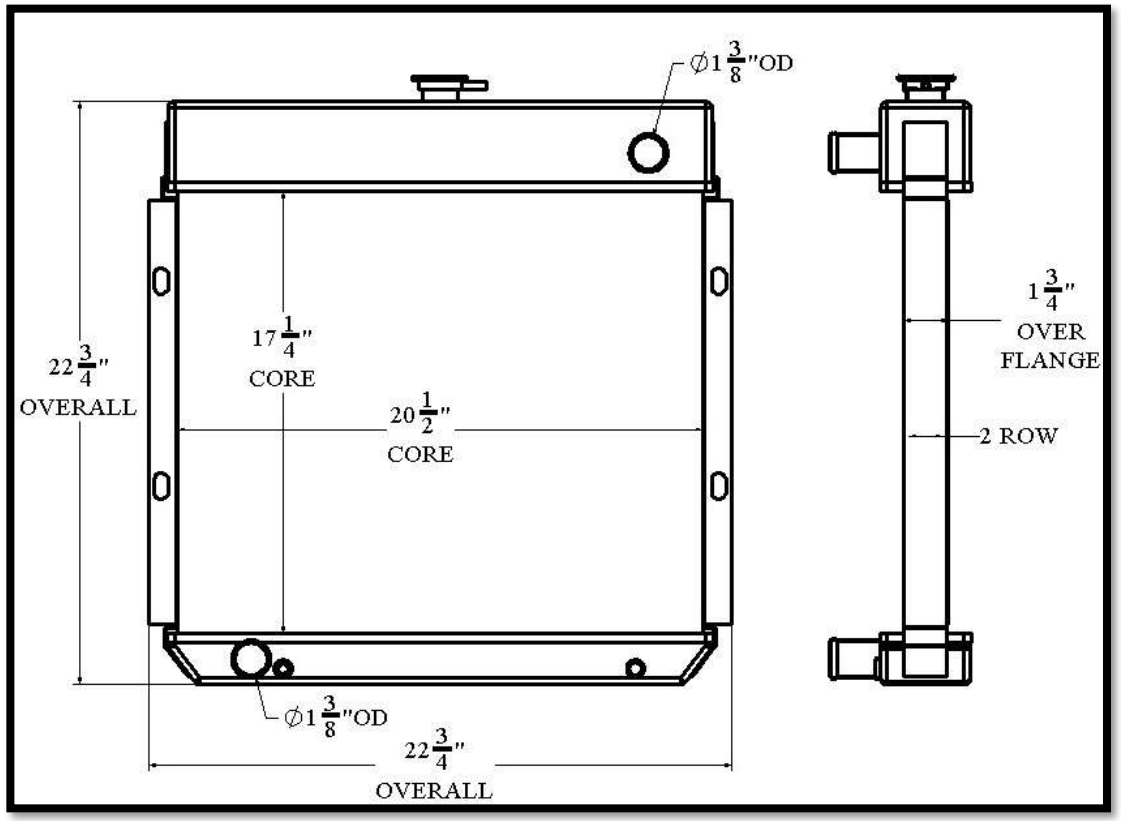

Overall Dimensions: 22-3/4” X 22-3/4” X 1-3/4”
Core: 17-1/4” X 20-1/2” X 2 ROW
Inlet: 1-3/8”OD
Outlet: 1-3/8”OD

Tel 1.800.774.2168
www.bgrradiator.com
BGR RADIATOR

BGR Part Number: ST-0604-3M-NC

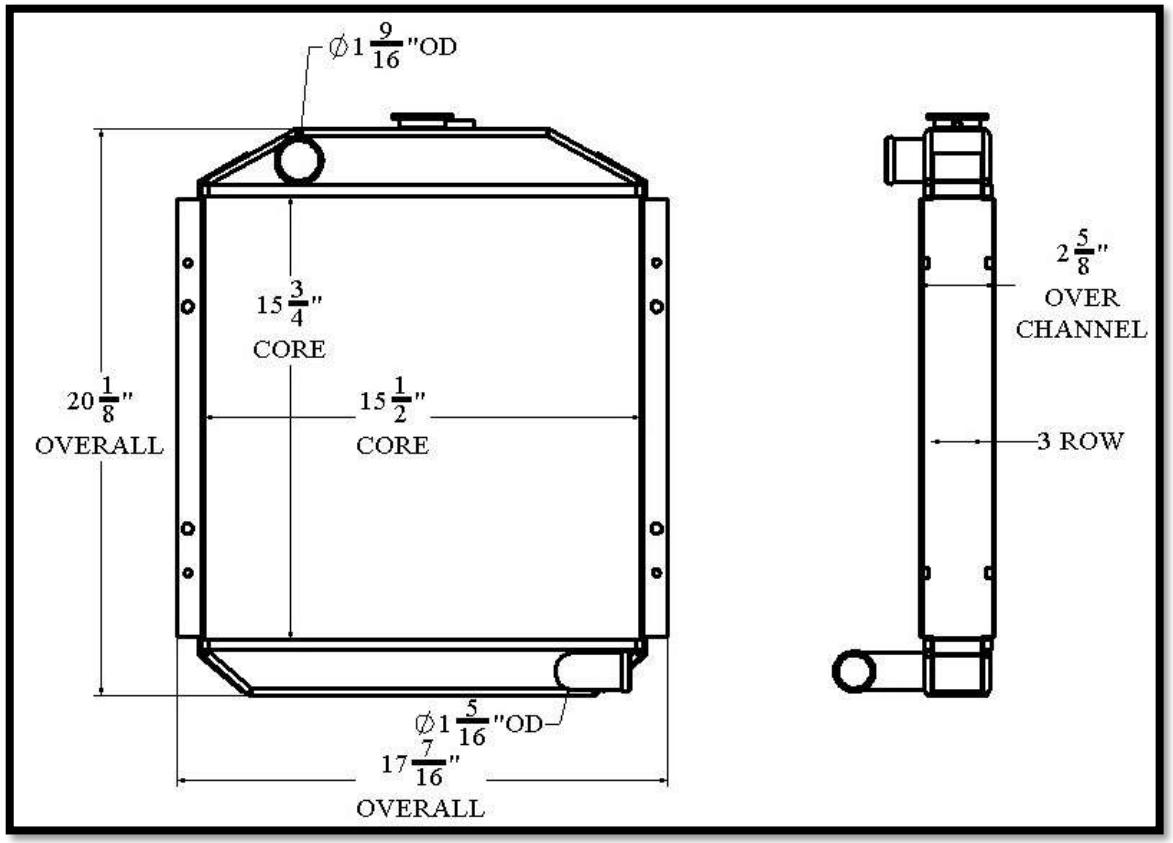

Overall Dimensions: 20-1/8” X 17-7/16” X 2-5/8”
Core: 15-3/4” X 15-1/2” X 3 ROW
Inlet: 1-9/16”OD
Outlet: 1-5/16”OD

ST603

Listed dimensions may vary slightly from OE

ST604

BGR Part Number: ST-0605-6M-NC
GM29699, REV A

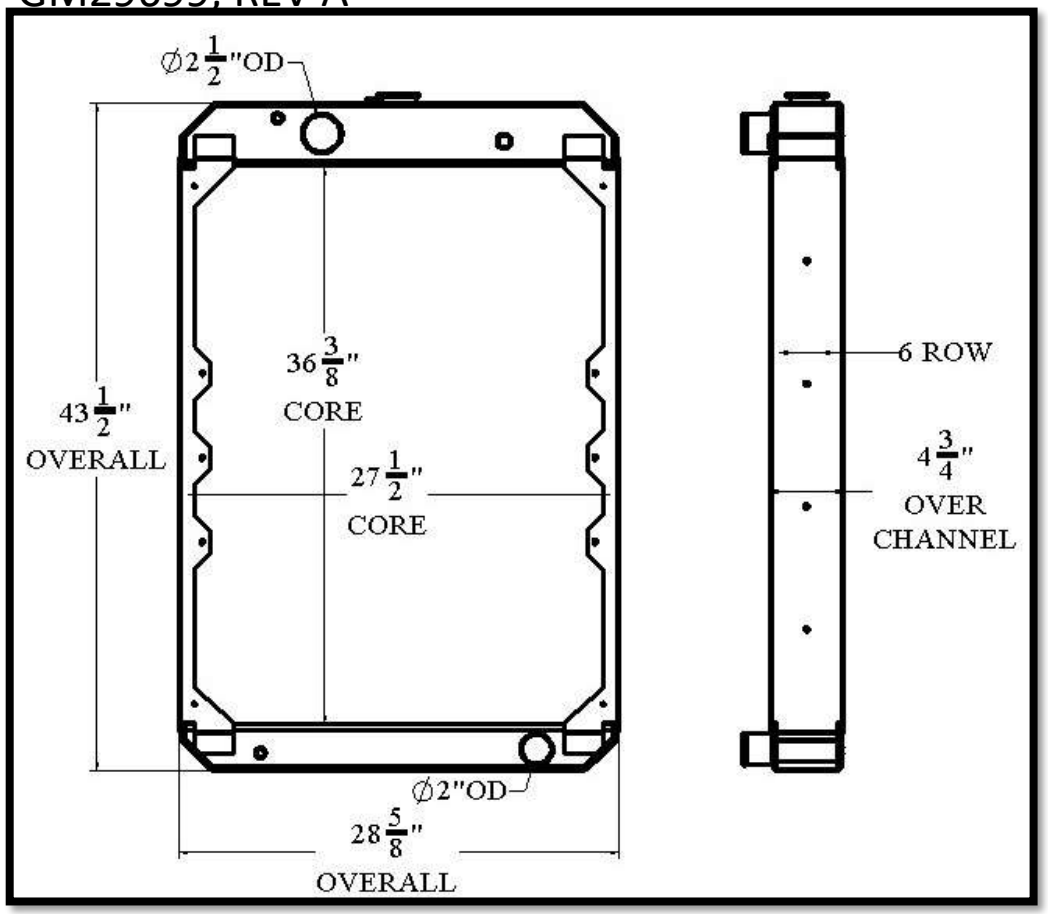

Overall Dimensions: 43-1/2” X 28-5/8” X 4-3/4”
Core: 36-3/8” X 27-1/2” X 6 ROW
Inlet: 2-1/2”OD
Outlet: 2”OD

Tel 1.800.774.2168
www.bgrradiator.com

BGR Part Number: ST-0606-4M-NC
10000-39054, 0F2857A

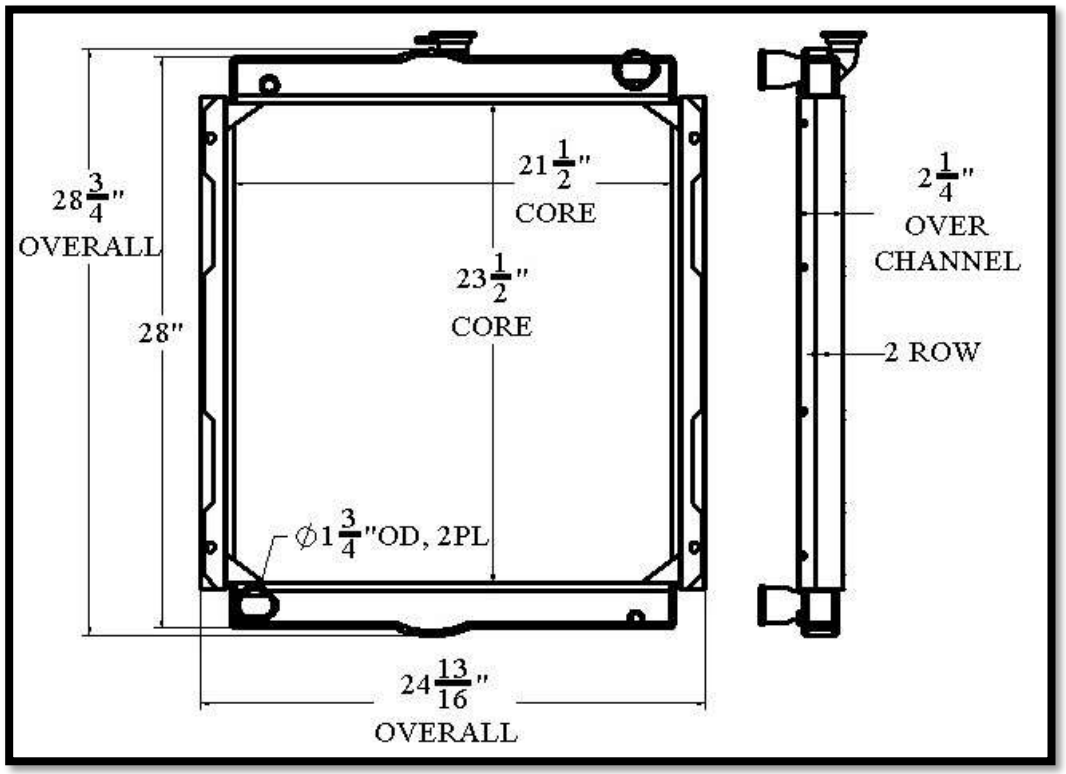

Overall Dimensions: 28-3/4” X 24-13/16” X 2-1/4”
Core: 23-1/2” X 21-1/2” X 2 ROW
Inlet: 1-3/4”OD
Outlet: 1-3/4”OD

ST605

Listed dimensions may vary slightly from OE

ST606

BGR Part Number: ST-0607-4M-F

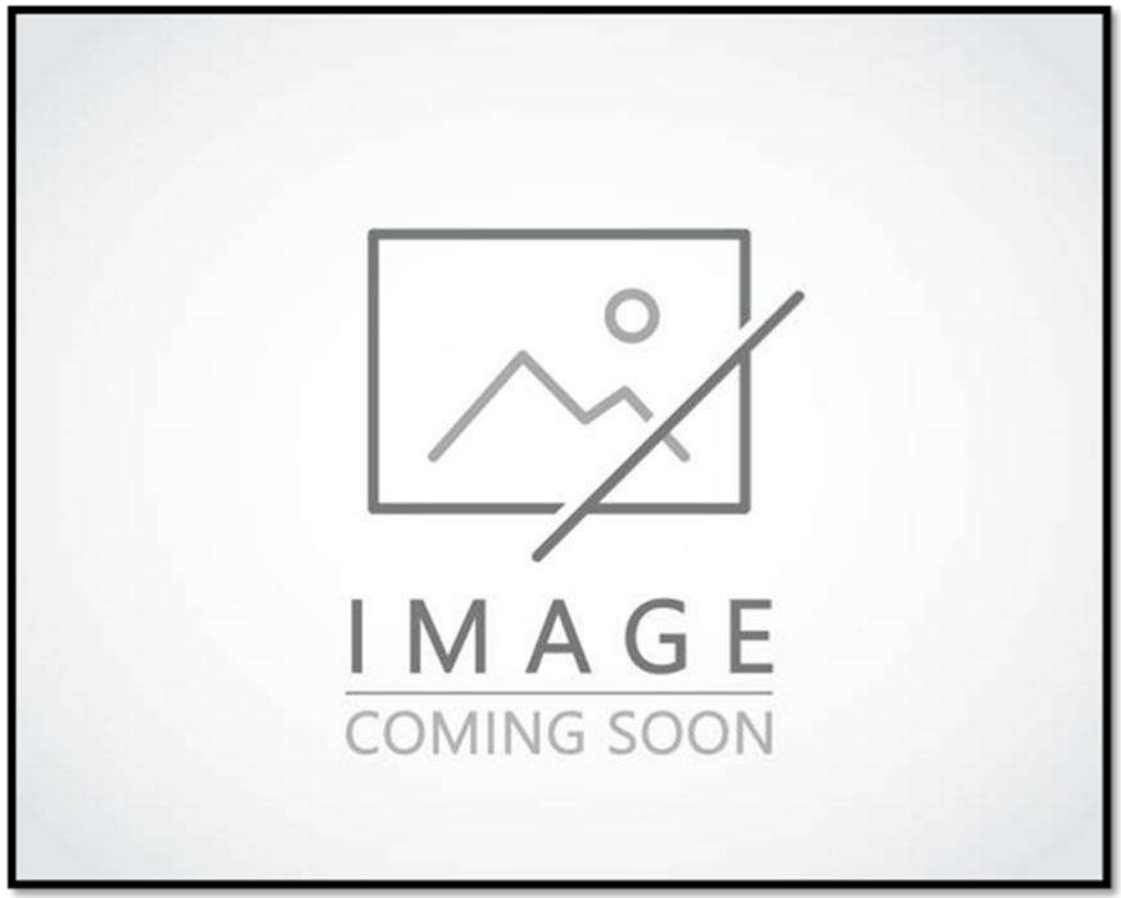

Overall Dimensions:
Core:
Inlet:
Outlet:

ST607

Tel 1.800.774.2168
www.bgrradiator.com

BGR Part Number: ST-0608-3M-F

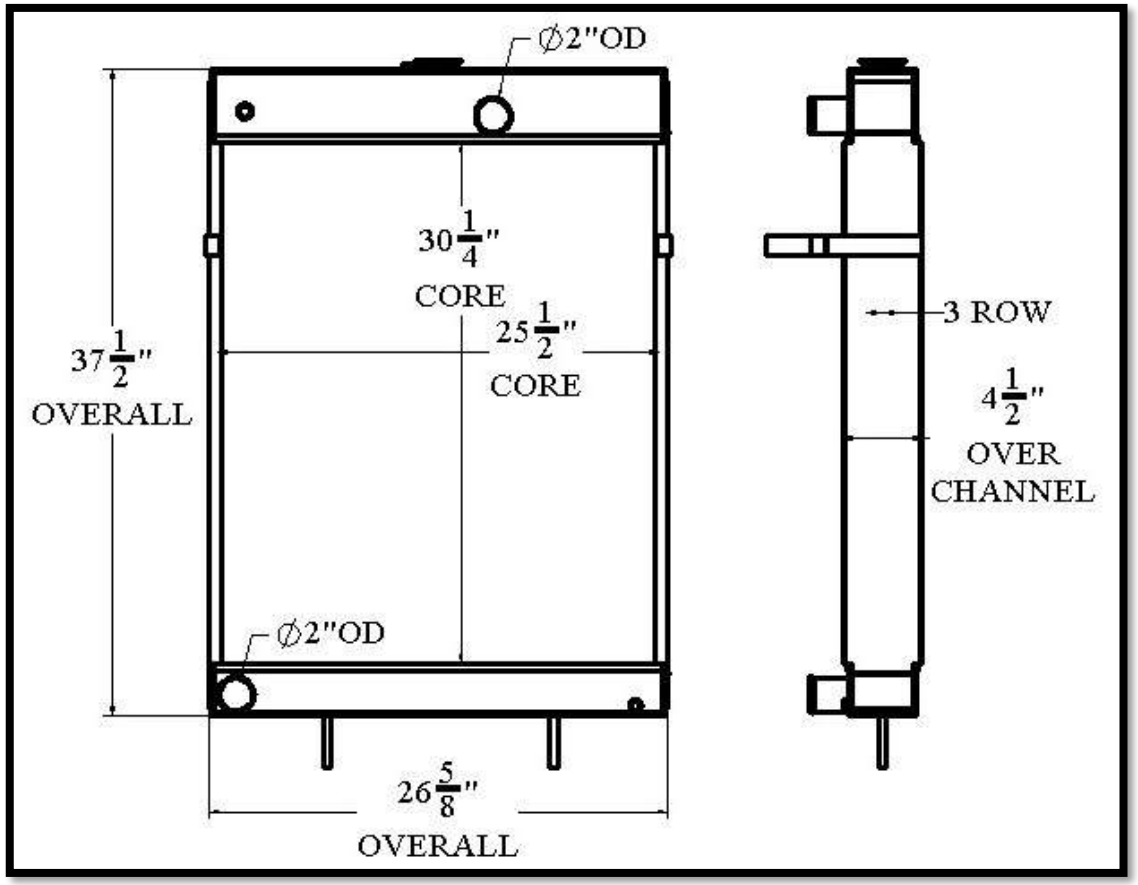

Overall Dimensions: 37-1/2” X 26-5/8” X 4-1/2”
Core: 30-1/4” X 25-1/2” X 3 ROW
Inlet: 2”OD
Outlet: 2”OD

ST608

Listed dimensions may vary slightly from OE

BGR Part Number: ST-0609-4M-F

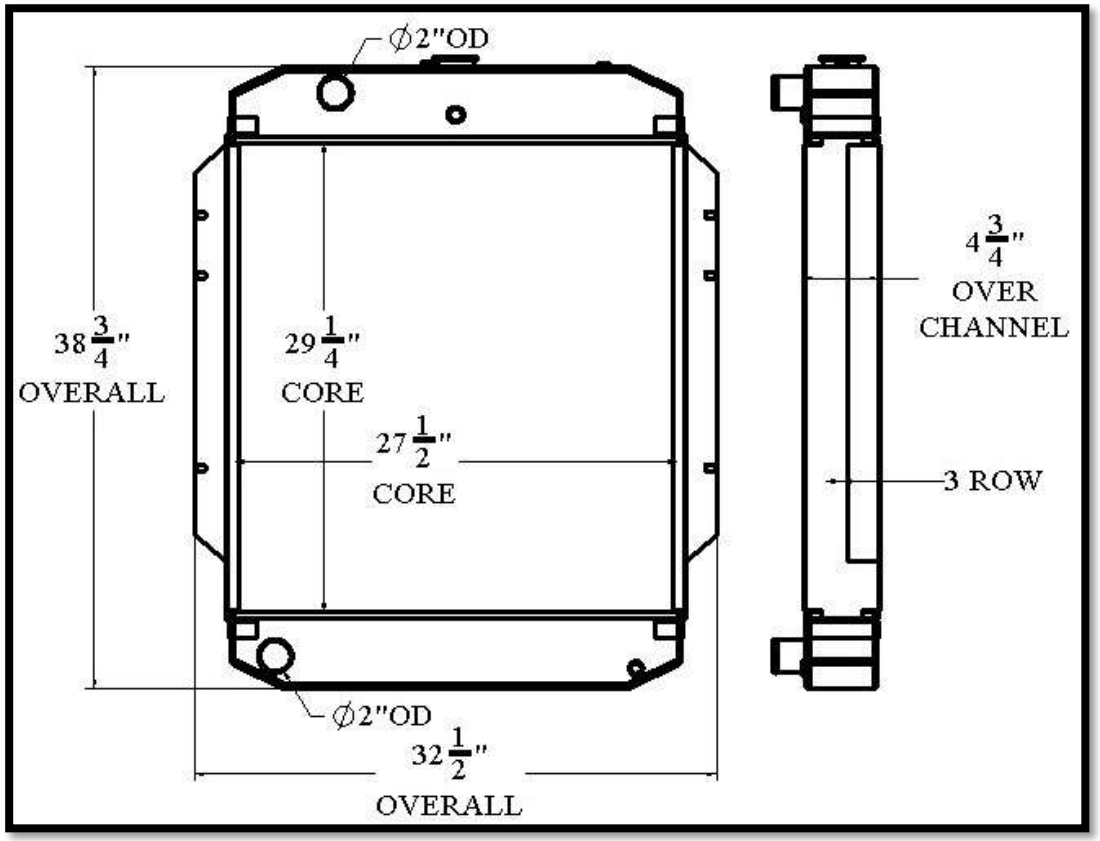

Overall Dimensions: 38-3/4” X 32-1/2” X 4-3/4”
Core: 29-1/4” X 27-1/2” X 3 ROW
Inlet: 2”OD
Outlet: 2”OD

Tel 1.800.774.2168
www.bgrradiator.com

BGR Part Number: ST-0610-5M-NC

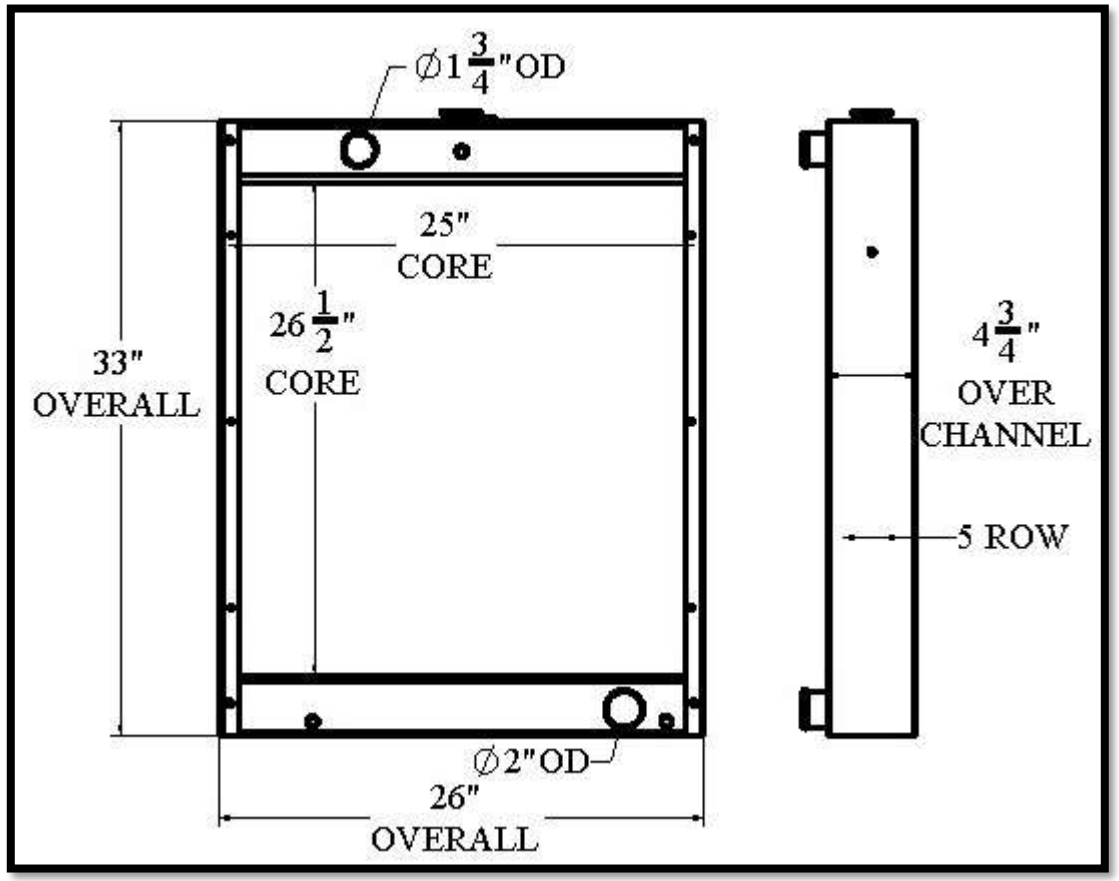

Overall Dimensions: 33” X 26” X 4-3/4”
Core: 26-1/2” X 25” X 5 ROW
Inlet: 1-3/4”OD
Outlet: 2”OD

ST609

Listed dimensions may vary slightly from OE

ST610

BGR Part Number: ST-0611-5M-NC

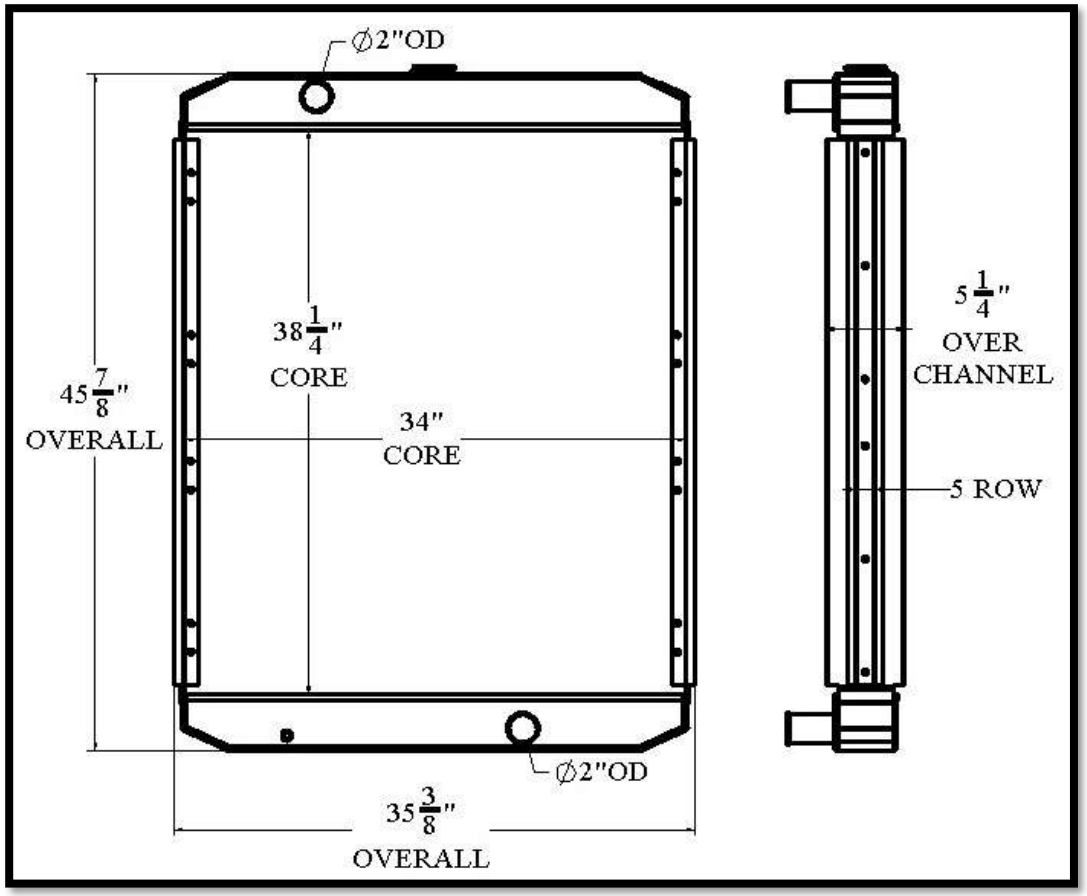

Overall Dimensions: 45-7/8” X 35-3/8” X 5-1/4”
Core: 38-1/4” X 34” X 5 ROW
Inlet: 2”OD
Outlet: 2”OD

Tel 1.800.774.2168
www.bgrradiator.com

BGR Part Number: ST-0612-4M-NC

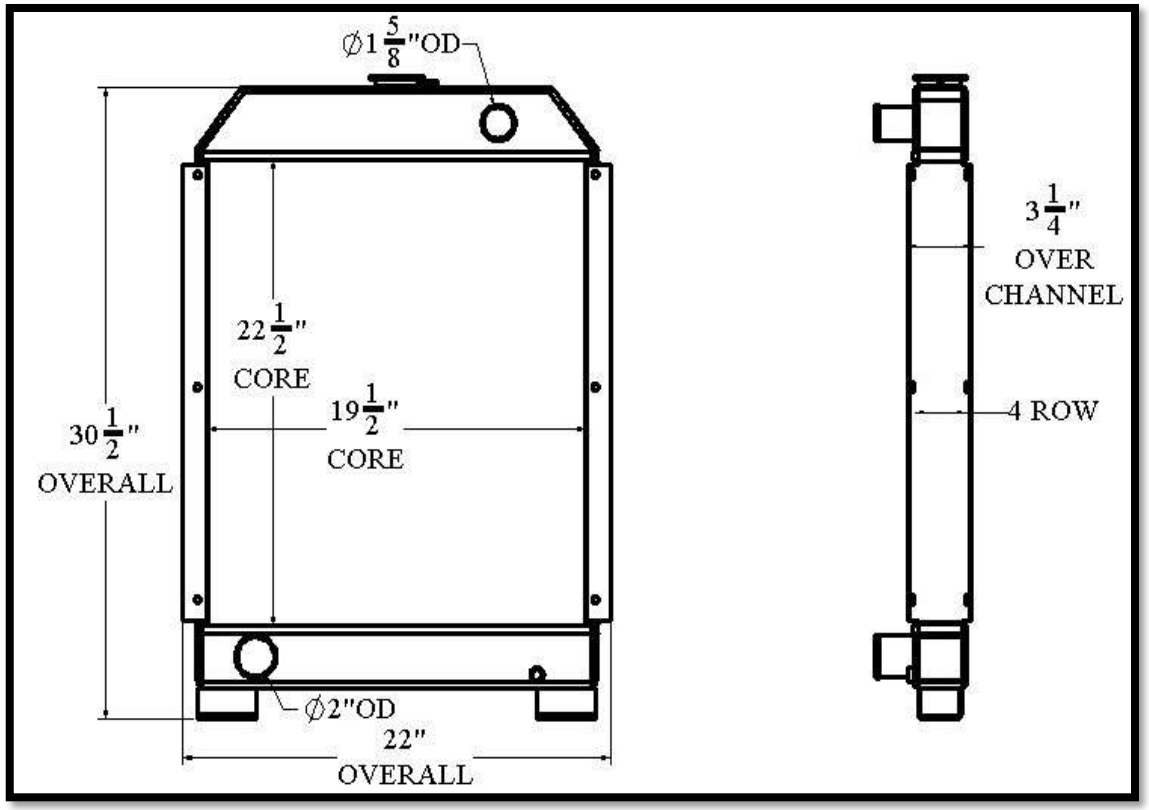

Overall Dimensions: 30-1/2” X 22” X 3-1/4”
Core: 22-1/2” X 19-1/2” X 4 ROW
Inlet: 1-5/8”OD
Outlet: 2”OD

ST611

Listed dimensions may vary slightly from OE

ST612

BGR Part Number: ST-0613-5M-EF

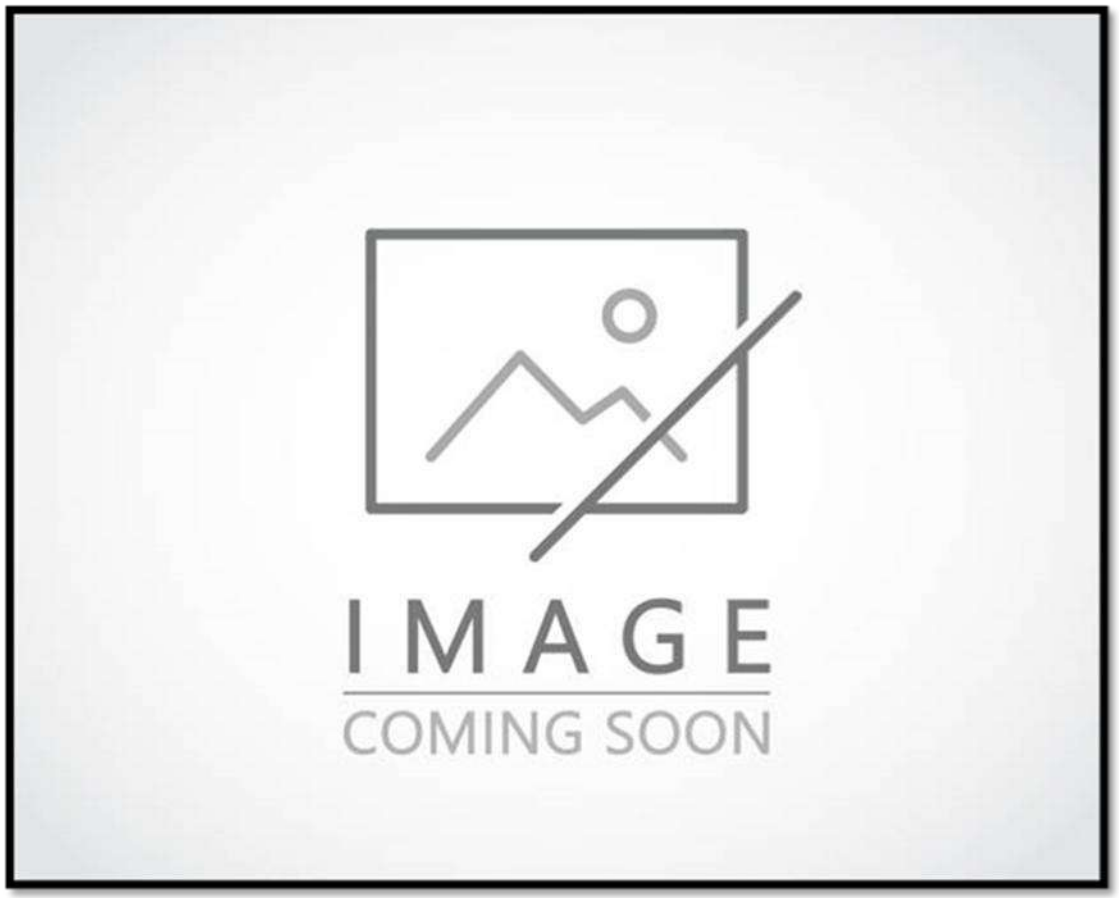

Overall Dimensions:
Core:
Inlet:
Outlet:

ST613

Tel 1.800.774.2168
www.bgrradiator.com

BGR Part Number: ST-0614-6M-NC

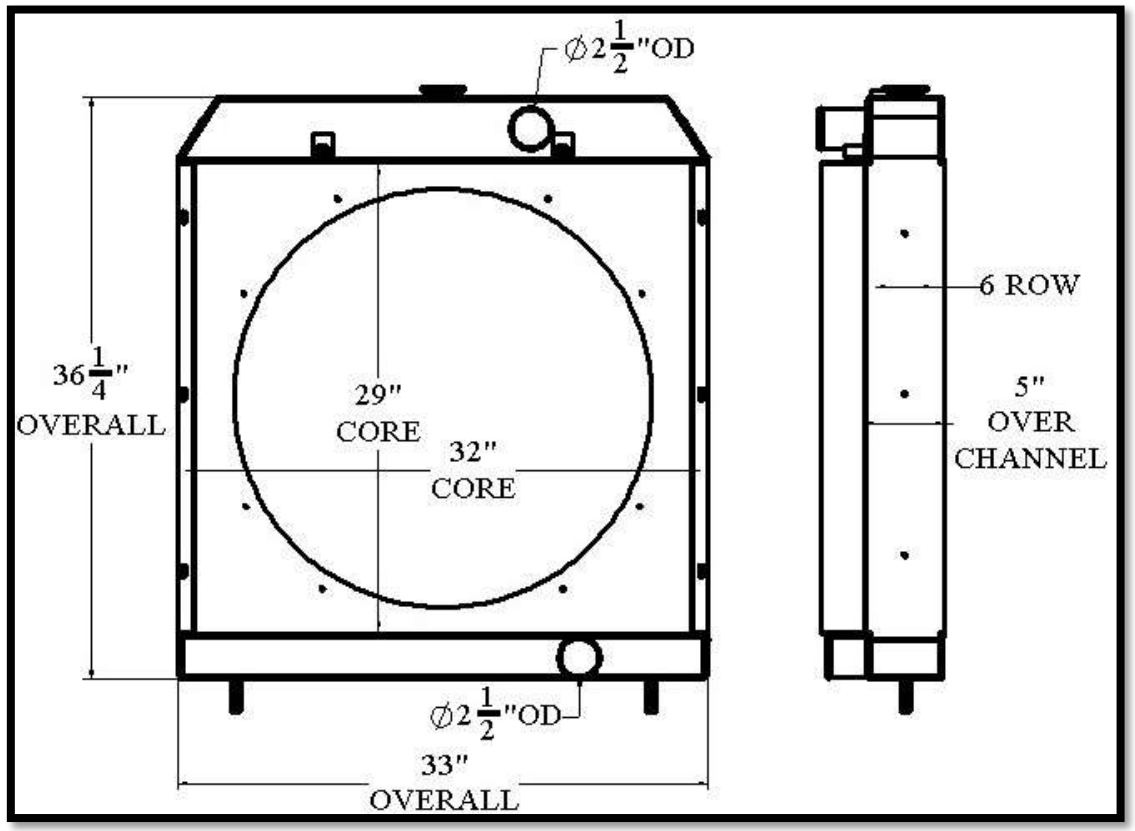

Overall Dimensions:36-1/4” X 33” X 5”
Core: 29” X 32” X 6 ROW
Inlet: 2-1/2”OD
Outlet: 2-1/2”OD

ST614

Listed dimensions may vary slightly from OE

BGR Part Number: ST-0615-5M-F

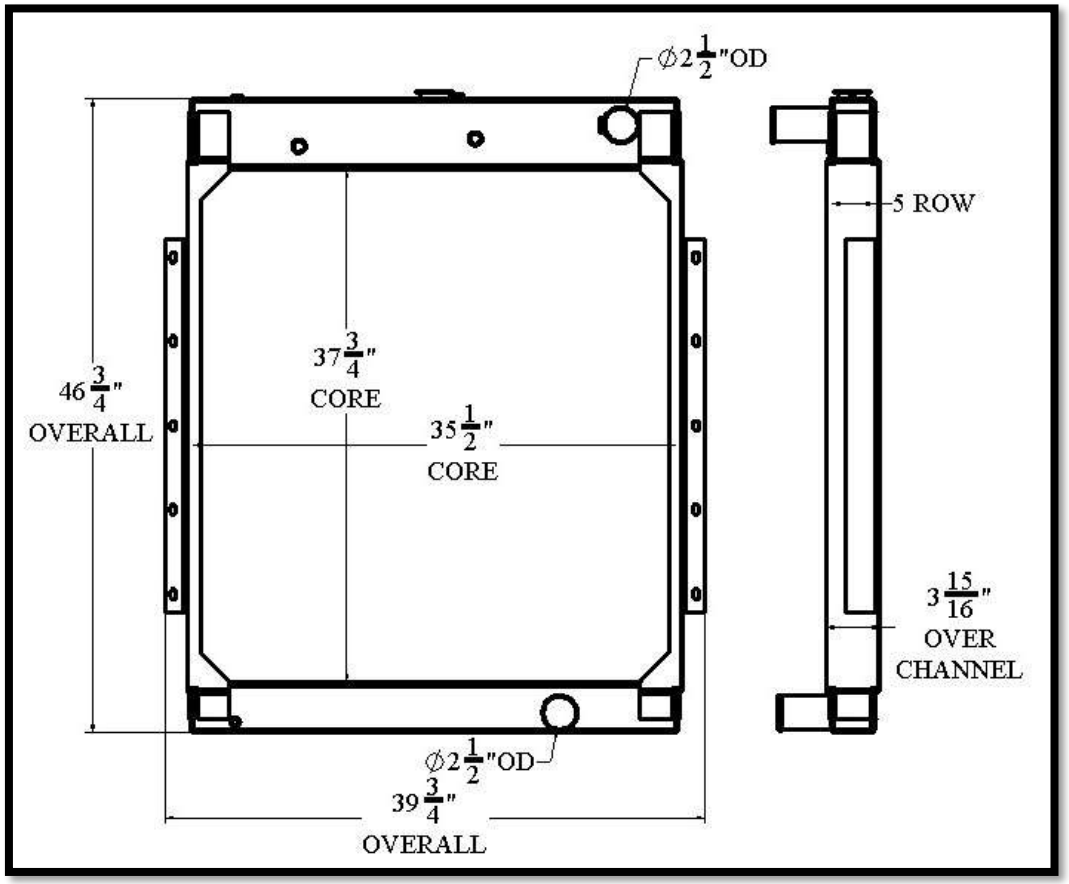

Overall Dimensions: 46-3/4” X 39-3/4” X 3-15/16”
Core: 37-3/4” X 35-1/2” X 5 ROW
Inlet: 2-1/2”OD
Outlet: 2-1/2”OD

Tel 1.800.774.2168
www.bgrradiator.com

BGR Part Number: ST-0616-2M-NC

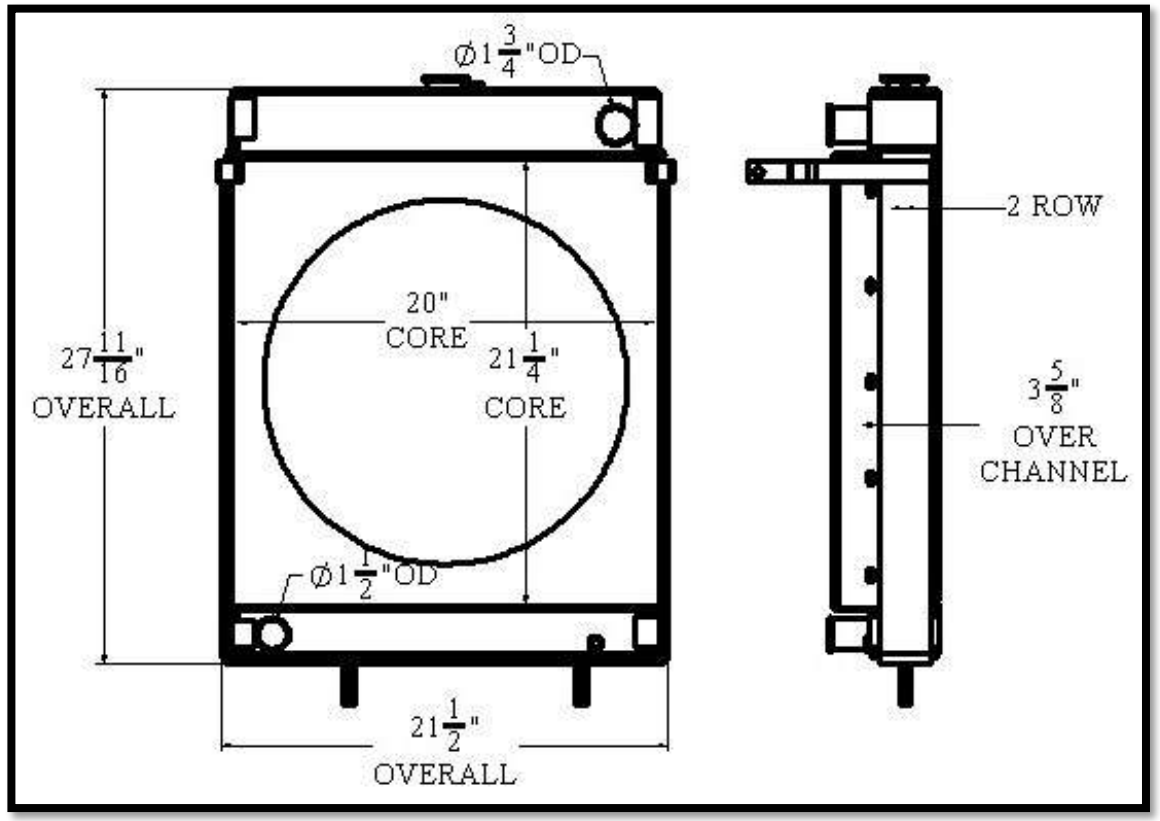

Overall Dimensions: 27-11/16” X 21-1/2” X 3-5/8”
Core: 21-1/4” X 20” X 2 ROW
Inlet: 1-3/4”OD
Outlet: 1-1/2”OD

ST615

Listed dimensions may vary slightly from OE

ST616

BGR Part Number: ST-0617-4M-NC

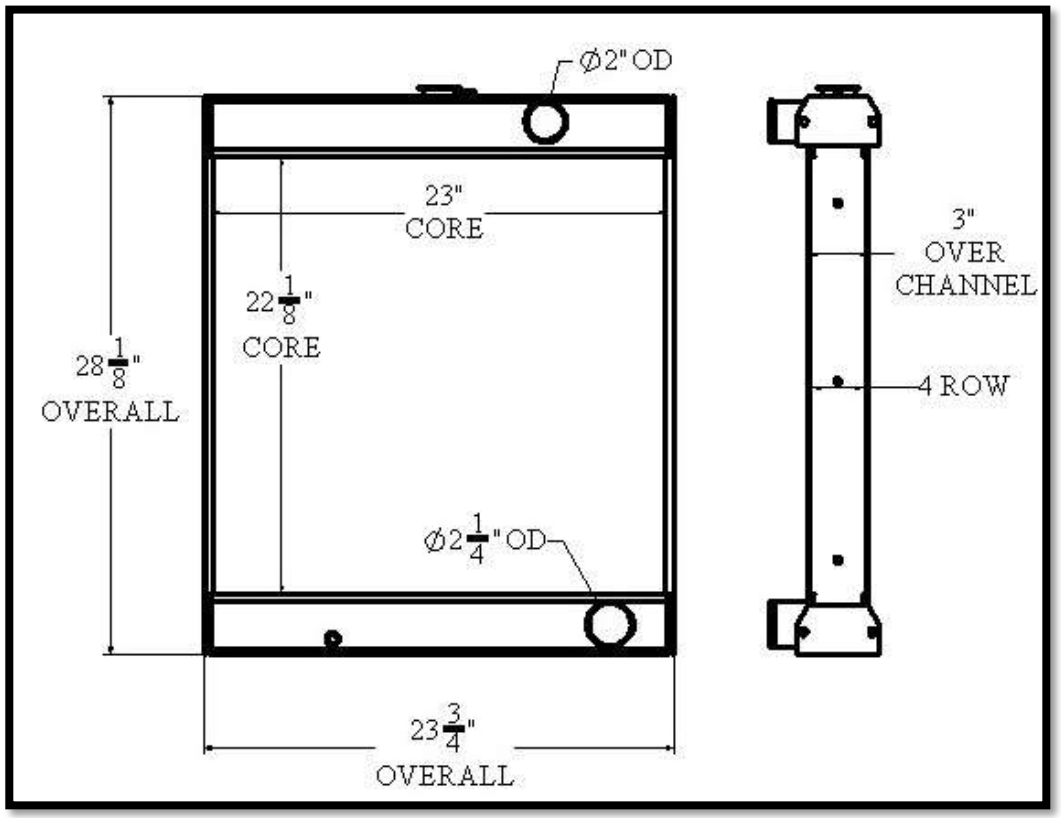

Overall Dimensions: 28-1/8” X 23-3/4” X 3”
Core: 22-1/8” X 23” X 4 ROW
Inlet: 2”OD
Outlet: 2-1/4”OD

Tel 1.800.774.2168
www.bgrradiator.com

BGR Part Number: ST-0618-7T-EF

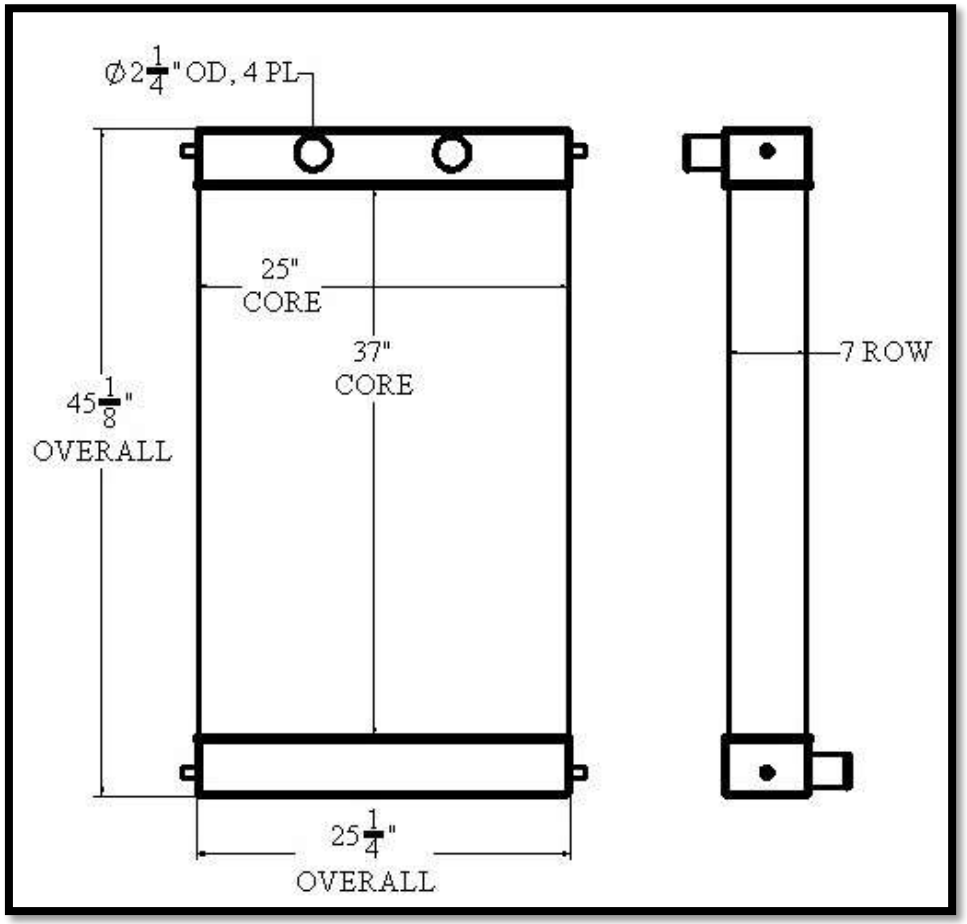

Overall Dimensions: 45-1/8” X 24-1/4” X 5-1/4”
Core: 37” X 25” X 7 ROW
Inlet: 2-1/4”OD, 2PL
Outlet: 2-1/4”OD, 2PL

ST617

Listed dimensions may vary slightly from OE

ST618

BGR Part Number: ST-0619-4M-F

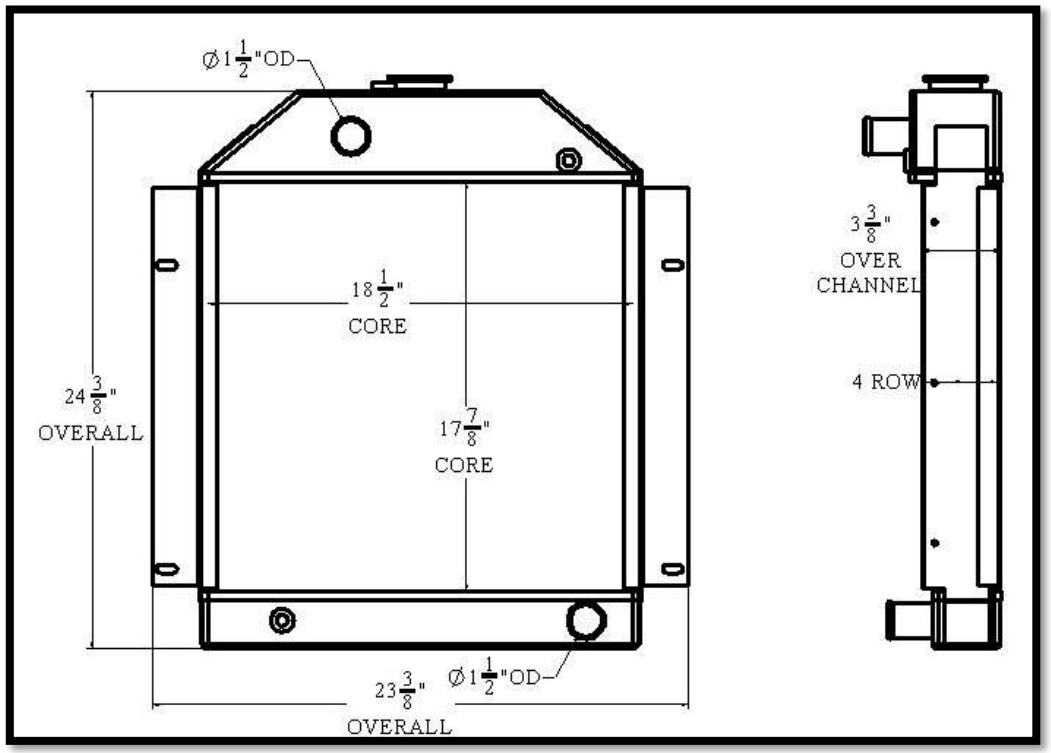

Overall Dimensions: 24-3/8” X 23-3/8” X 3-3/8”
Core: 16” X 18-1/2” X 4 ROW
Inlet: 1-1/2”OD
Outlet: 1-1/2”OD

Tel 1.800.774.2168
www.bgrradiator.com

BGR Part Number: ST-0620-4M-EF

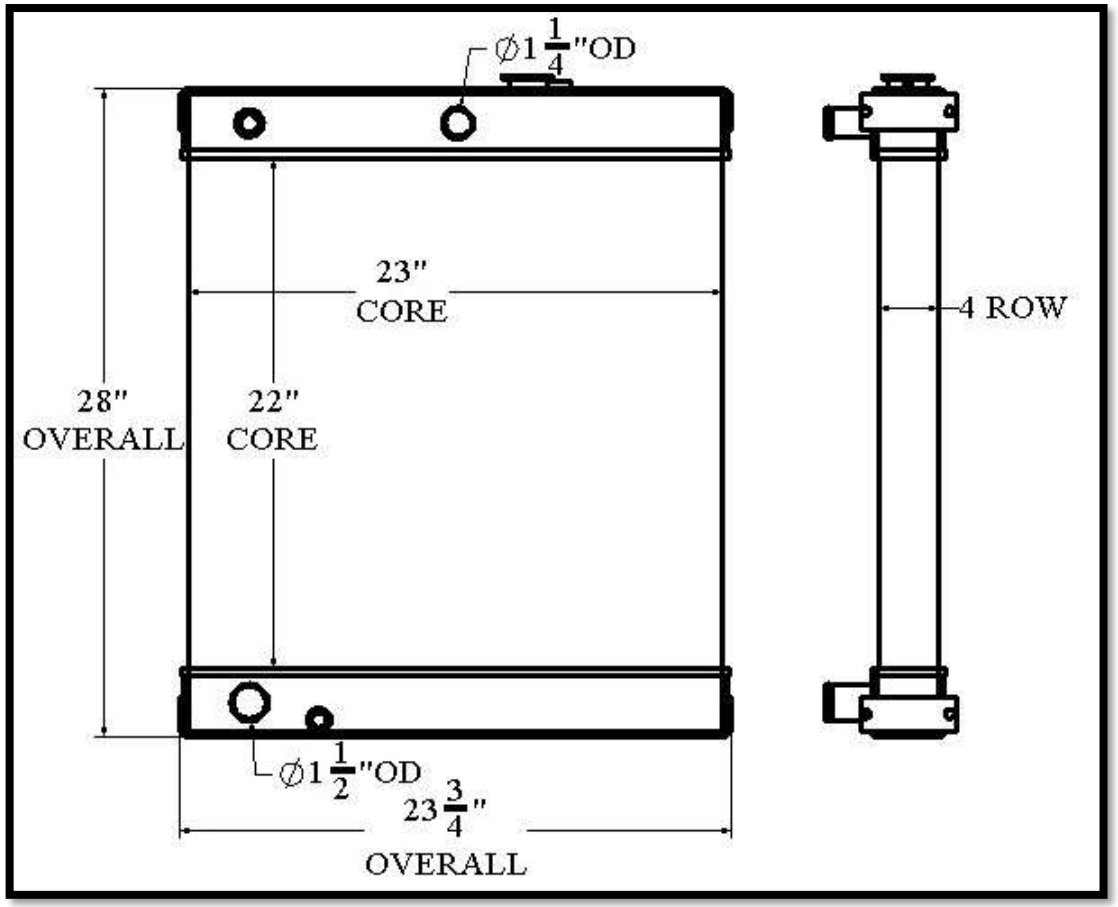

Overall Dimensions: 28” X 23-3/4”
Core: 22” X 23” X 4 ROW
Inlet: 1-1/4”OD
Outlet: 1-1/2”OD

ST619

Listed dimensions may vary slightly from OE

ST620

BGR Part Number: ST-0621-3M-NC
RS6737

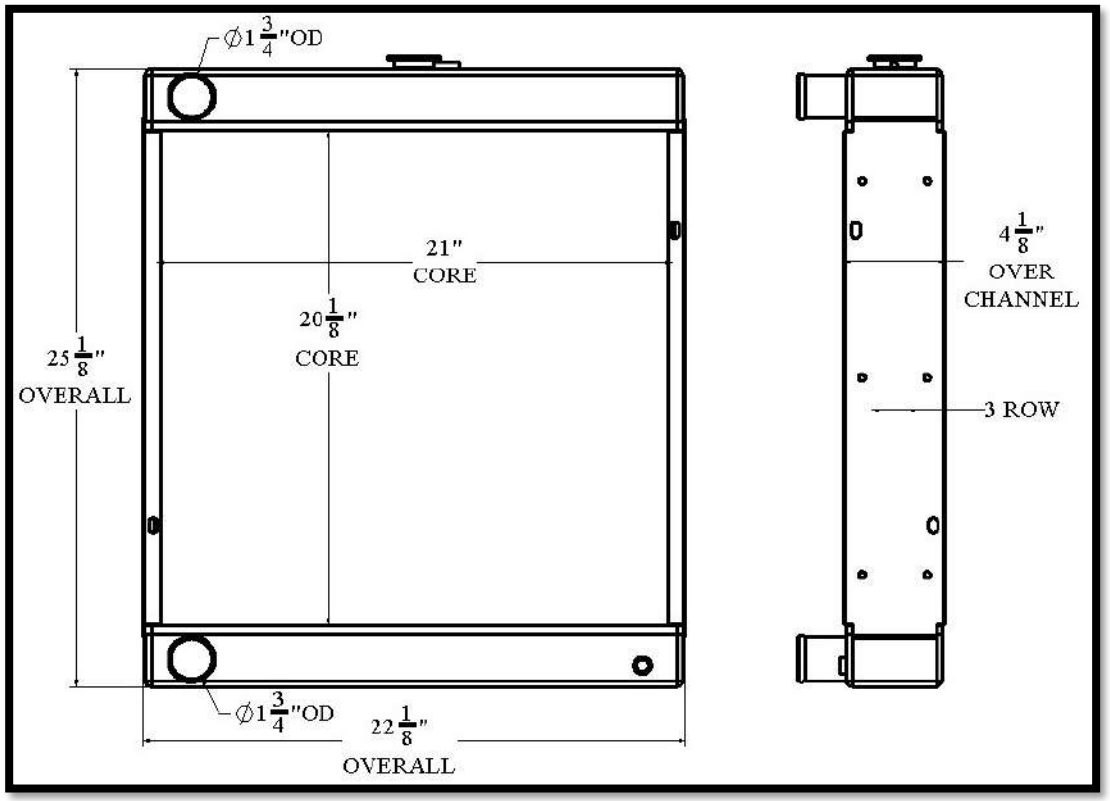

Overall Dimensions: 25-1/8” X 22-1/8” X 4-1/8”
Core: 20-1/8” X 21” X 3 ROW
Inlet: 1-3/4”OD
Outlet: 1-3/4”OD

Tel 1.800.774.2168
www.bgrradiator.com
BGR RADIATOR

BGR Part Number: ST-0622-4M-NC
RS6334

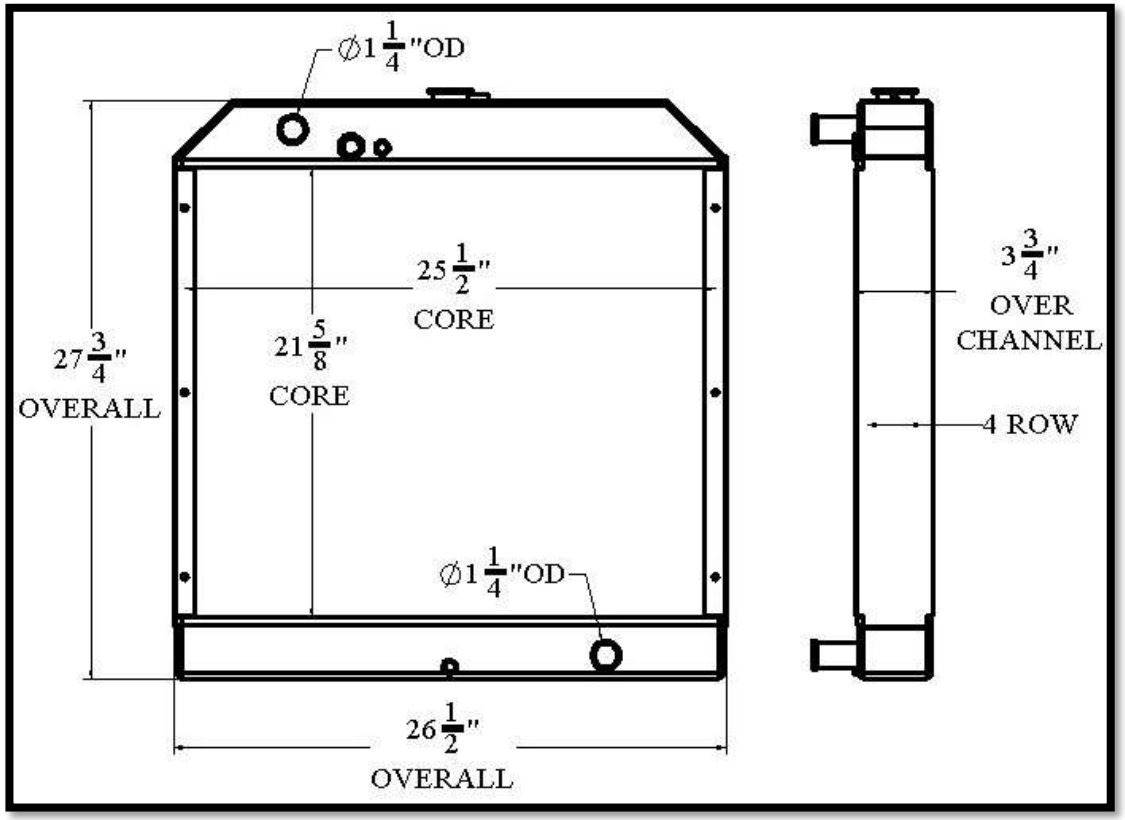

Overall Dimensions: 27-3/4” X 26-1/2” X 3-3/4”
Core: 21-5/8” X 25-1/2” X 4 ROW
Inlet: 1-1/4”OD
Outlet: 1-1/4”OD

ST621

Listed dimensions may vary slightly from OE

ST622

BGR Part Number: ST-0623-6M-EF

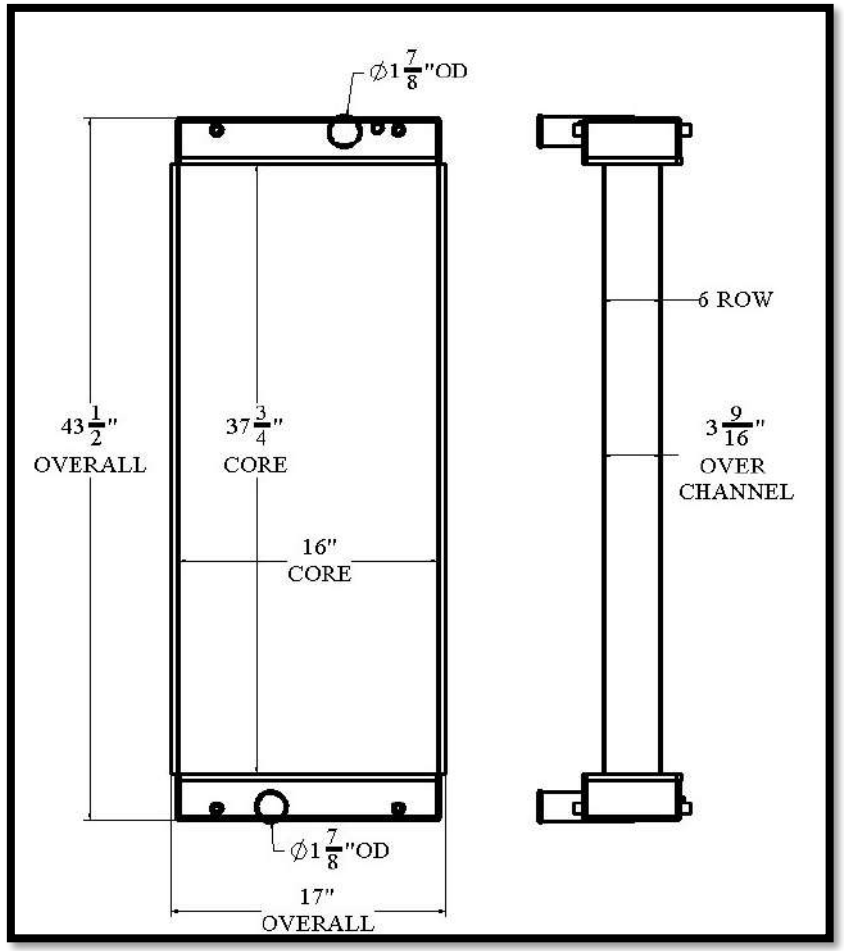

Overall Dimensions: 43-1/2” X 17” X 3-9/16”
Core: 37-3/4” X 16” X 6 ROW
Inlet: 1-7/8”OD
Outlet: 1-7/8”OD

Tel 1.800.774.2168
www.bgrradiator.com

BGR Part Number: ST-0624

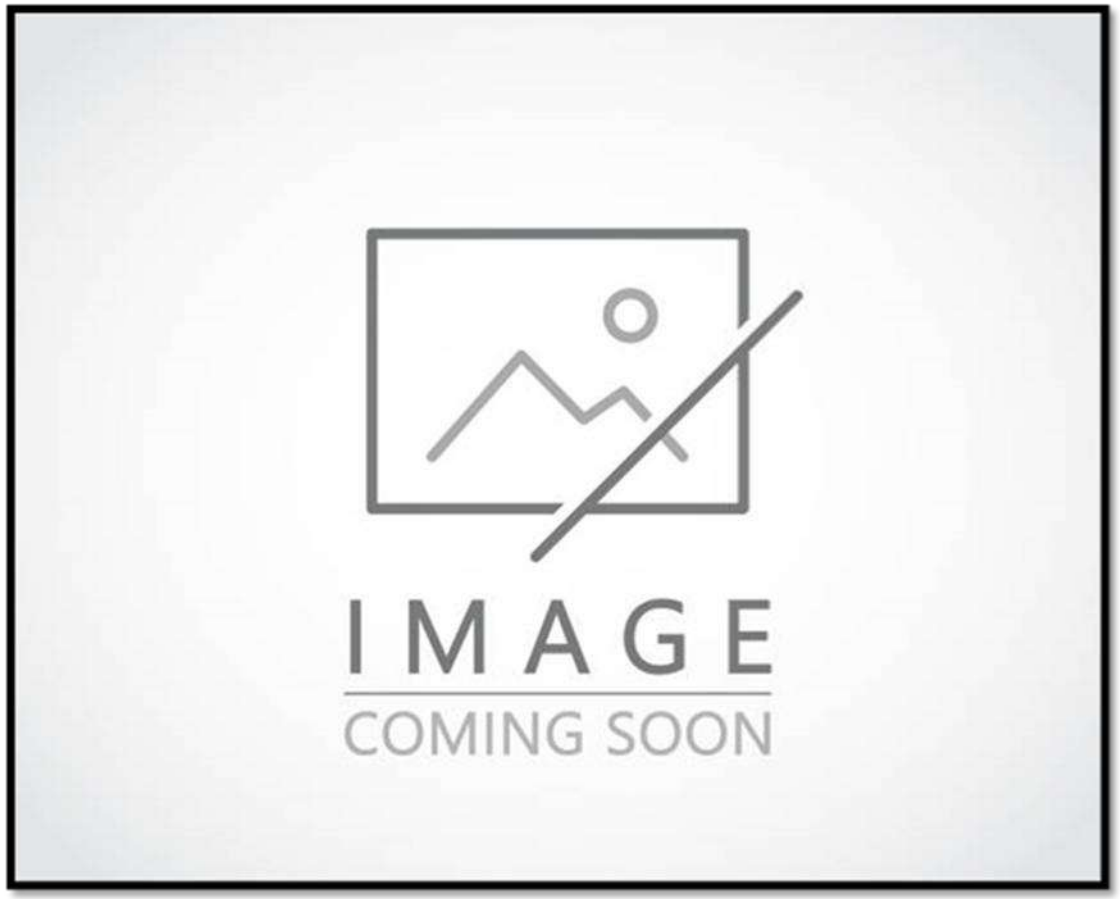

Overall Dimensions:
Core:
Inlet:
Outlet:

ST623

Listed dimensions may vary slightly from OE

ST624

BGR Part Number: ST-0625-3M-NC
GM63648

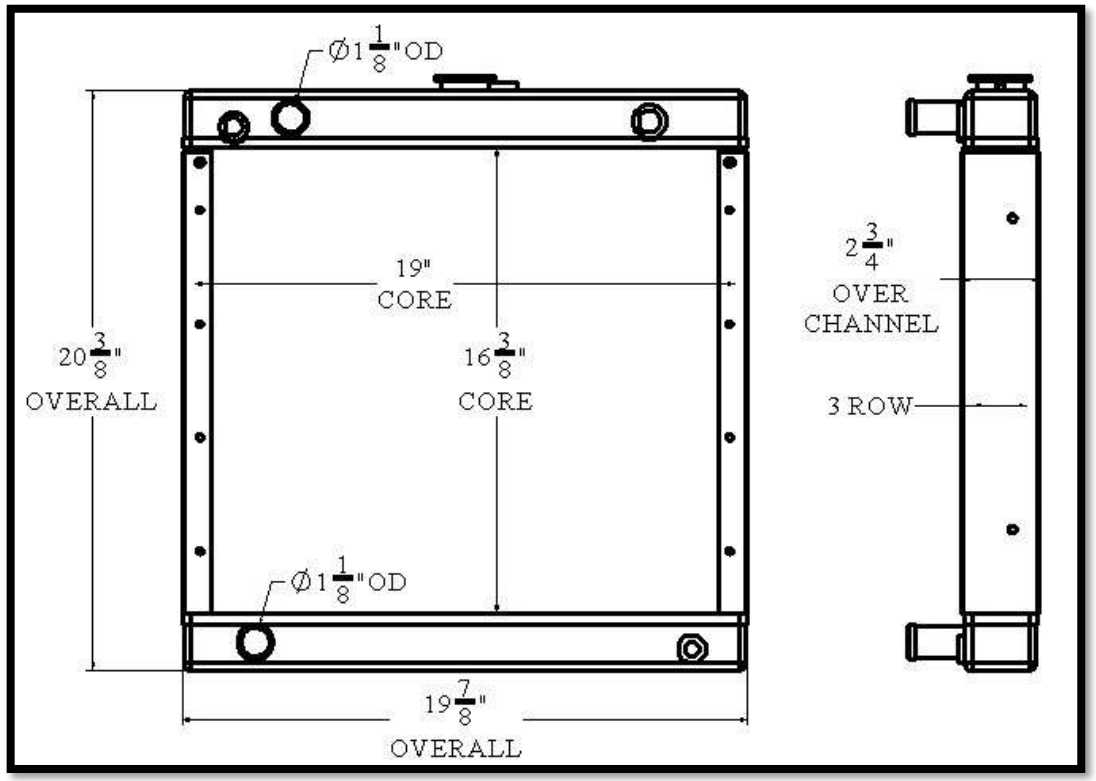

Overall Dimensions: 20-3/8” X 19-7/8” X 2-3/4”
Core: 16-3/8” X 19” X 3 ROW
Inlet: 1-1/8”OD
Outlet: 1-1/8”OD

Tel 1.800.774.2168
www.bgrradiator.com

BGR Part Number: ST-0626-2M-F
OG1286

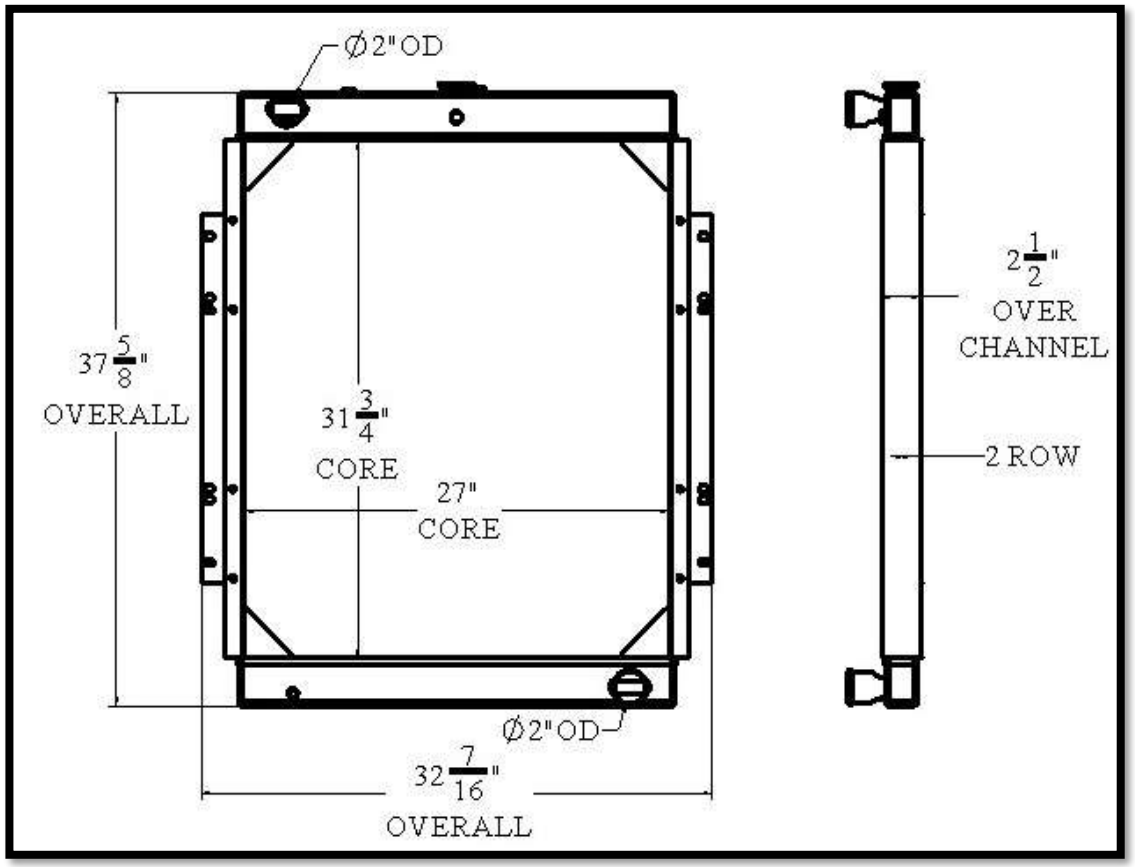

Overall Dimensions: 37-5/8” X 32-7/16” X 2-1/2”
Core: 31-3/4” X 27” X 2 ROW
Inlet: 2”OD
Outlet: 2”OD

ST625

Listed dimensions may vary slightly from OE

ST626

BGR Part Number: ST-0627-3T-EF

130-6735

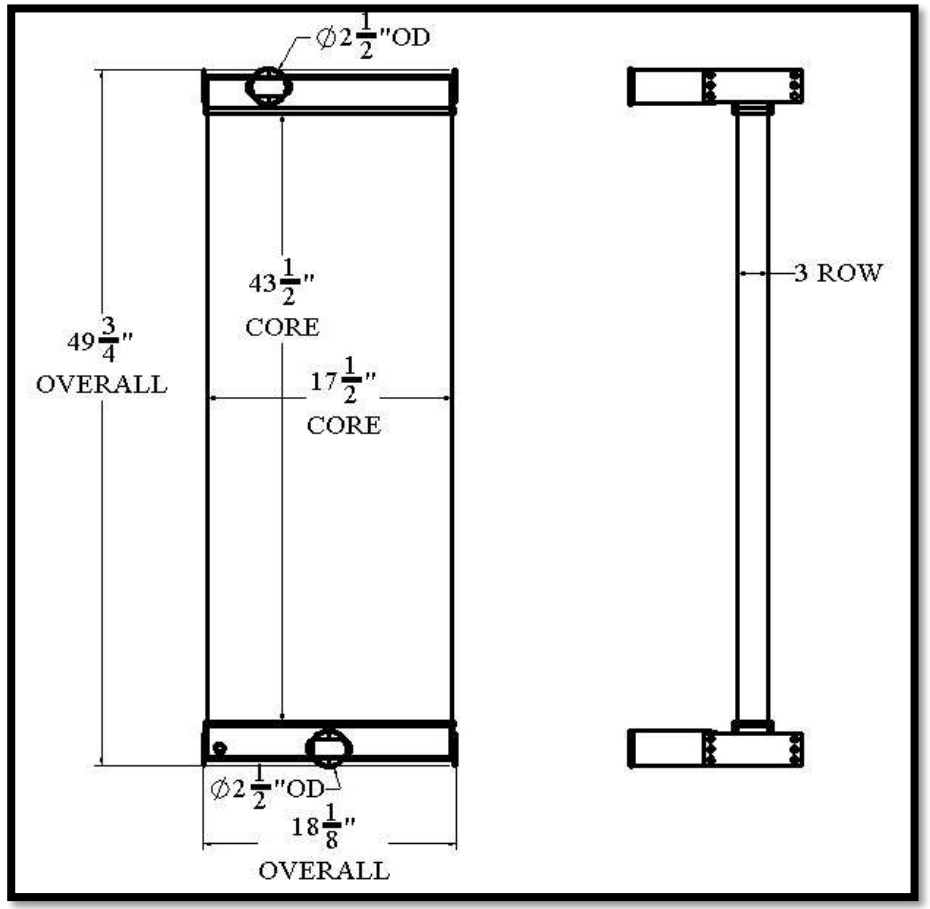

Overall Dimensions: 49-3/4” X 18-1/8”

Core: 43-1/2” X 17-1/2” X 3 ROW

Inlet: 2-1/2”OD

Outlet: 2-1/2”OD

Tel 1.800.774.2168
www.bgrradiator.com

BGR Part Number: ST-0628-9M-EF

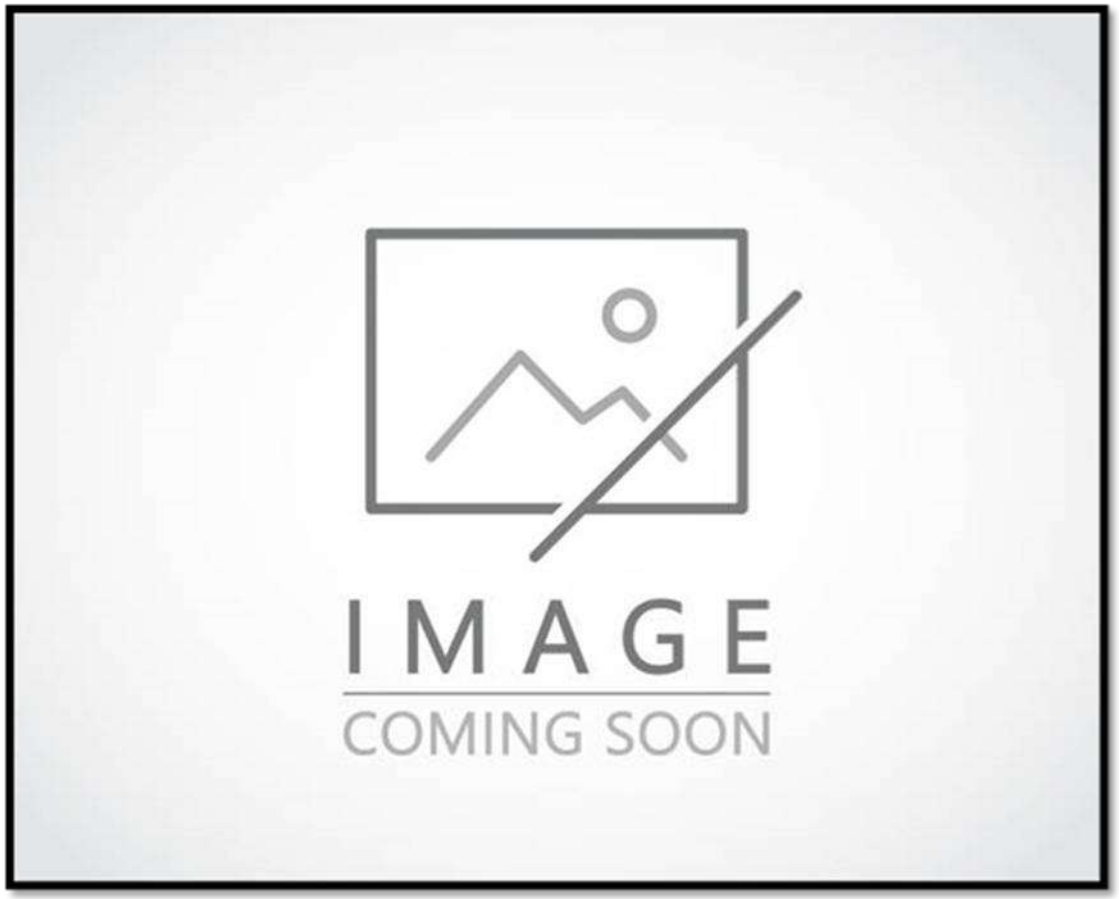

Overall Dimensions:

Core:

Inlet:

Outlet:

ST627

Listed dimensions may vary slightly from OE

ST628

BGR Part Number: ST-0629-9M-NC

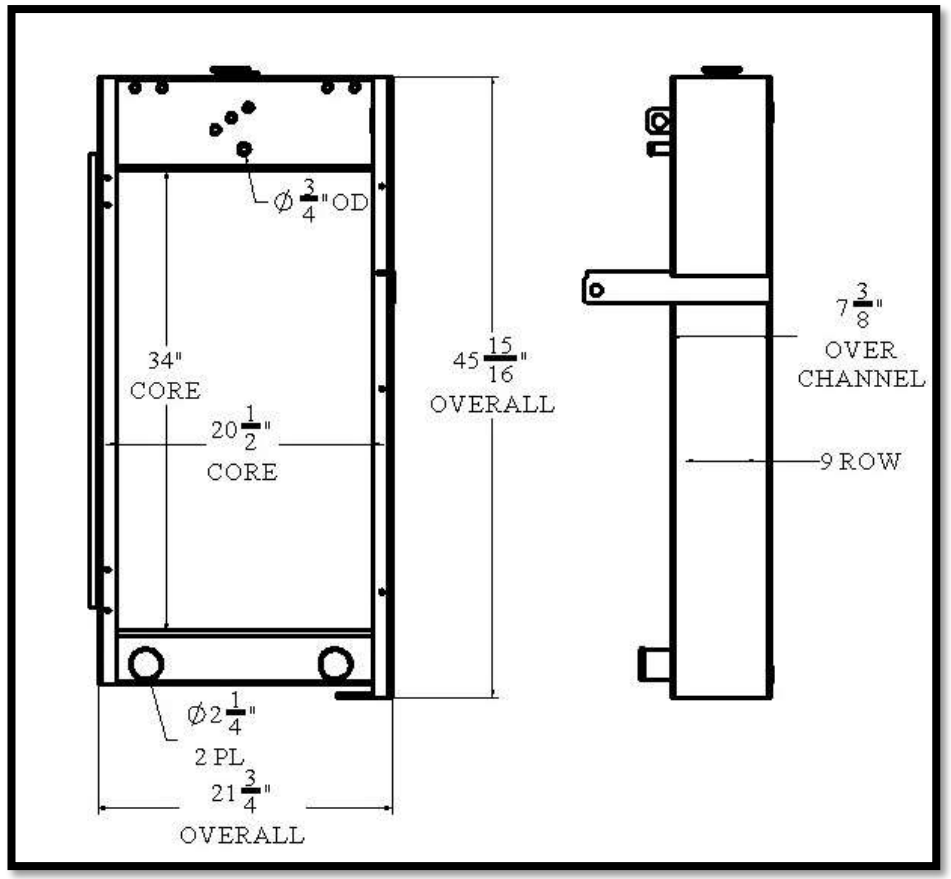

Overall Dimensions: 45-15/16” X 21-3/4” X 7-3/8”
Core: 34” X 20-1/2” X 9 ROW
Inlet: 2-1/4”OD
Outlet: 2-1/4”OD

Tel 1.800.774.2168
www.bgrradiator.com

BGR Part Number: ST-0630-5M-NC

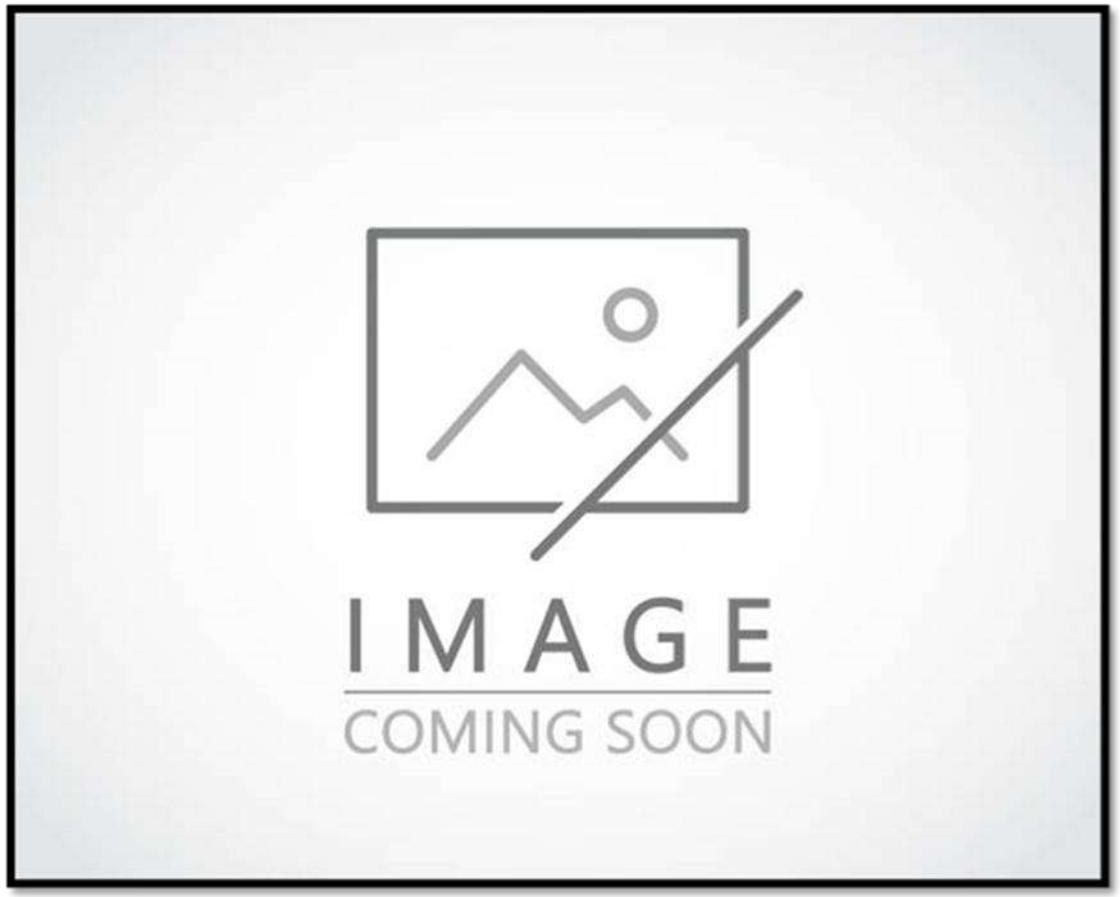

Overall Dimensions:
Core:
Inlet:
Outlet:

ST629

Listed dimensions may vary slightly from OE

ST630

BGR Part Number: ST-0631-6M-NC

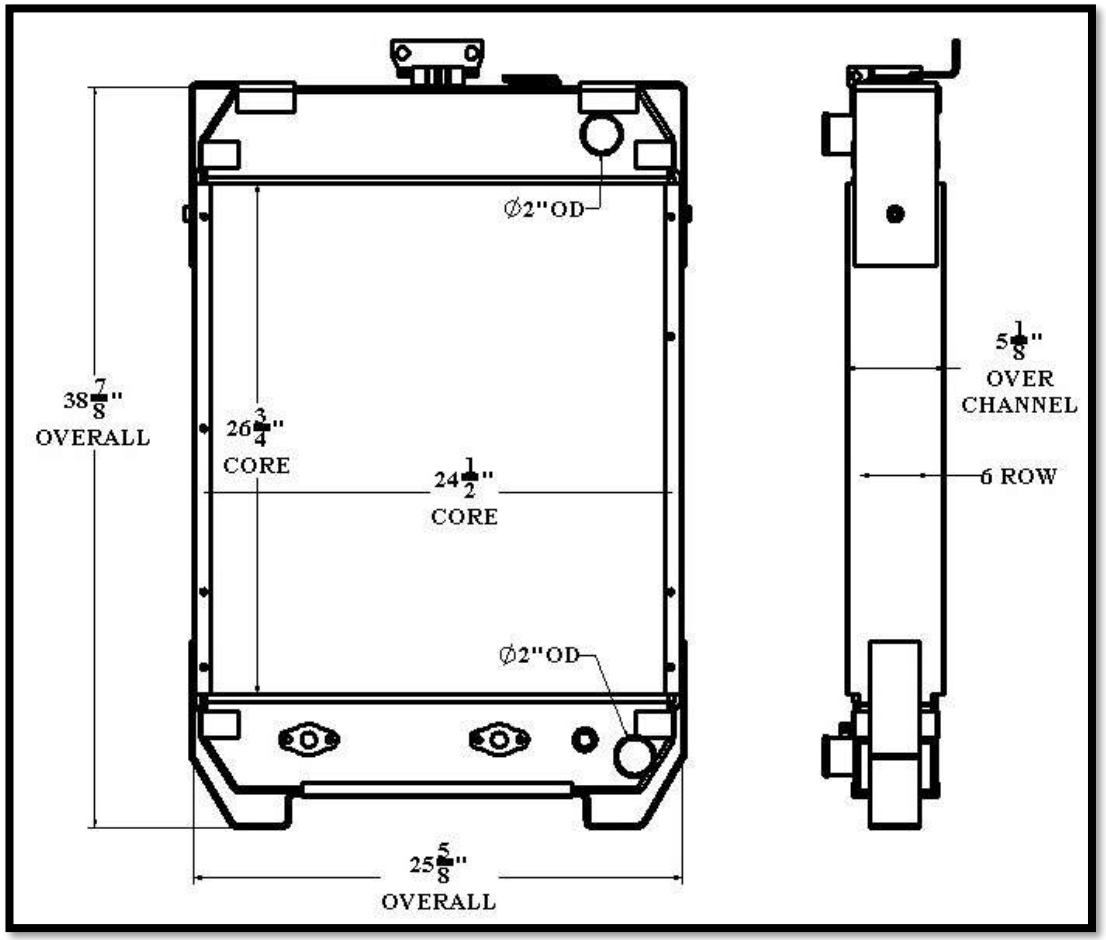

Overall Dimensions: 38-7/8” X 25-5/8” X 5-1/8”
Core: 26-3/4” X 24-1/2” X 6 ROW
Inlet: 2”OD
Outlet: 2”OD

Tel 1.800.774.2168
www.bgrradiator.com

BGR Part Number: ST-0632-4M-NC
1A16528, 030795, RE50468

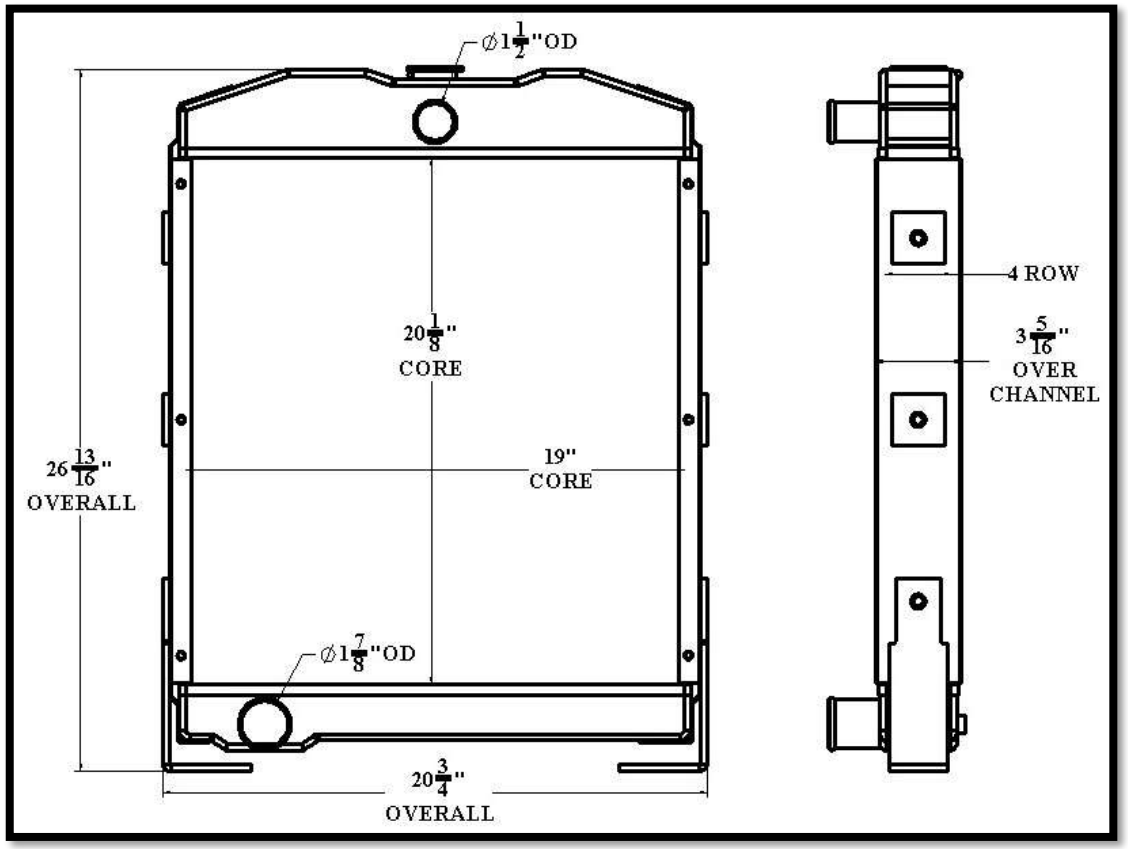

Overall Dimensions: 26-13/16” X 20-3/4” X 3-5/16”
Core: 20-1/8” X 19” X 4 ROW
Inlet: 2-1/2”OD
Outlet: 1-7/8”OD

ST631

Listed dimensions may vary slightly from OE

ST632

BGR Part Number: ST-0633-6M-B

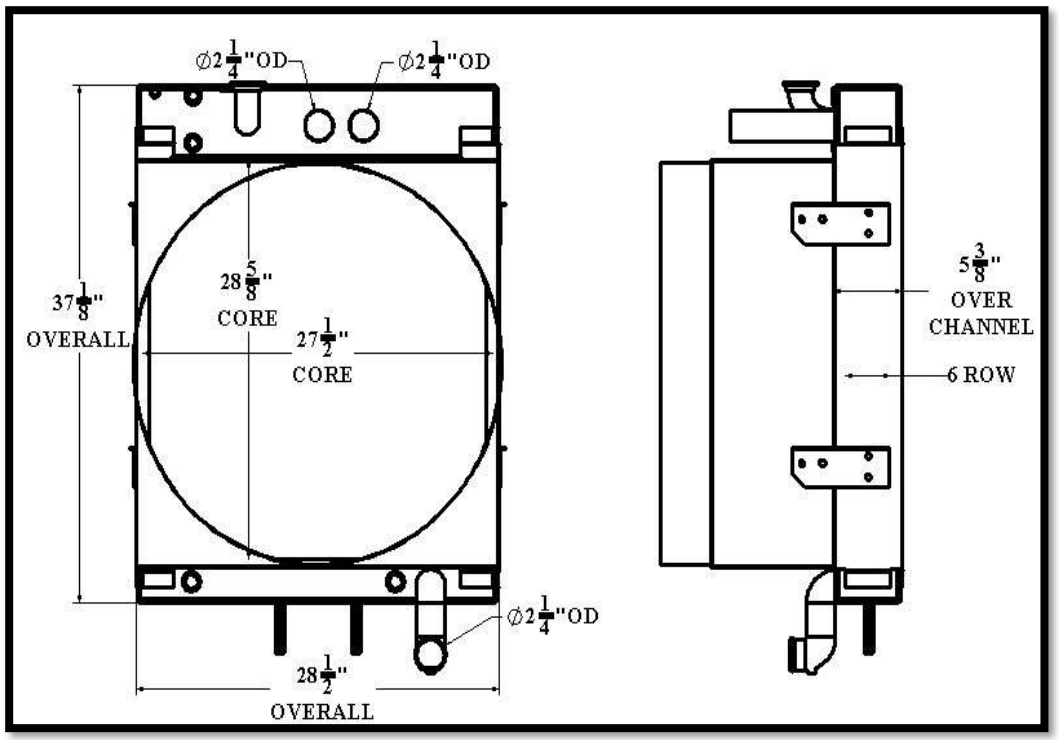

Overall Dimensions: 37-1/8” X 28-1/2” X 5-3/8”
Core: 28-5/8” X 27-1/2” X 6 ROW
Inlet: 2-1/4”OD, 2PL
Outlet: 2-1/4”OD

ST633

Tel 1.800.774.2168
www.bgrradiator.com
BGR RADIATOR

BGR Part Number: ST-0634-6M-B
S037449-3

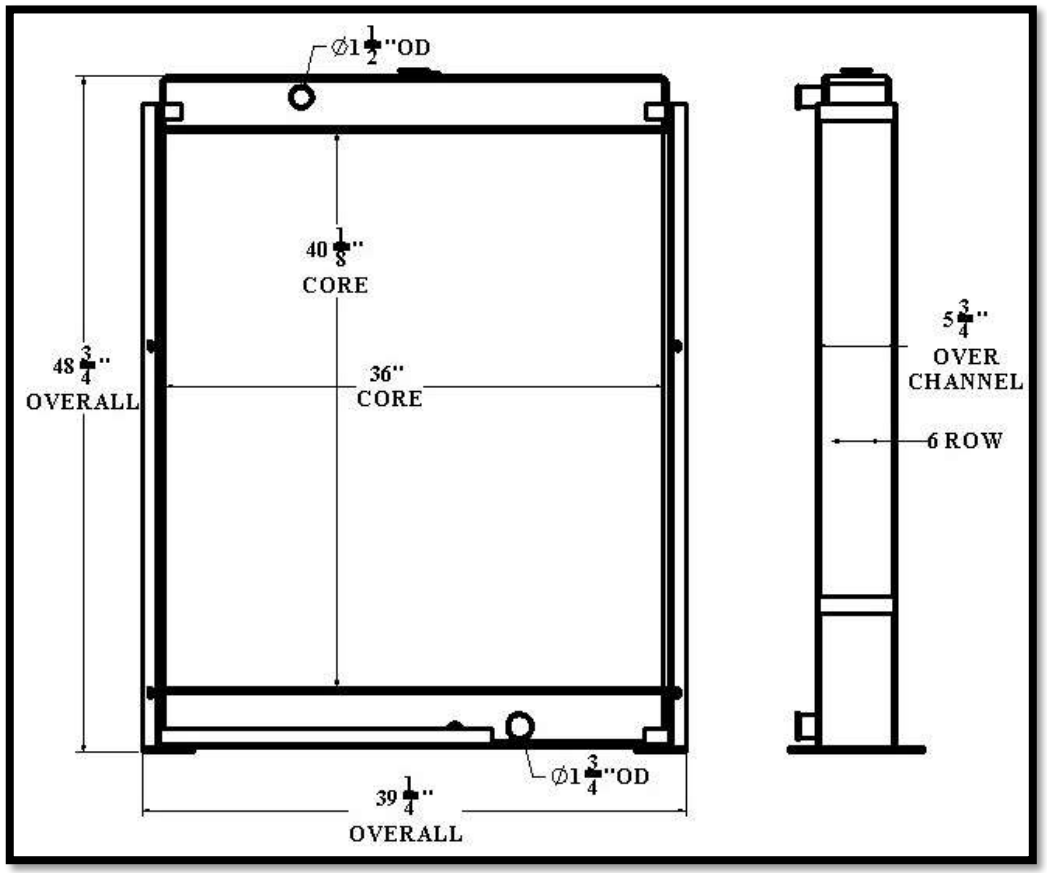

Overall Dimensions: 48-3/4” X 39-1/4” X 5-3/4”
Core: 40-1/8” X 36” X 6 ROW
Inlet: 1-1/2”OD
Outlet: 1-3/4”OD

ST634

Listed dimensions may vary slightly from OE

BGR Part Number: ST-0635-3M-F
0G1219, 150.1301.100-2

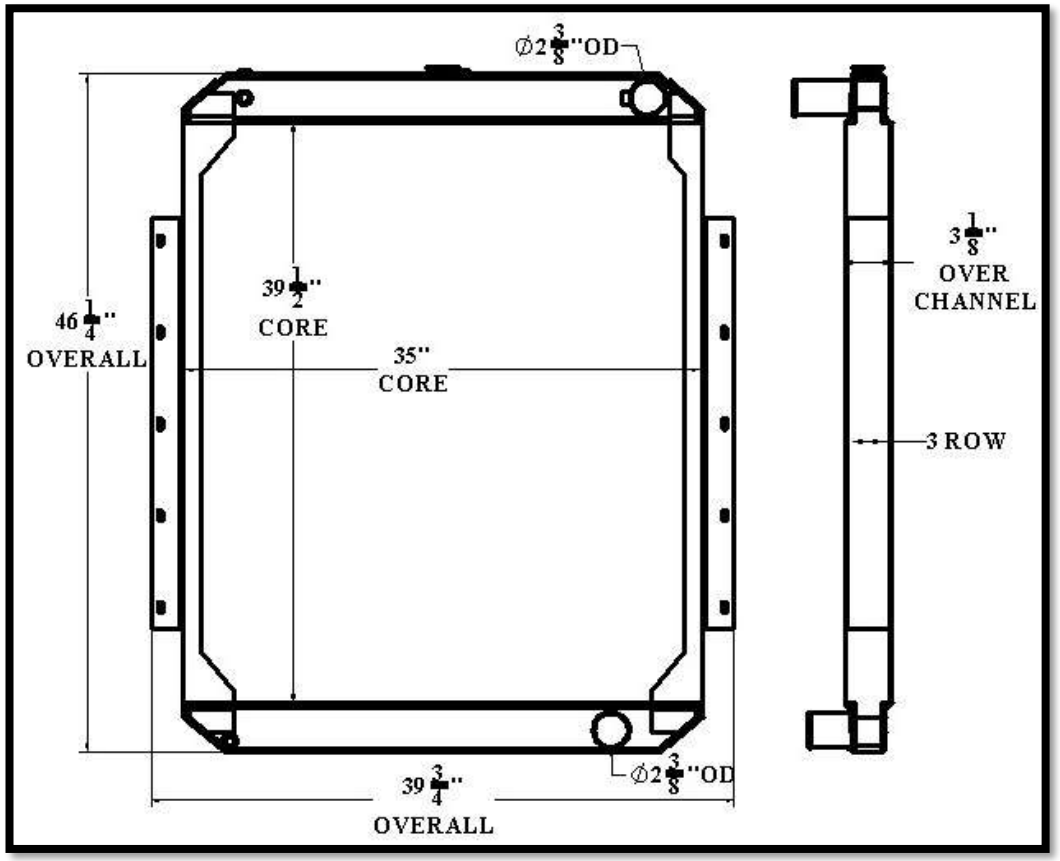

Overall Dimensions: 46-1/4” X 39-3/4” X 3-1/8”
Core: 39-1/2” X 35” X 3 ROW
Inlet: 2-3/8”OD
Outlet: 2-3/8”OD

Tel 1.800.774.2168
www.bgrradiator.com

BGR Part Number: ST-0636-4M-EF
1450-064-0001

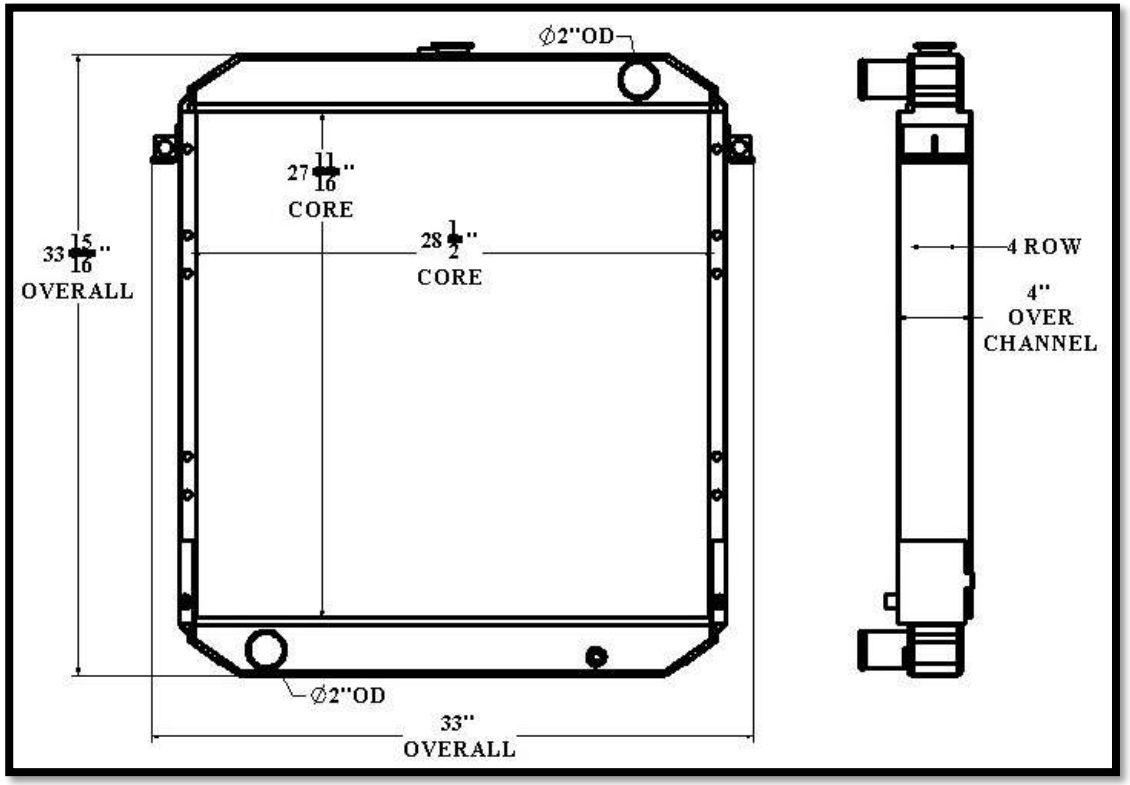

Overall Dimensions: 33-15/16” X 33” X 4”
Core: 27-11/16” X 28-1/2” X 4 ROW
Inlet: 2”OD
Outlet: 2”OD

ST635

Listed dimensions may vary slightly from OE

ST636

BGR Part Number: ST-0637-5M-NC

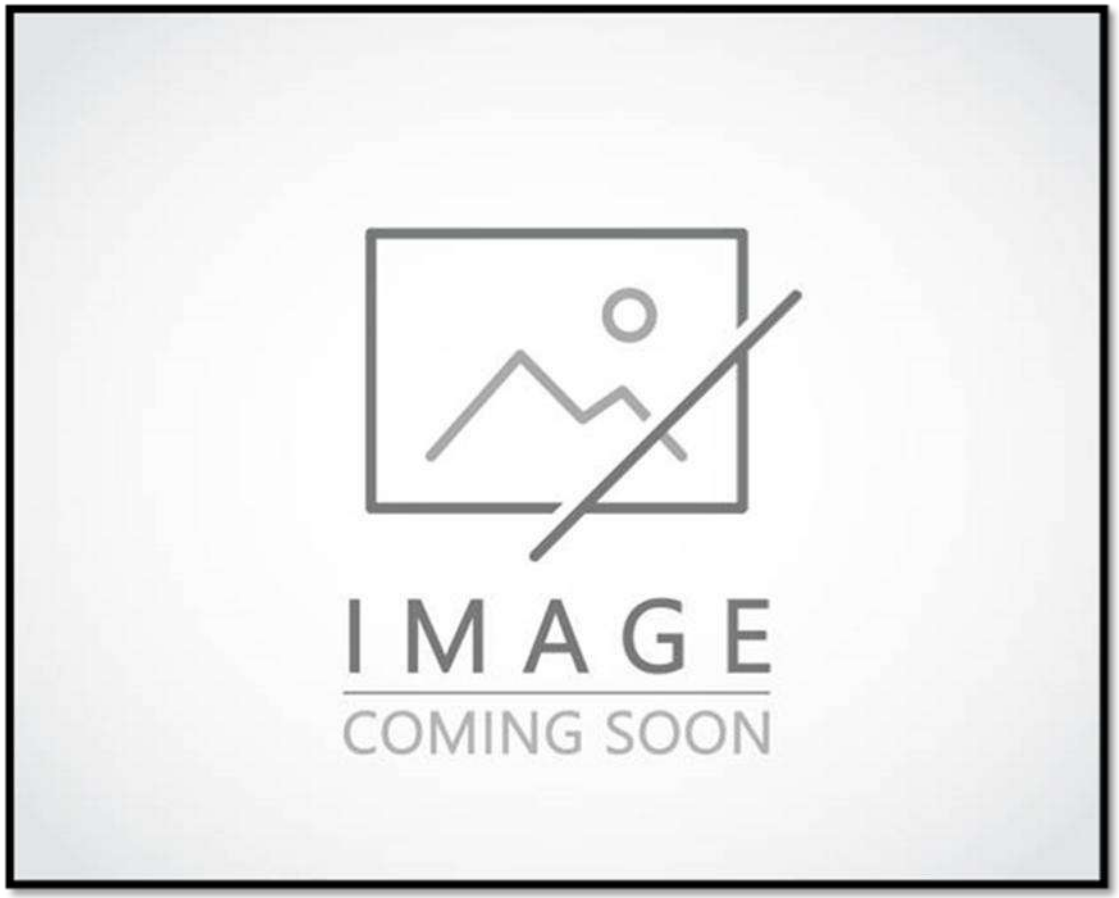

Overall Dimensions:
Core:
Inlet:
Outlet:

ST637

Tel 1.800.774.2168
www.bgrradiator.com

BGR Part Number: ST-0638-4M-NC

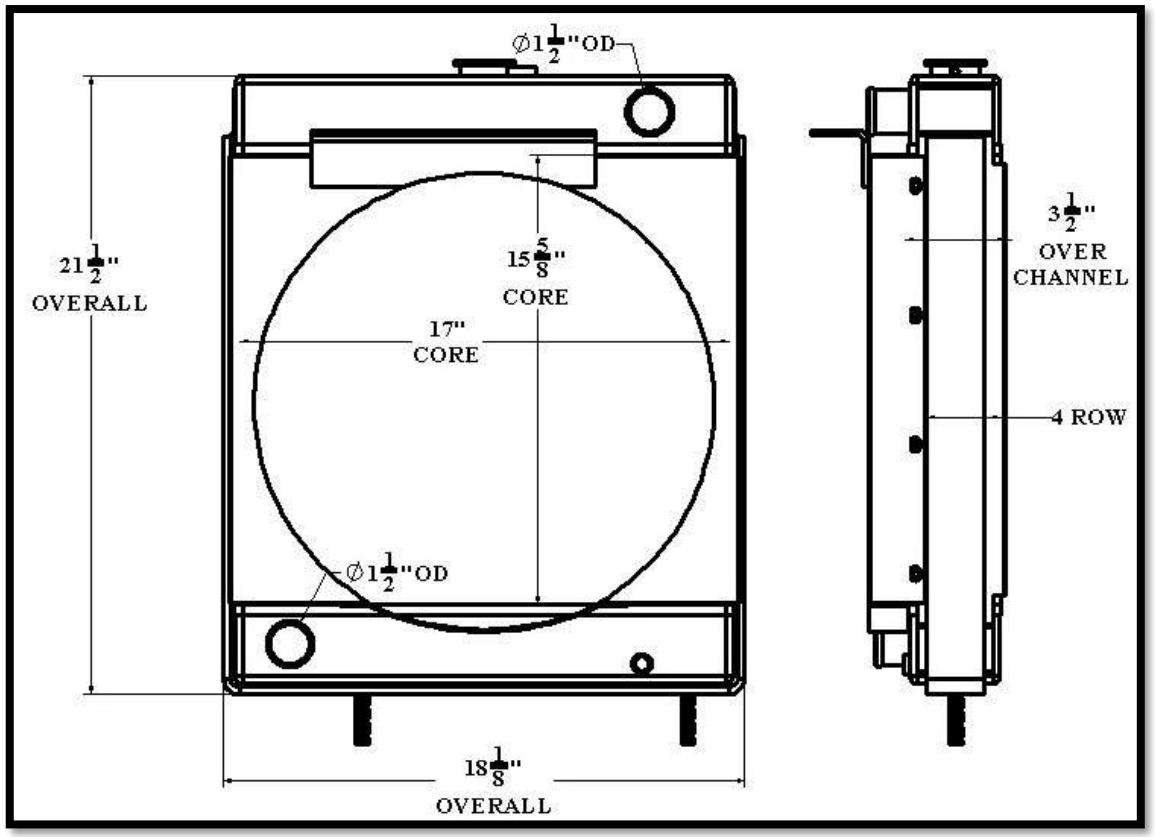

Overall Dimensions: 21-1/2” X 18-1/8” X 3-1/2”
Core: 15-5/8” X 17” X 4 ROW
Inlet: 1-1/2”OD
Outlet: 1-1/2”OD

ST638

Listed dimensions may vary slightly from OE

BGR Part Number: ST-0639-4M-EF

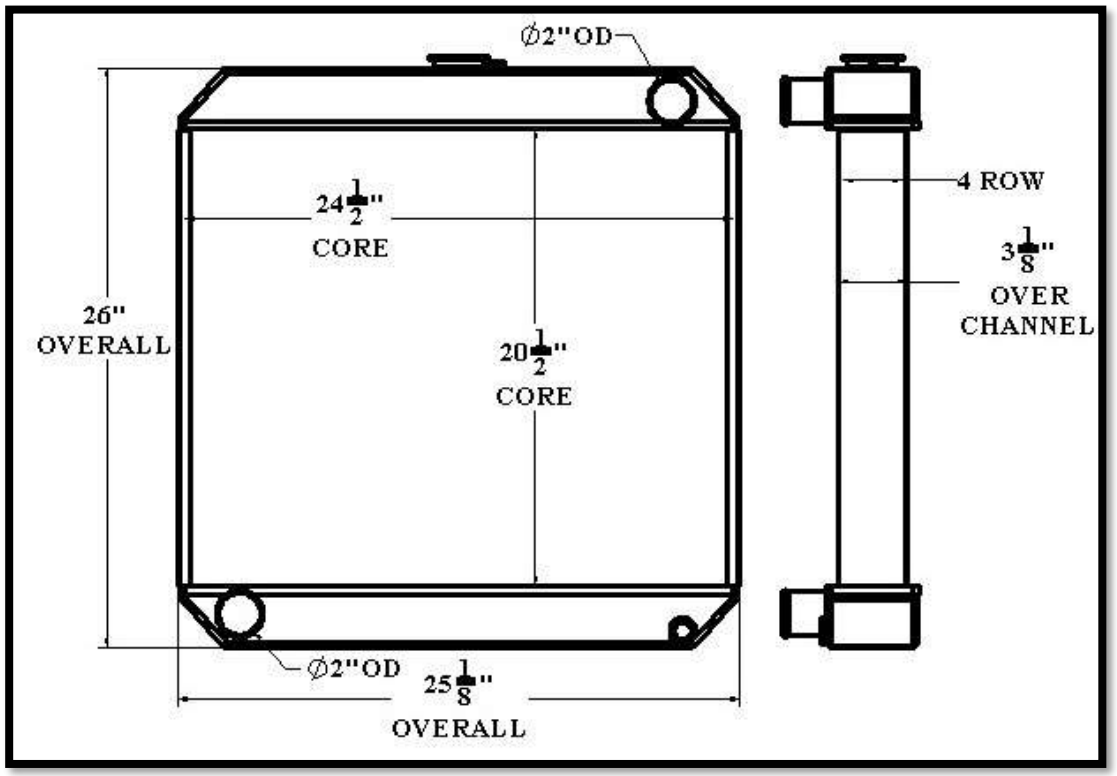

Overall Dimensions: 26” X 25-1/8” X 3-1/8”
Core: 20-1/2” X 24-1/2” X 4 ROW
Inlet: 2”OD
Outlet: 2”OD

Tel 1.800.774.2168
www.bgrradiator.com

BGR Part Number: ST-0640-4M-NC

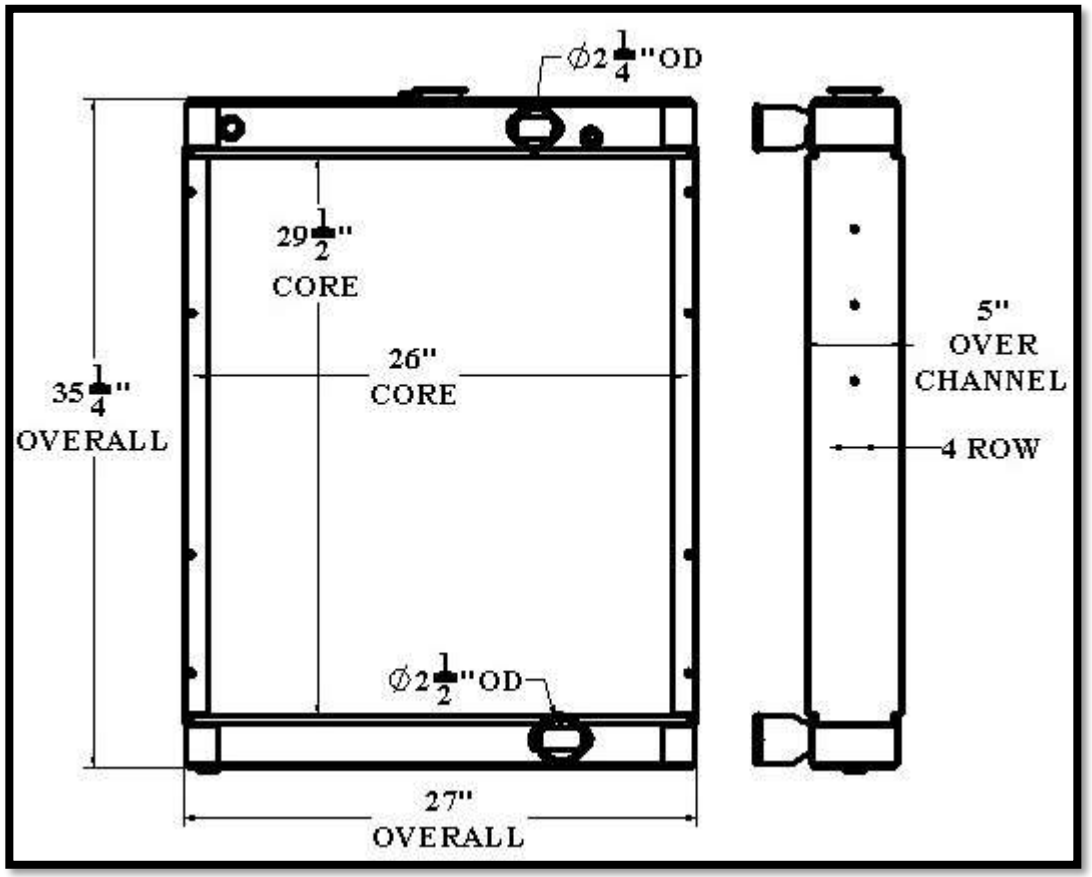

Overall Dimensions: 35-1/4” X 27” X 5”
Core: 29-1/2” X 26” X 4 ROW
Inlet: 2-1/4”OD
Outlet: 2-1/2”OD

ST639

Listed dimensions may vary slightly from OE

ST640

BGR Part Number: ST-0641-5M-NC
MRR424733

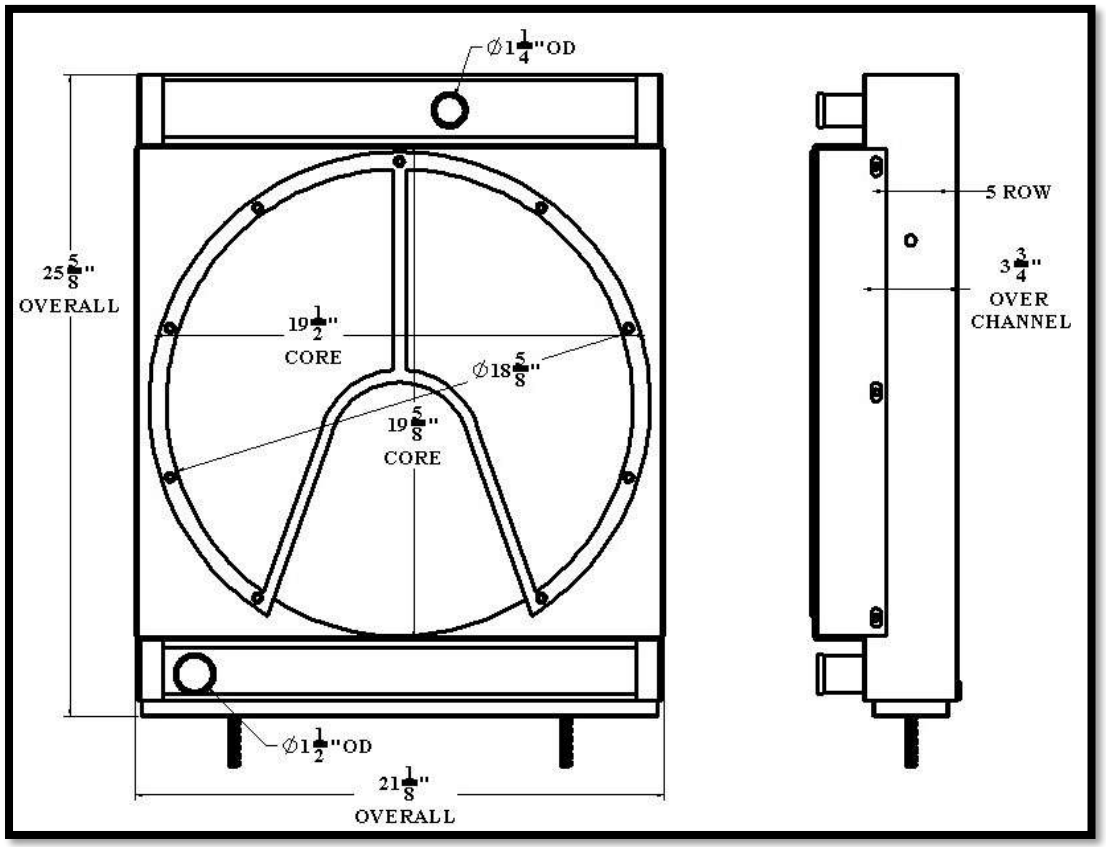

Overall Dimensions: 25-5/8” X 21-1/8” X 3-3/4”
Core: 19-5/8” X 19-1/2” X 5 ROW
Inlet: 1-1/4”OD
Outlet: 1-1/2”OD

Tel 1.800.774.2168
www.bgrradiator.com

BGR Part Number: ST-0642-6M-NC

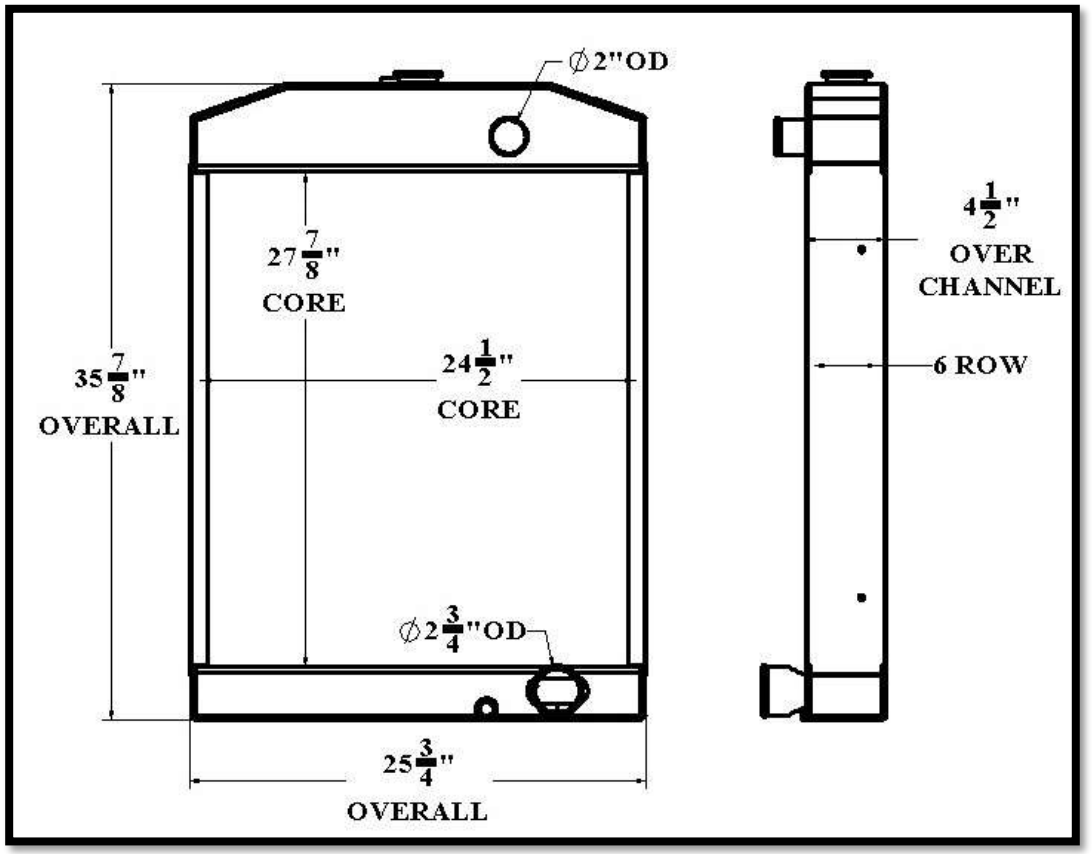

Overall Dimensions: 35-7/8” X 25-3/4” X 4-1/2”
Core: 27-7/8” X 24-1/2” X 6 ROW
Inlet: 2”OD
Outlet: 2-3/4”OD

ST641

Listed dimensions may vary slightly from OE

ST642

BGR Part Number: ST-0643-5M-EF

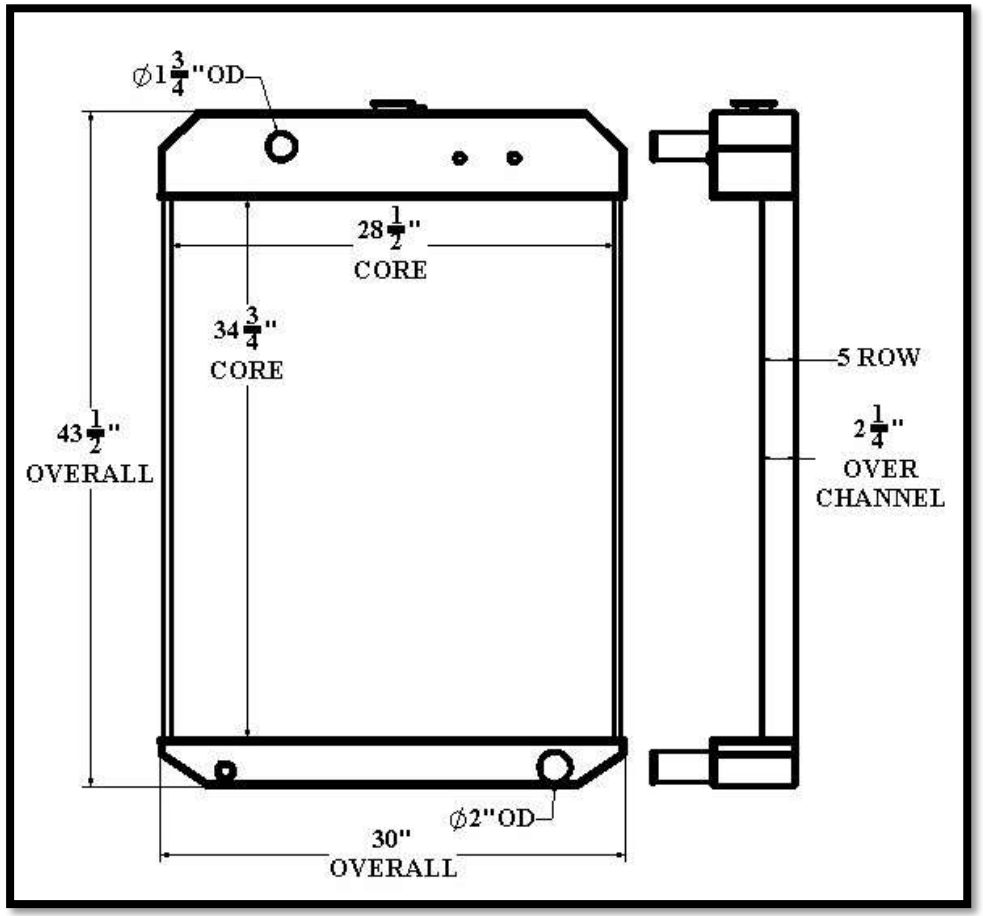

Overall Dimensions: 43-1/2” X 30” X 2-1/4”
Core: 34-3/4” X 28-1/2” X 5 ROW
Inlet: 1-3/4”OD
Outlet: 2”OD

Tel 1.800.774.2168
www.bgrradiator.com

BGR Part Number: ST-0644-5M-F
0D7479

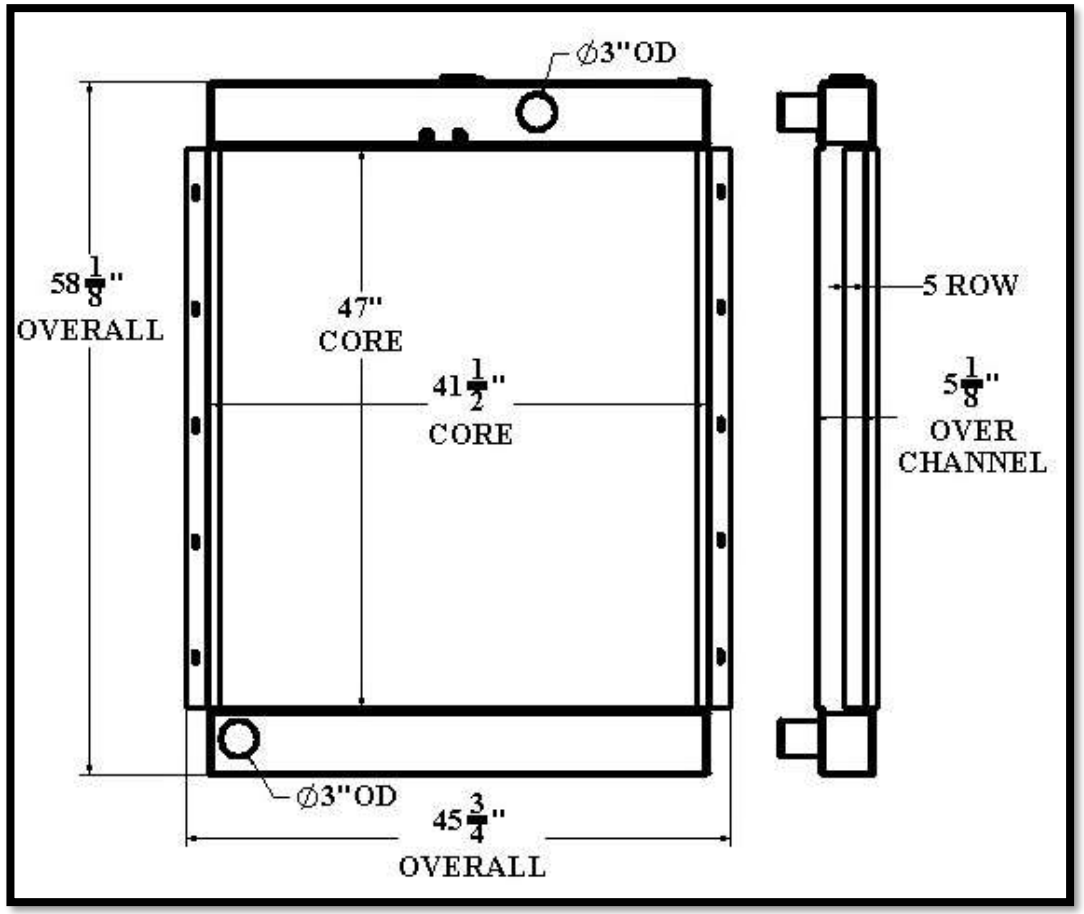

Overall Dimensions:58-1/8” X 45-3/4” X 5-1/8”
Core: 47” X 41-1/2” X 5 ROW
Inlet: 3”OD
Outlet: 3”OD

ST643

Listed dimensions may vary slightly from OE

ST644

BGR Part Number: ST-0645-4M-NC

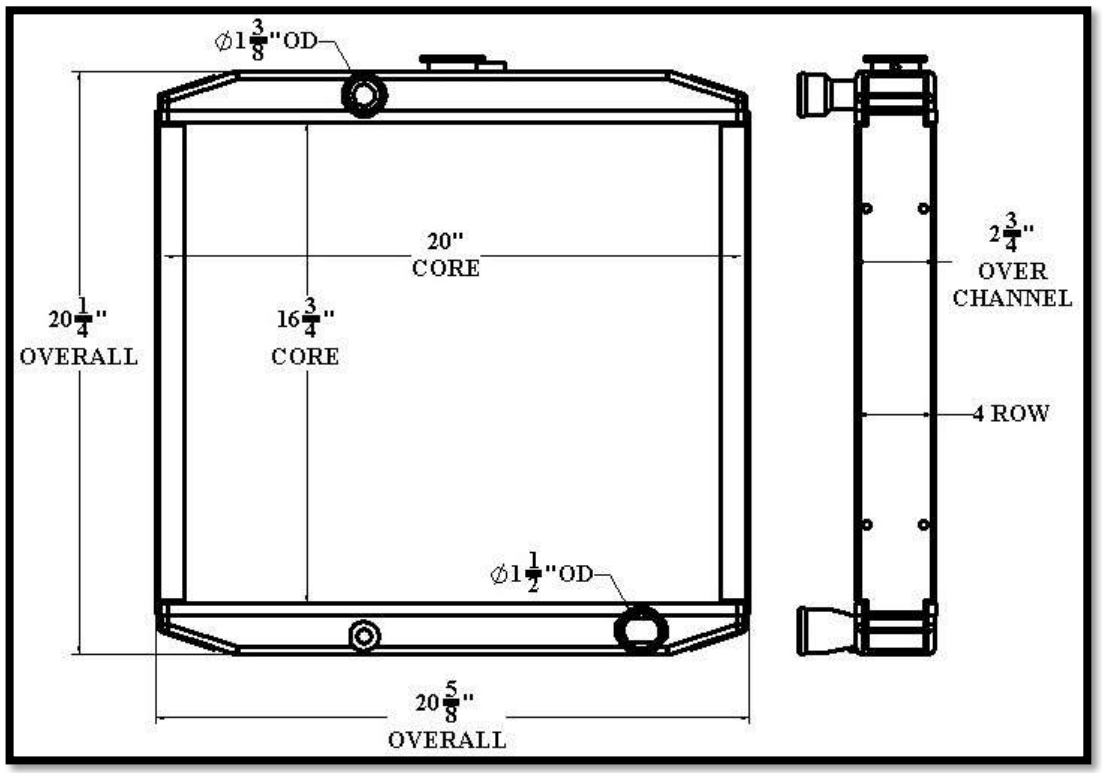

Overall Dimensions: 20-1/4” X 20-5/8” X 2-3/4”
Core: 16-3/4” X 20” X 4 ROW
Inlet: 1-3/8”OD
Outlet: 1-1/2”OD

Tel 1.800.774.2168
www.bgrradiator.com
BGR RADIATOR

BGR Part Number: ST-0646-7M-B
R-7046

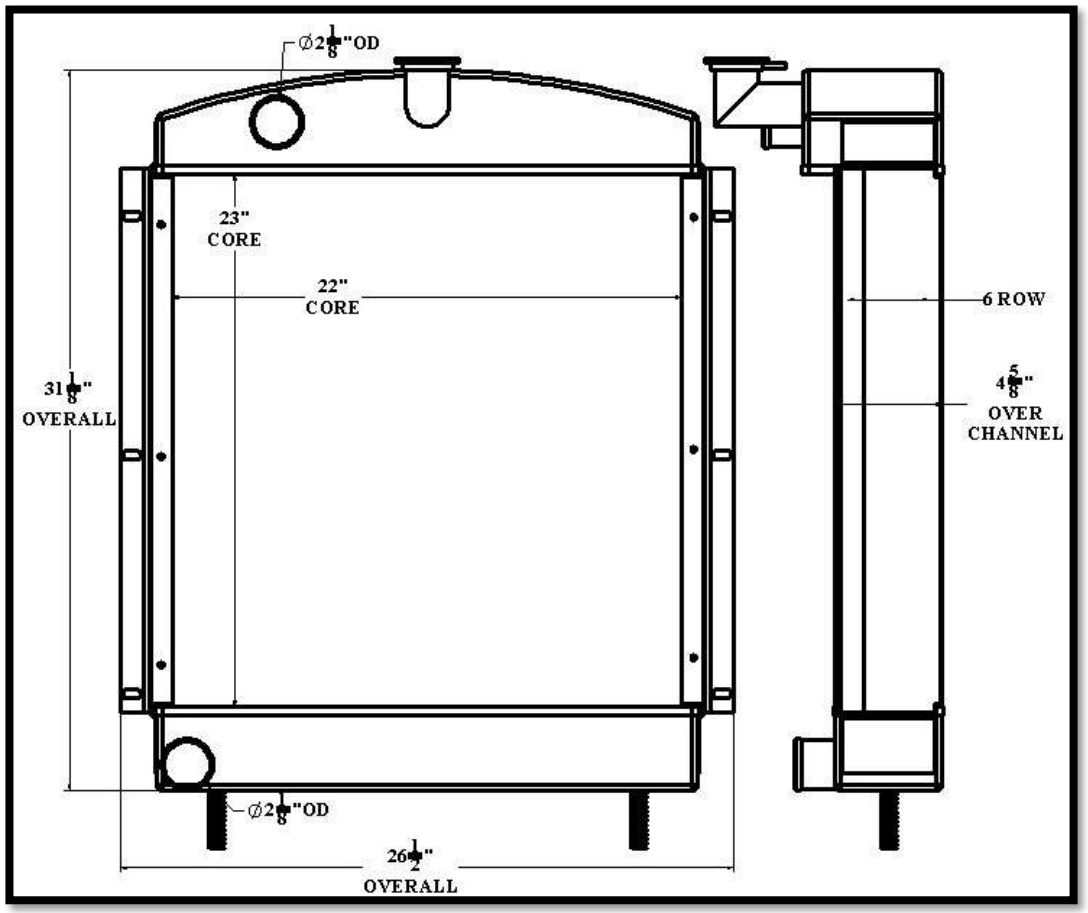

Overall Dimensions: 31-1/8” X 26-1/2” X 4-5/8”
Core: 23” X 22” X 6 ROW
Inlet: 2-1/8”OD
Outlet: 2-1/8”OD

ST645

Listed dimensions may vary slightly from OE

ST646

BGR Part Number: ST-0647-5M-NC

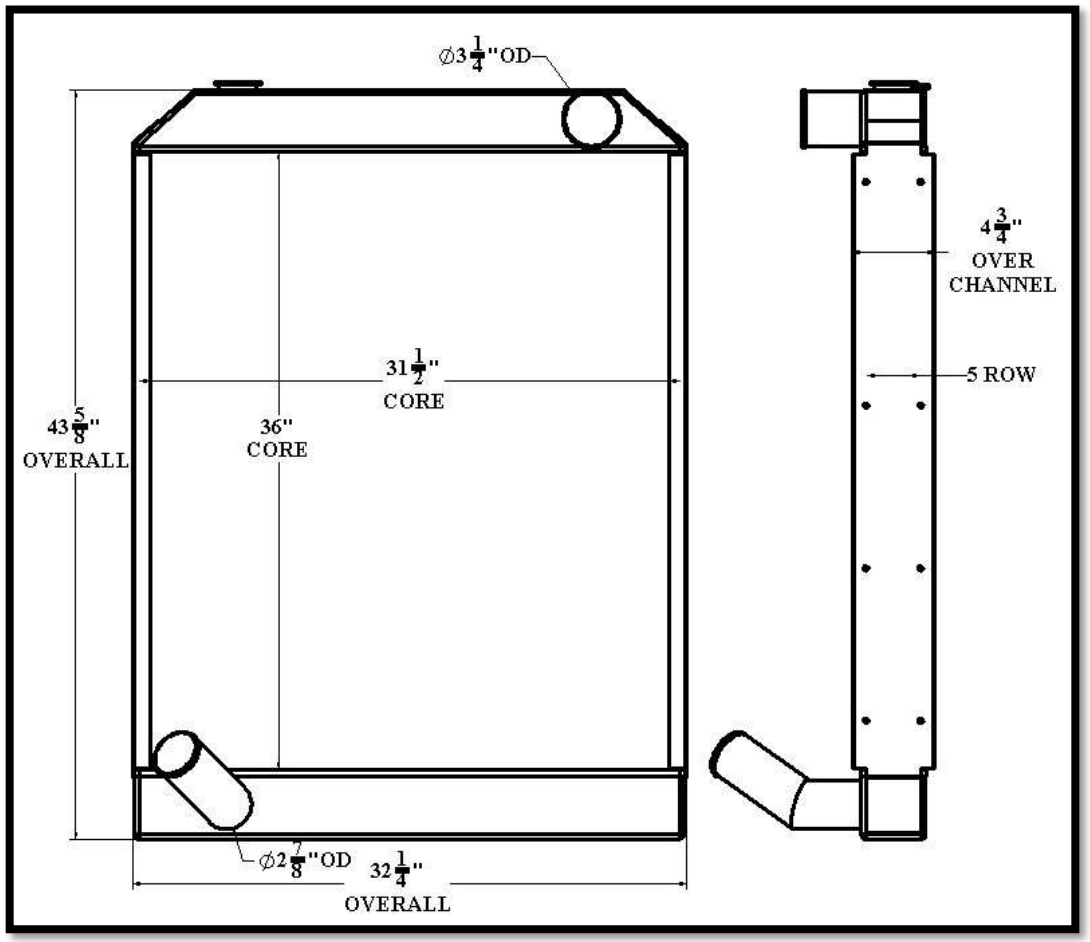

Overall Dimensions: 43-5/8” X 32-1/4” X 4-3/4”
Core: 36” X 31-1/2” X 5 ROW
Inlet: 3-1/4”OD
Outlet: 2-7/8”OD

Tel 1.800.774.2168
www.bgrradiator.com

BGR Part Number: ST-0648-4M-NC
RS-4397 REV A

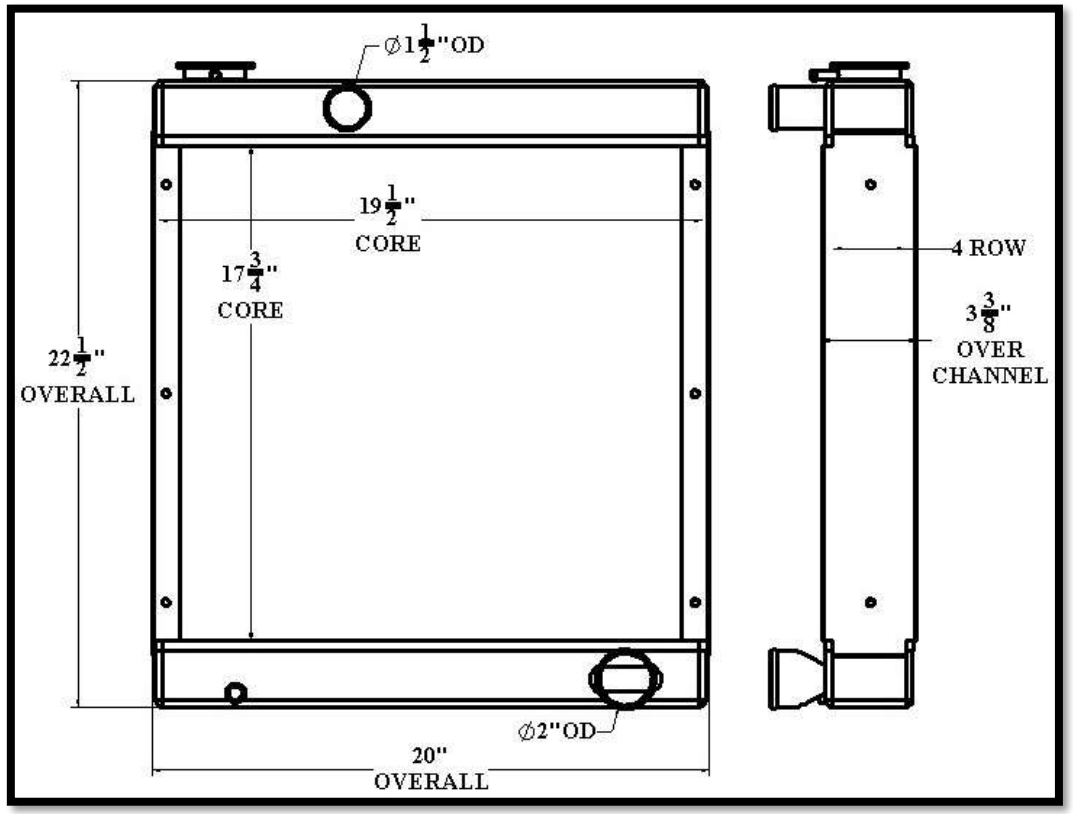

Overall Dimensions: 22-1/2” X 20” X 3-3/8”
Core: 17-3/4” X 19-1/2” X 4 ROW
Inlet: 1-1/2”OD
Outlet: 2”OD

ST647

Listed dimensions may vary slightly from OE

ST648

BGR Part Number: ST-0649-4M-NC
80757, H153786

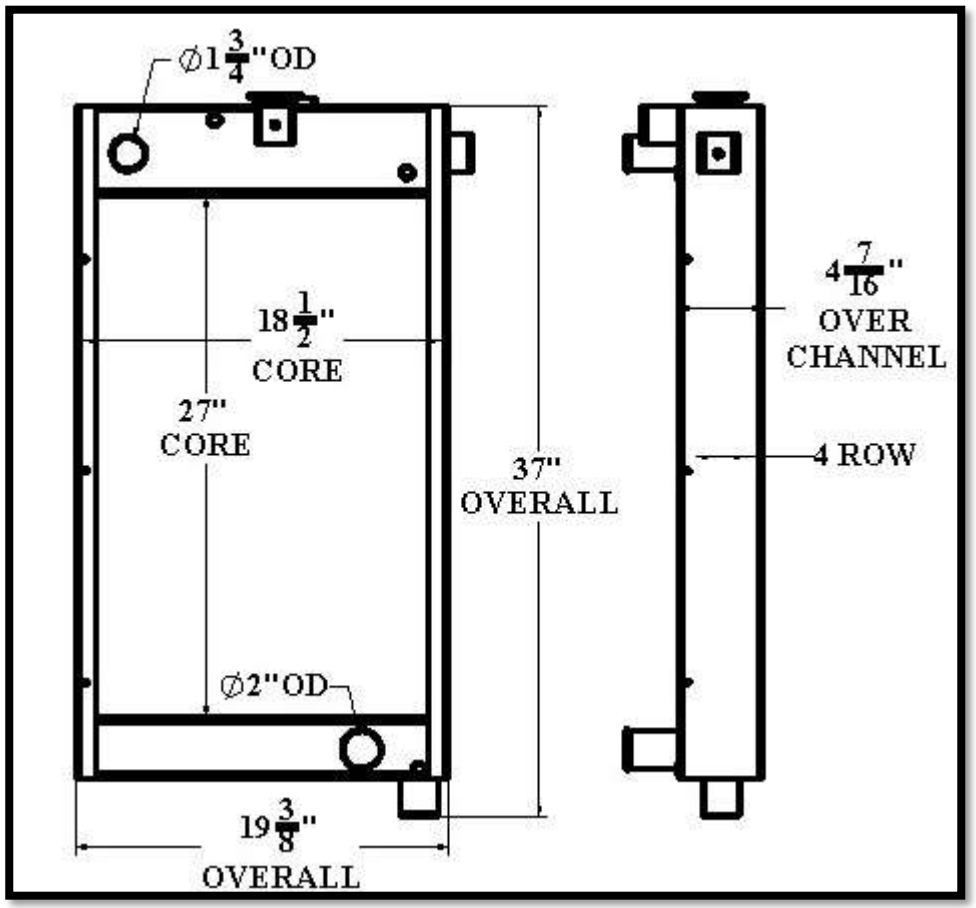

Overall Dimensions: 37” X 19-3/8” X 4-7/16”
Core: 27” X 18-1/2” X 4 ROW
Inlet: 1-3/4”OD
Outlet: 2”OD

Tel 1.800.774.2168
www.bgrradiator.com

BGR Part Number: ST-0650-5M-NC

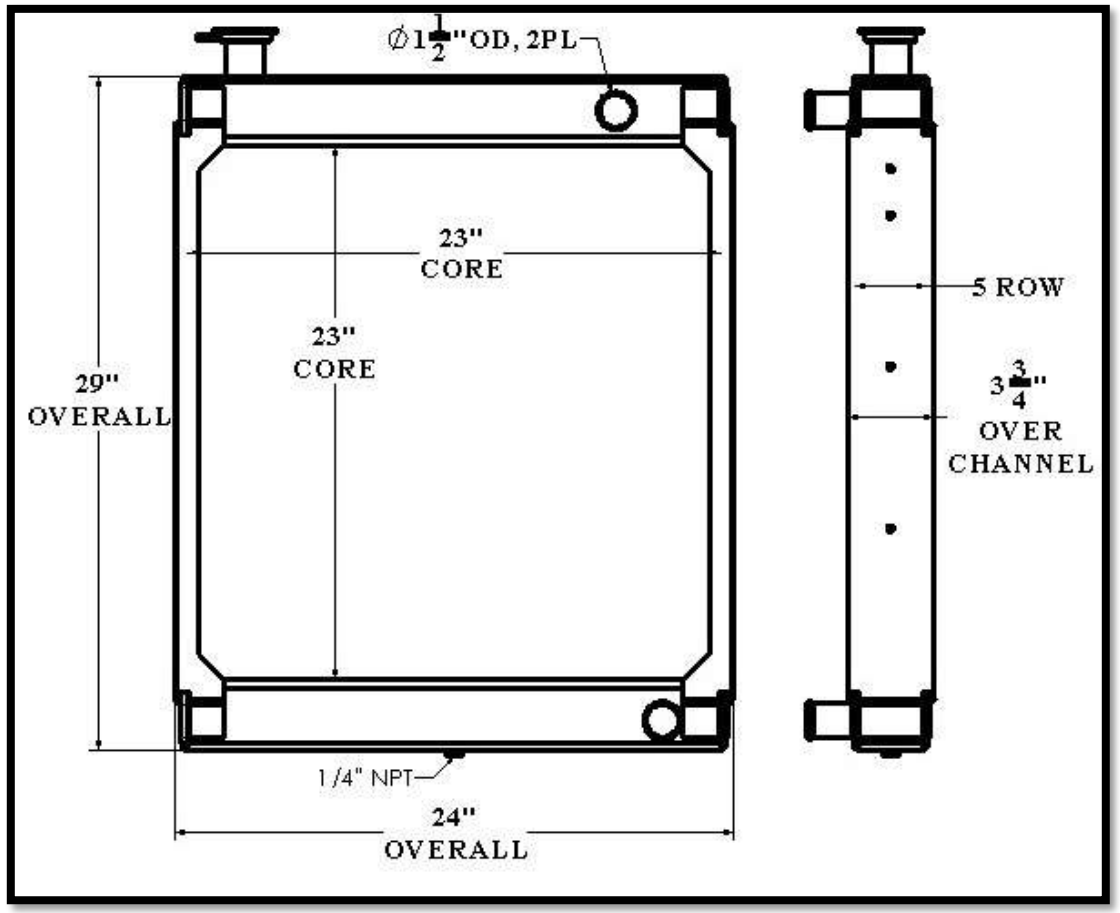

Overall Dimensions: 29” X 24” X 3-3/4”
Core: 23” X 23” X 5 ROW
Inlet: 1-1/2”OD
Outlet: 1-1/2”OD

ST649

Listed dimensions may vary slightly from OE

ST650

BGR Part Number: ST-0651-25-NC
A0003168058

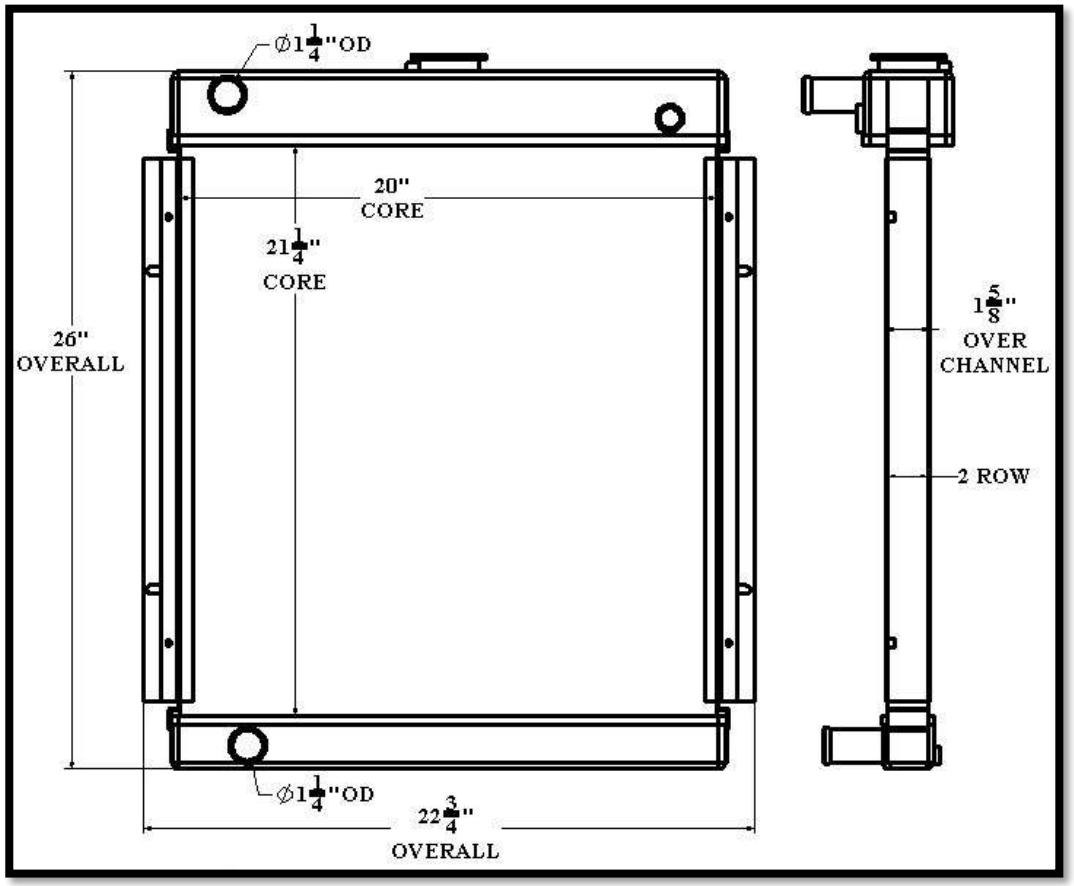

Overall Dimensions: 26” X 22-3/4” X 1-5/8”
Core: 21-1/4” X 20” X 2 ROW
Inlet: 1-1/4”OD
Outlet: 1-1/4”OD

Tel 1.800.774.2168
www.bgrradiator.com

BGR Part Number: ST-0652-2M-NC
185-2255

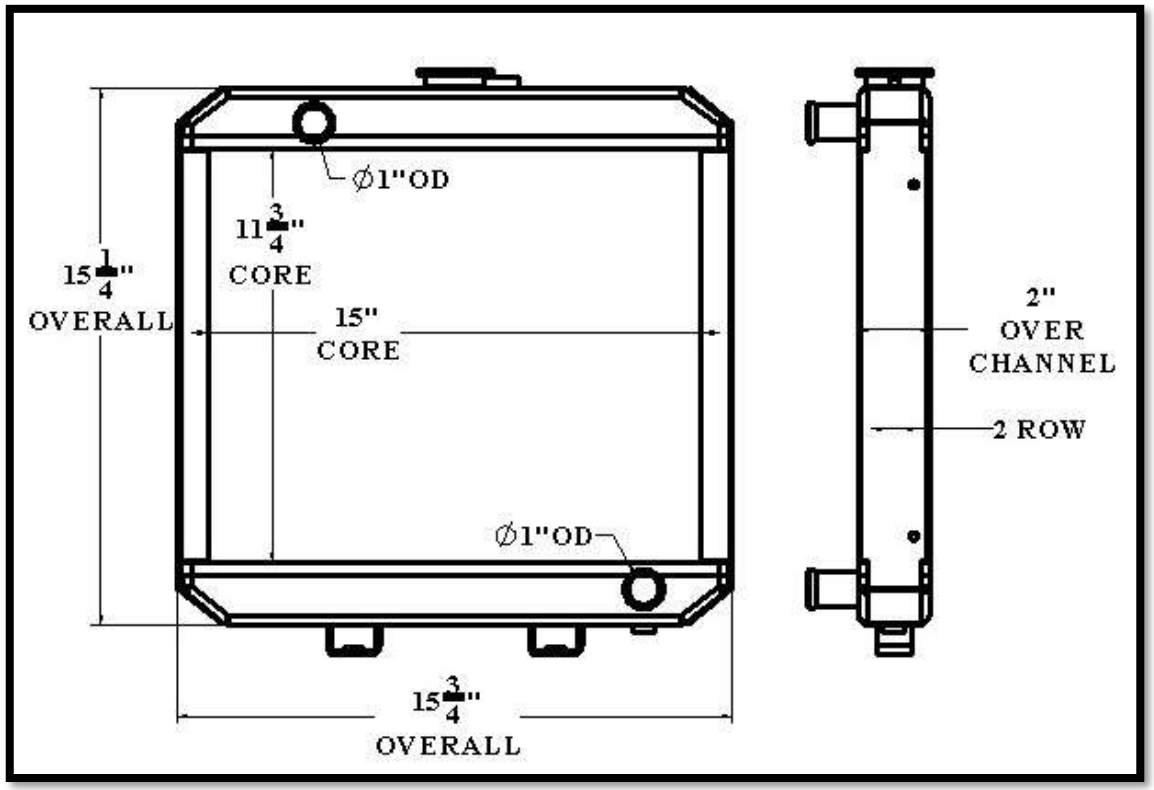

Overall Dimensions: 15-1/4” X 15-3/4” X 2”
Core: 11-3/4” X 15” X 2 ROW
Inlet: 1” OD
Outlet: 1”OD

ST651

Listed dimensions may vary slightly from OE

ST652

BGR Part Number: ST-0653-5M-EF

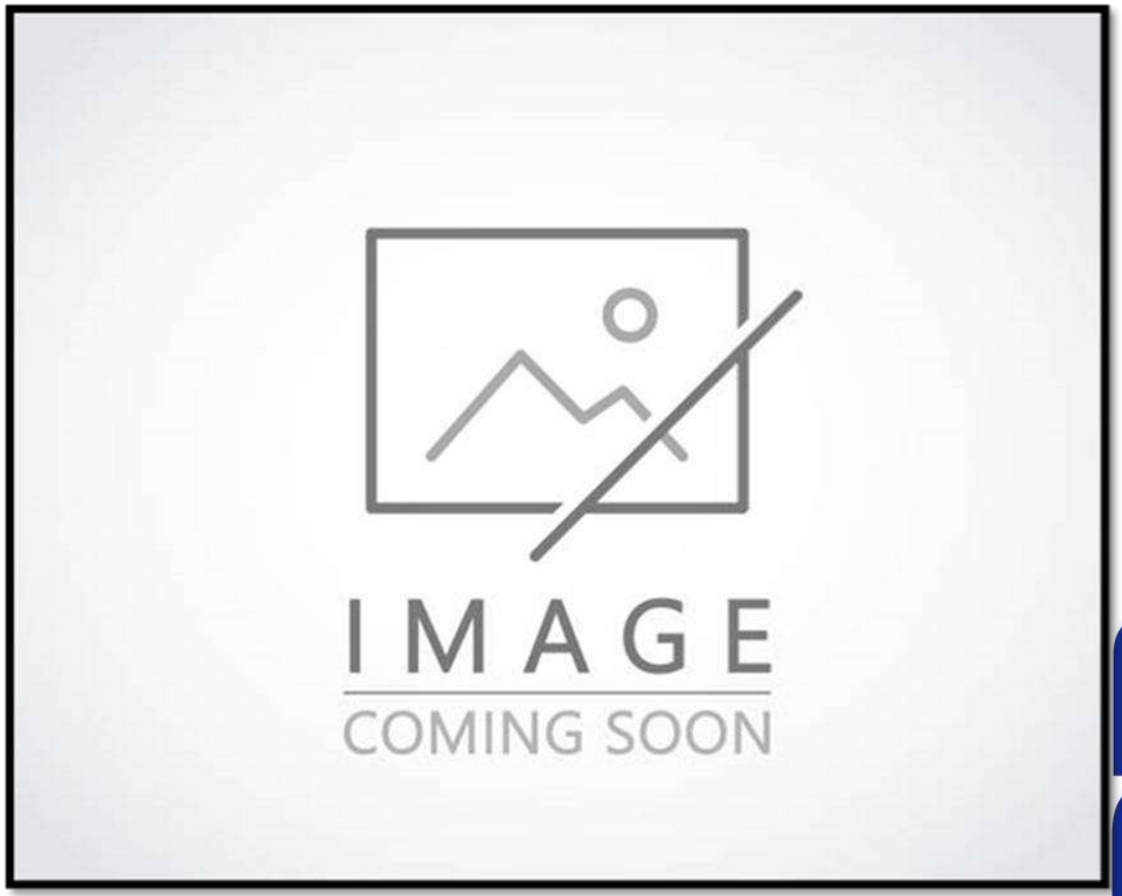

Overall Dimensions:
Core:
Inlet:
Outlet:

Tel 1.800.774.2168
www.bgrradiator.com

BGR Part Number: ST-0654-5M-EF
863062

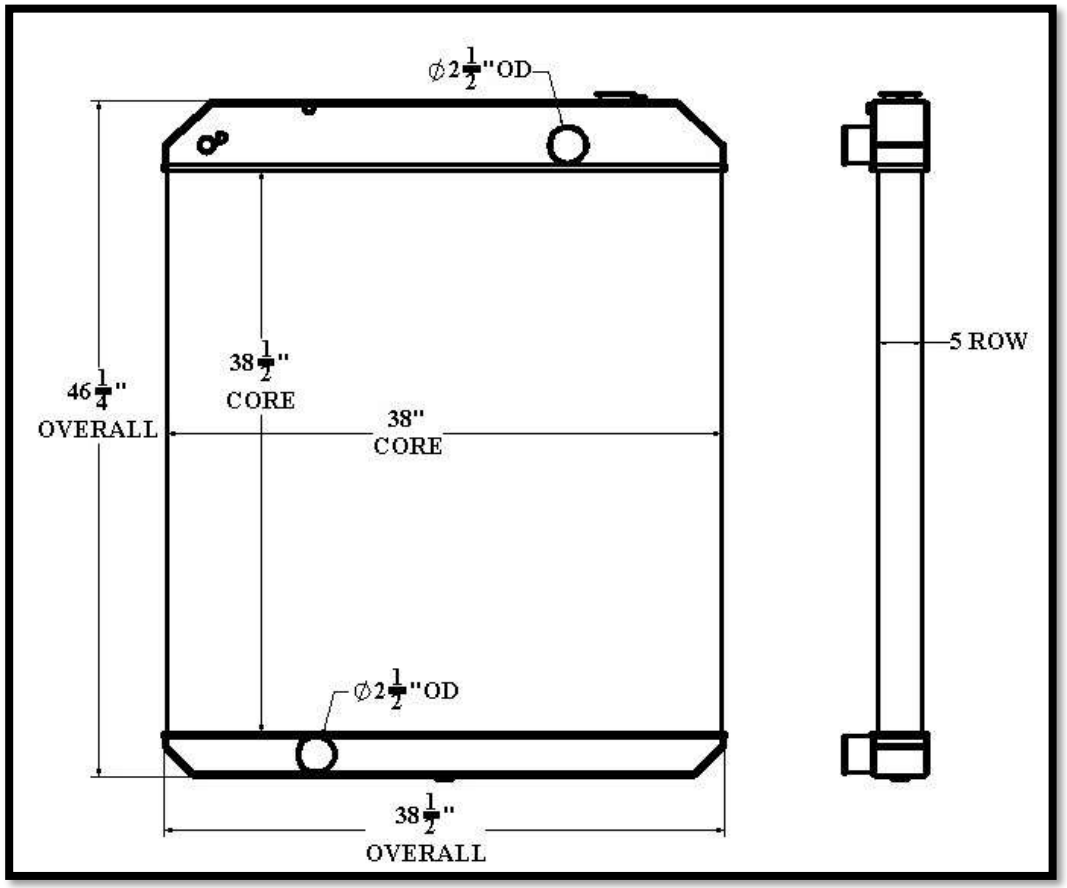

Overall Dimensions: 46-1/4” X 38-1/2”
Core: 38-1/2” X 38” X 5 ROW
Inlet: 2-1/2”OD
Outlet: 2-1/2”OD

ST653

Listed dimensions may vary slightly from OE

ST654

BGR Part Number: ST-0655-6M-F

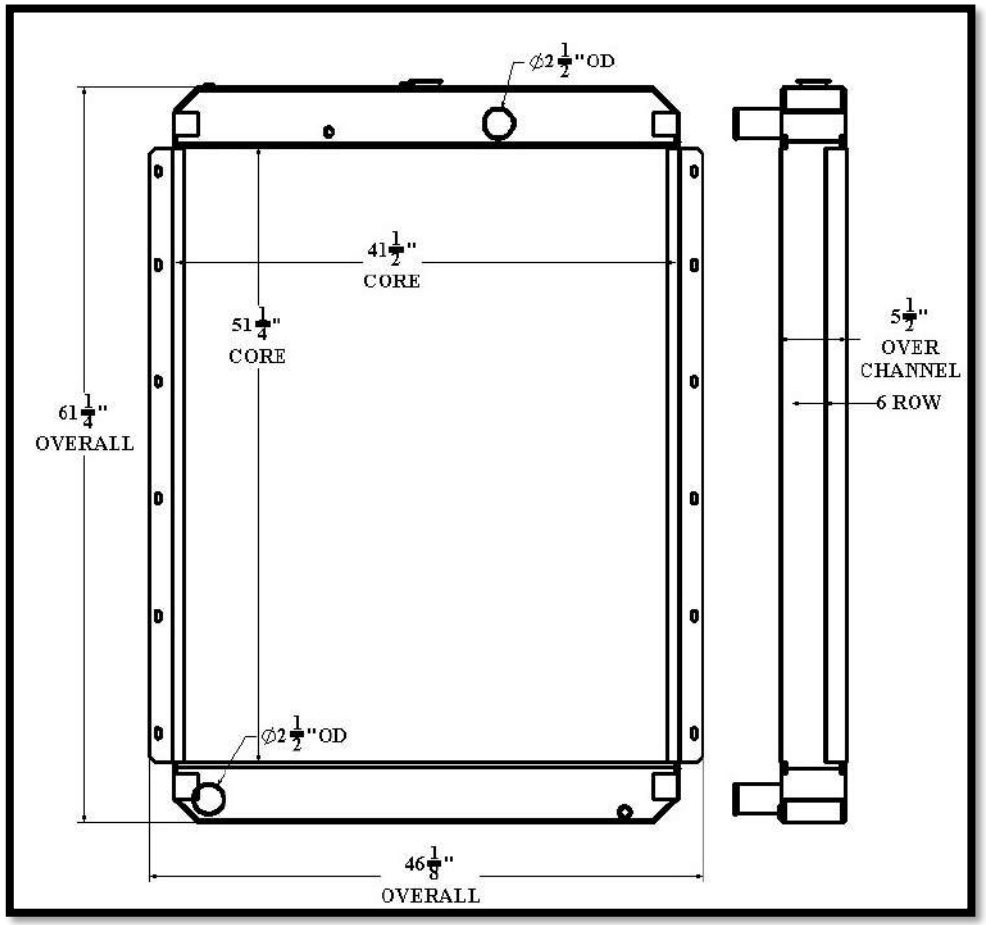

Overall Dimensions: 61-1/4” X 46-1/8” X 5-1/2”
Core: 51-1/4” X 41-1/2” X 6 ROW
Inlet: 2-1/2”OD
Outlet: 2-1/2”OD

Tel 1.800.774.2168
www.bgrradiator.com

BGR Part Number: ST-0656-3M-NC
A-324321

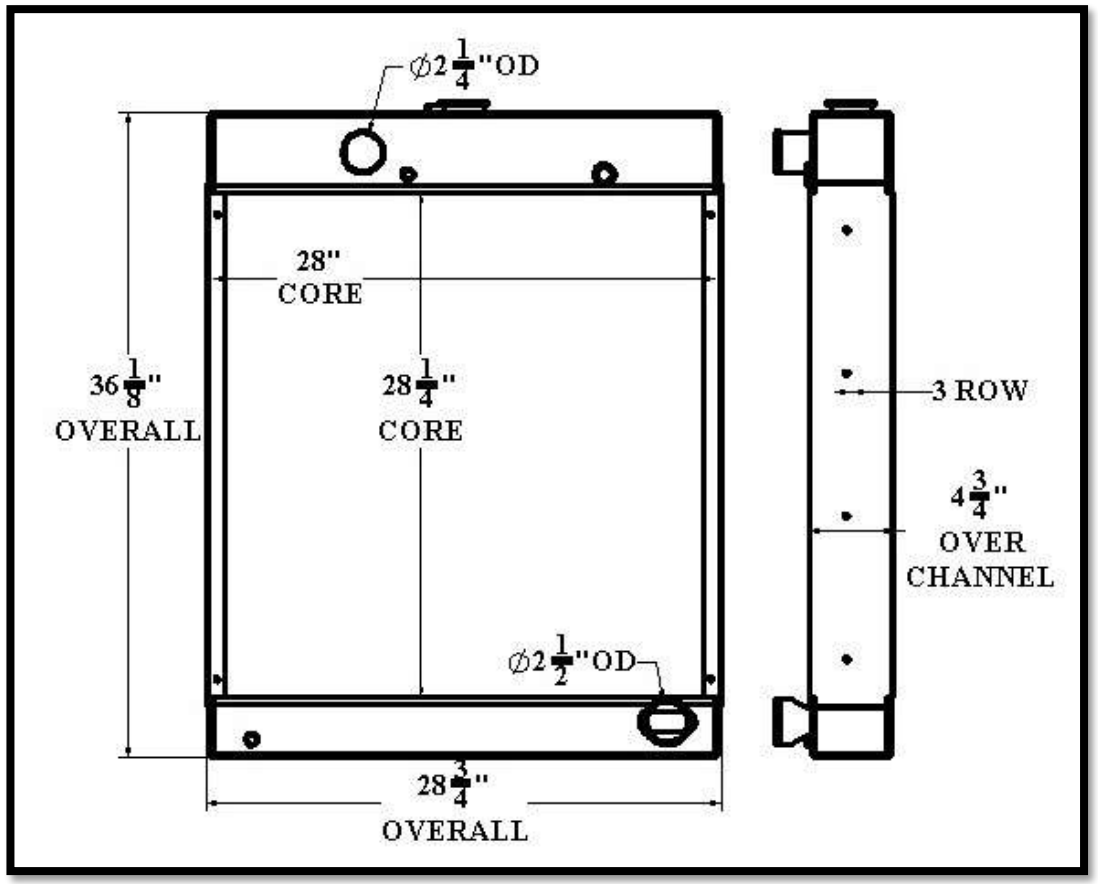

Overall Dimensions: 36-1/8” X 28-3/4” X 4-3/4”
Core: 28-1/4” X 28” X 3 ROW
Inlet: 2-1/4”OD
Outlet: 2-1/2”OD

ST655

Listed dimensions may vary slightly from OE

ST656

BGR Part Number: ST-0657-3M-NC

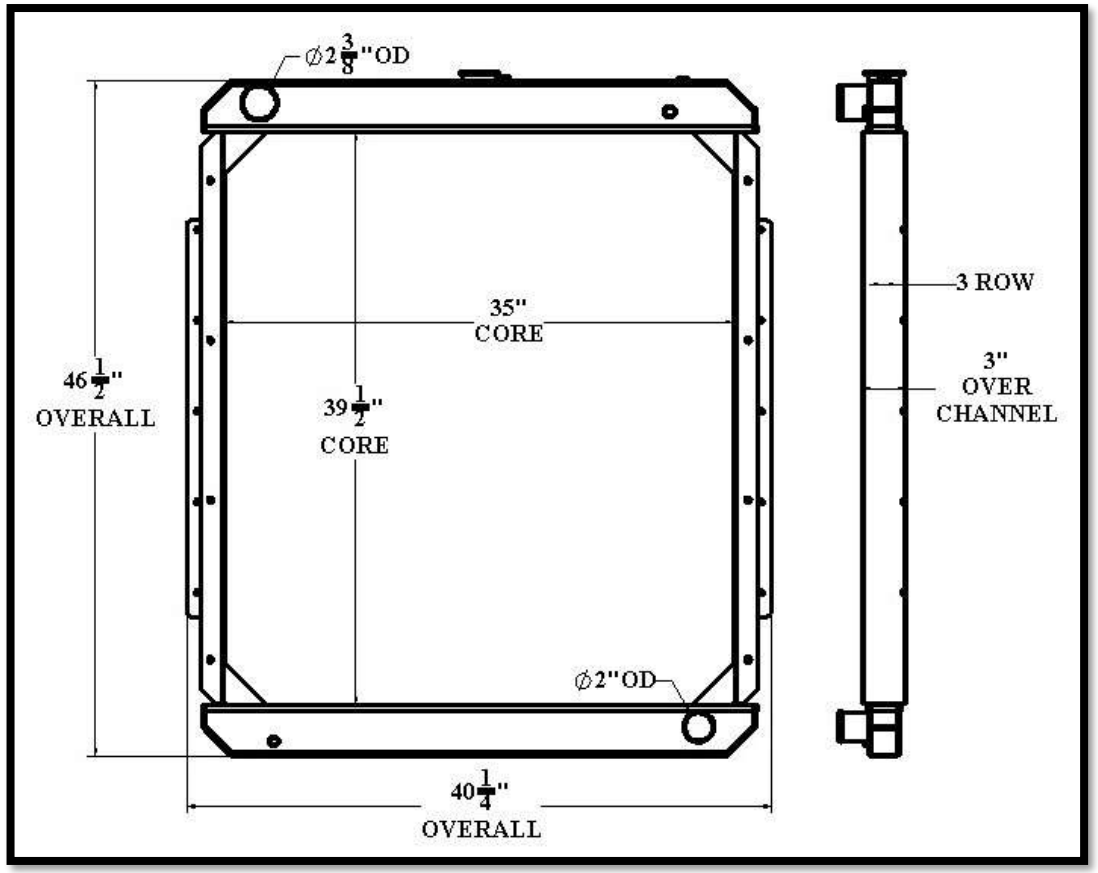

Overall Dimensions: 46-1/2” X 40-1/4” X 3”
Core: 39-1/2” X 35” X 3 ROW
Inlet: 2-3/8”OD
Outlet: 2”OD

ST657

Tel 1.800.774.2168
www.bgrradiator.com

BGR Part Number: ST-0658-2M-NC
14140, 0E9837C

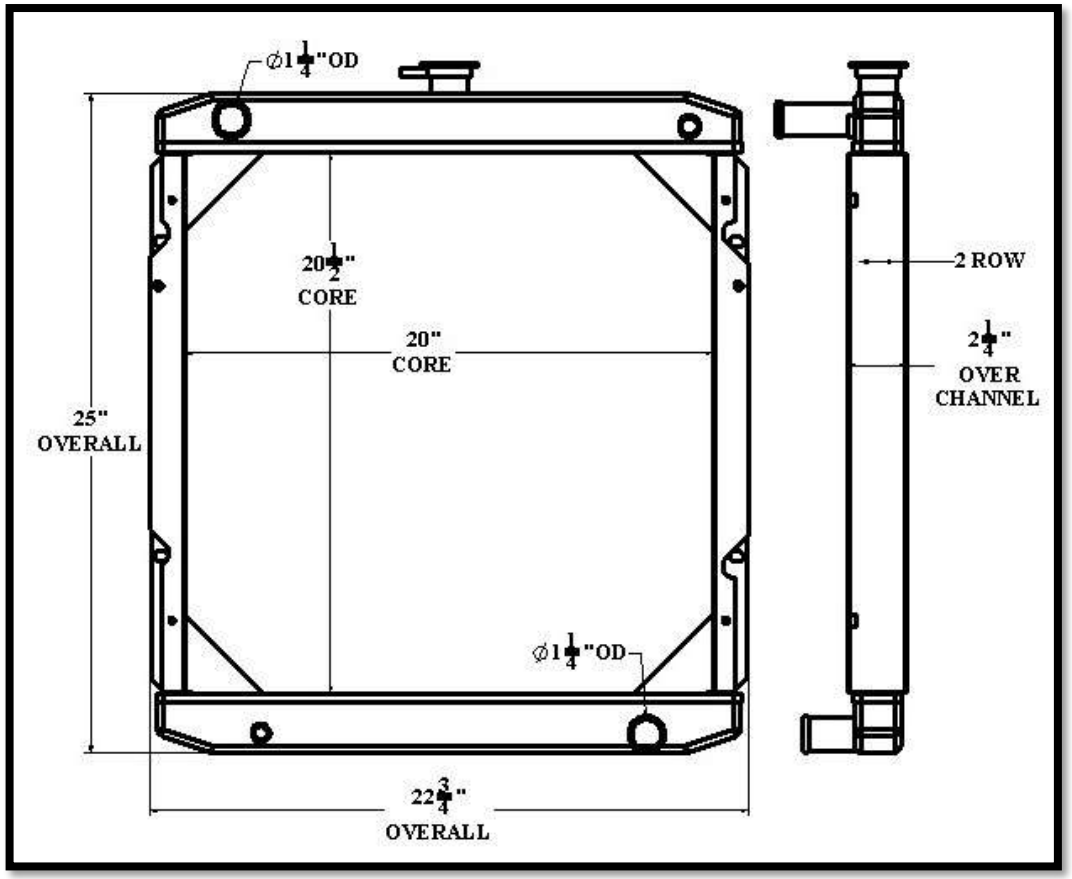

Overall Dimensions:
Core:
Inlet:
Outlet:

ST658

Listed dimensions may vary slightly from OE

BGR Part Number: ST-0659-2M-NC

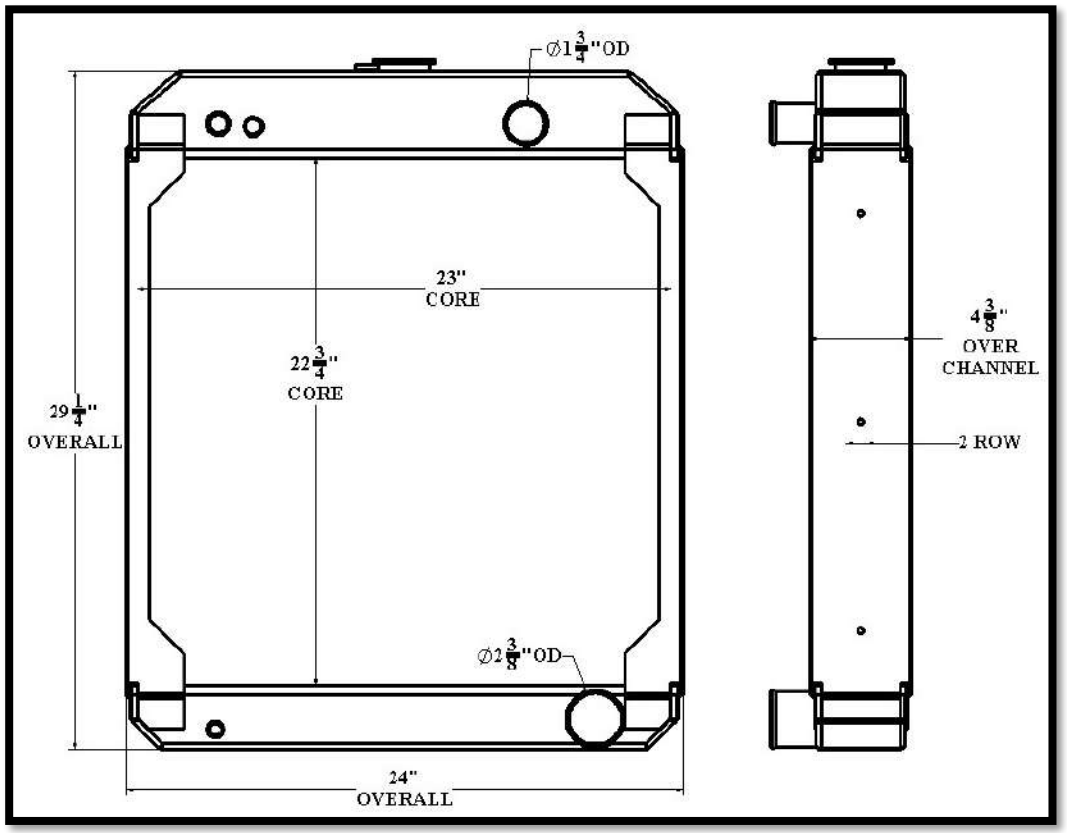

Overall Dimensions: 29-1/4” X 24” X 4-3/8”
Core: 22-3/4” X 23” X 2 ROW
Inlet: 1-3/4”OD
Outlet: 2-3/8”

ST659

Tel 1.800.774.2168
www.bgrradiator.com

BGR Part Number: ST-0660-4M-NC
1A12474, 030391, RE21429

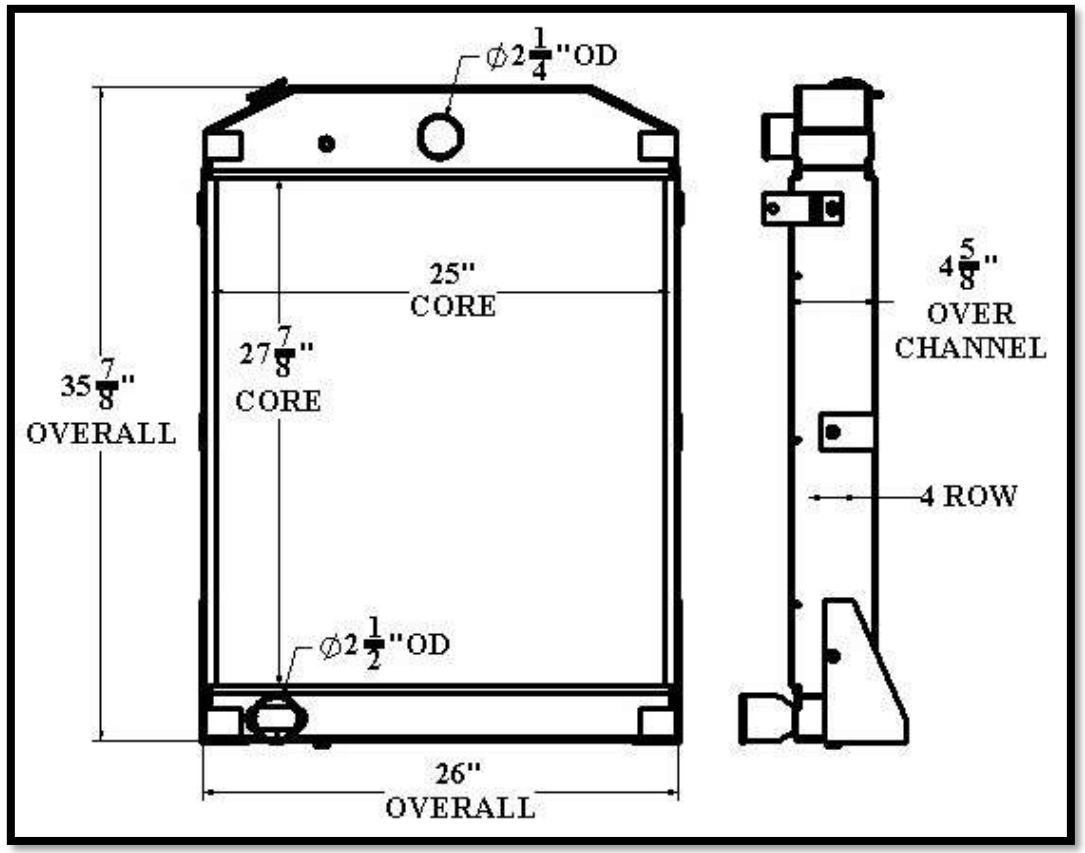

Overall Dimensions: 35-7/8” X 26” X 4-5/8”
Core: 27-7/8” X 25” X 4 ROW
Inlet: 2-1/4”OD
Outlet: 2-1/2”

ST660

Listed dimensions may vary slightly from OE

BGR Part Number: ST-0661-4M-NC
0130-4696-02, 203901240

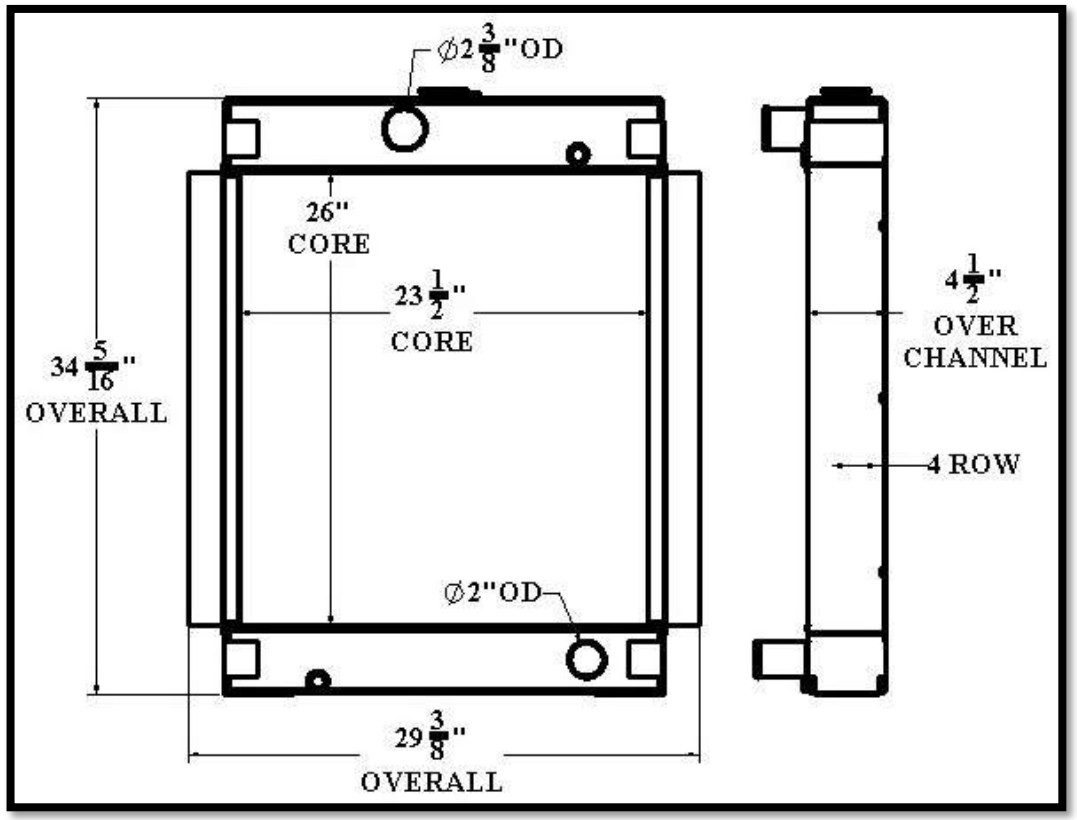

Overall Dimensions: 34-5/16” X 29-3/8” X 4-1/2”
Core: 26” X 23-1/2” X 4 ROW
Inlet: 2-3/8”OD
Outlet: 2”OD

Tel 1.800.774.2168
www.bgrradiator.com

BGR Part Number: ST-0662-3M-NC
MNY20224301E0P

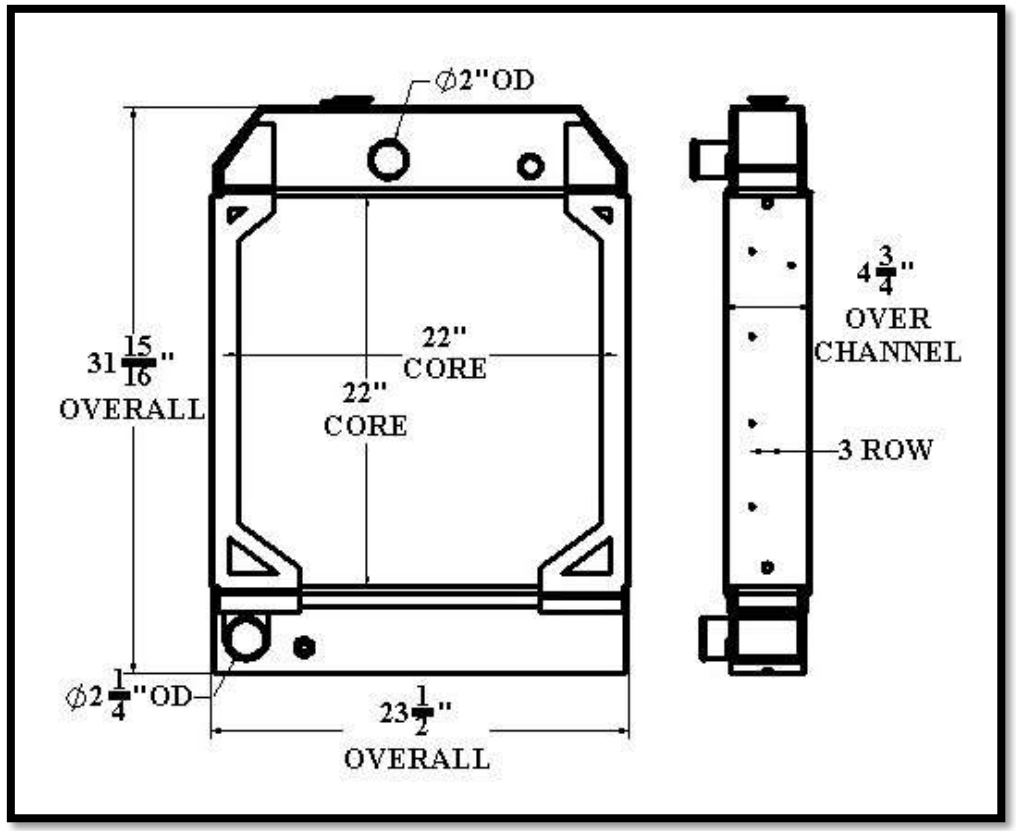

Overall Dimensions: 31-15/16” X 23-1/2” X 4-3/4”
Core: 22” X 22” X 3 ROW
Inlet: 2”OD
Outlet: 2-1/4”OD

ST661

Listed dimensions may vary slightly from OE

ST662

BGR Part Number: ST-0663-4M-NC

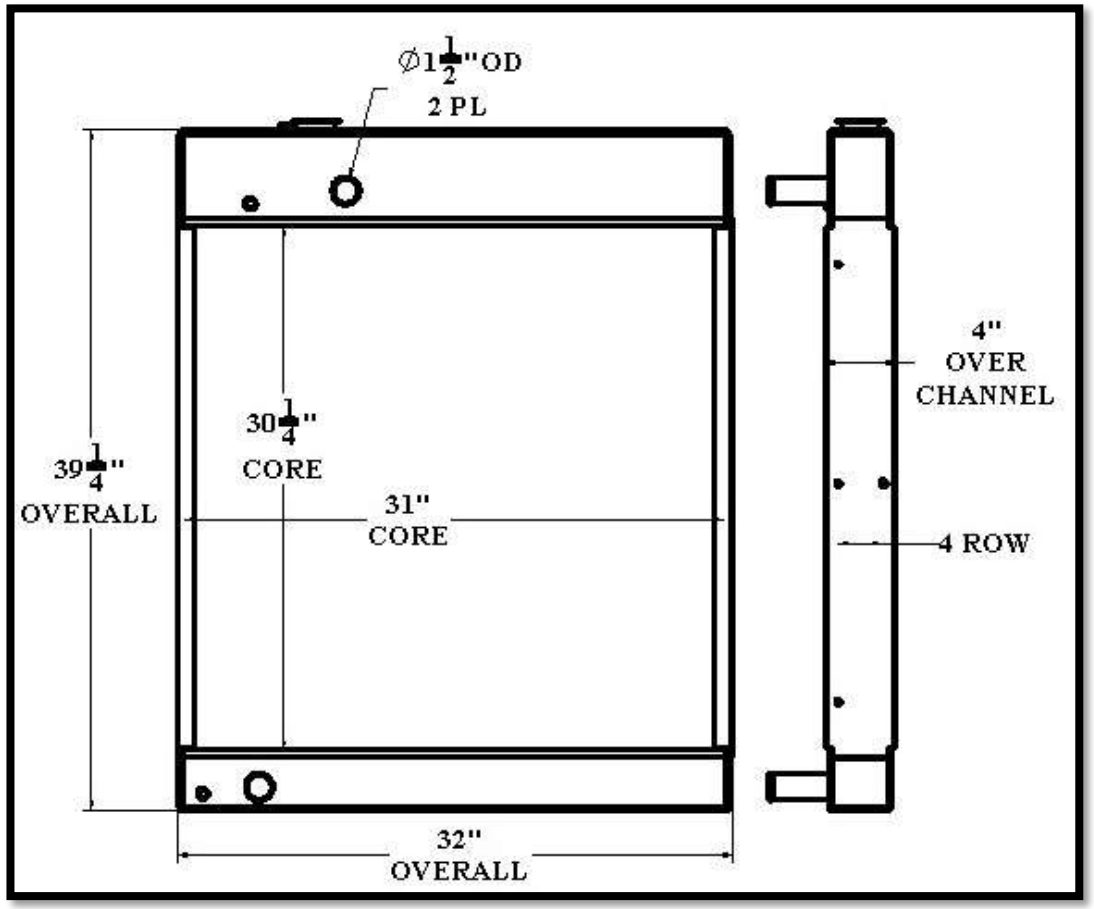

Overall Dimensions: 39-1/4” X 32” X 4”
Core: 30-1/4” X 31” X 4 ROW
Inlet: 1-1/2”OD
Outlet: 1-1/2”OD

Tel 1.800.774.2168
www.bgrradiator.com

BGR Part Number: ST-0664-7M-NC

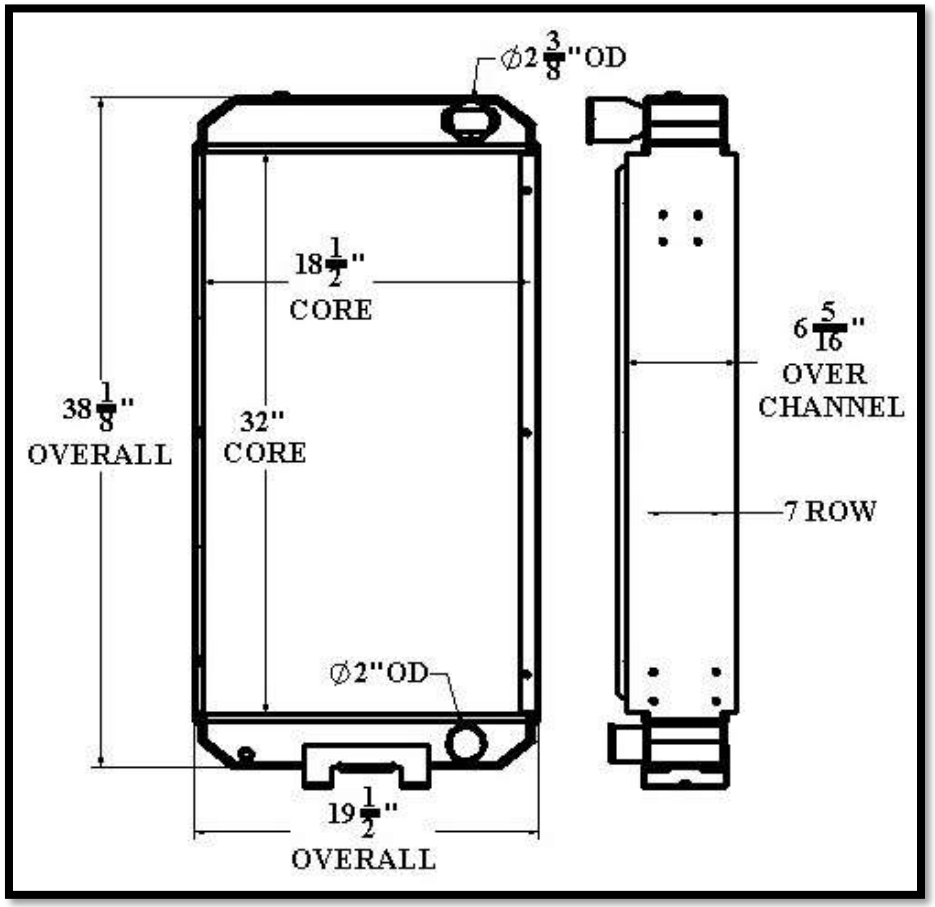

Overall Dimensions: 38-1/8” X 19-1/2” X 6-5/16”
Core: 32” X 18-1/2” X 7 ROW
Inlet: 2-3/8”OD
Outlet: 2”OD

ST663

Listed dimensions may vary slightly from OE

ST664

BGR Part Number: ST-0665-5M-NC
RS-2688, 10623-01

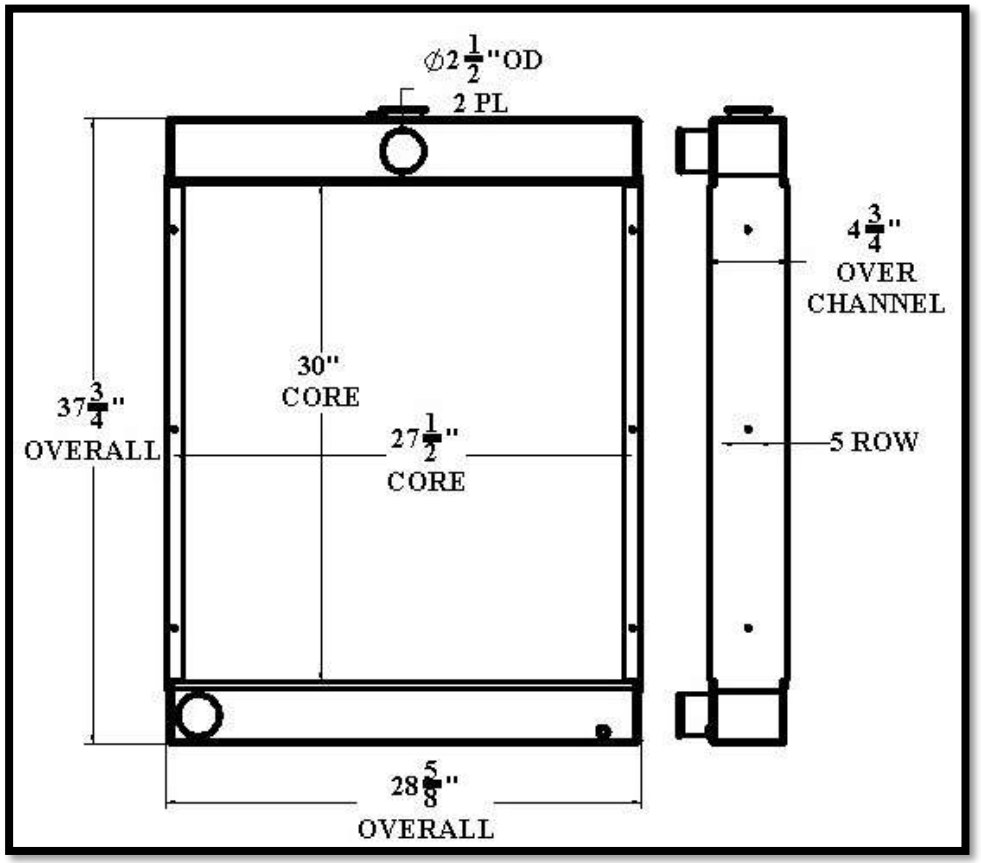

Overall Dimensions: 37-3/4” X 28-5/8” X 4-3/4”
Core: 30” X 27-1/2” X 5 ROW
Inlet: 2-1/2”OD
Outlet: 2-1/2”OD

Tel 1.800.774.2168
www.bgrradiator.com

BGR Part Number: ST-0666-5M-F

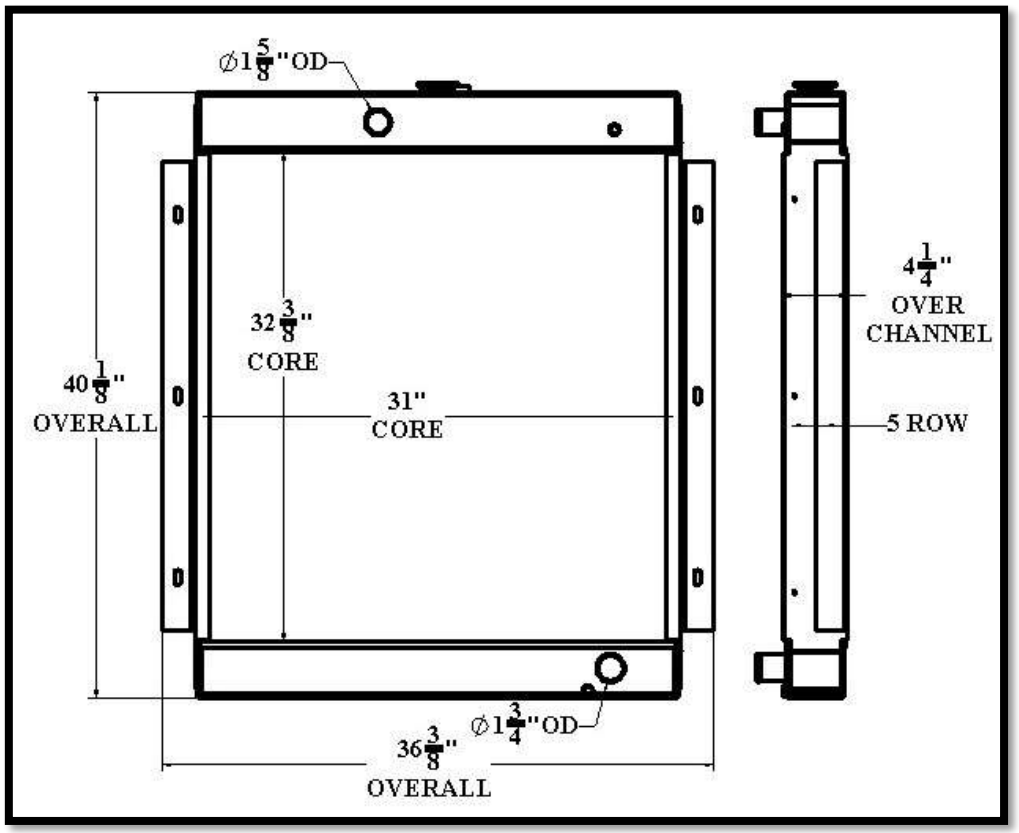

Overall Dimensions: 40-1/8” X 36-3/8” X 4-1/4”
Core: 32-3/8” X 31” X 5 ROW
Inlet: 1-5/8”OD
Outlet: 1-3/4”OD

ST665

Listed dimensions may vary slightly from OE

ST666

BGR Part Number: ST-0667-4M-NC

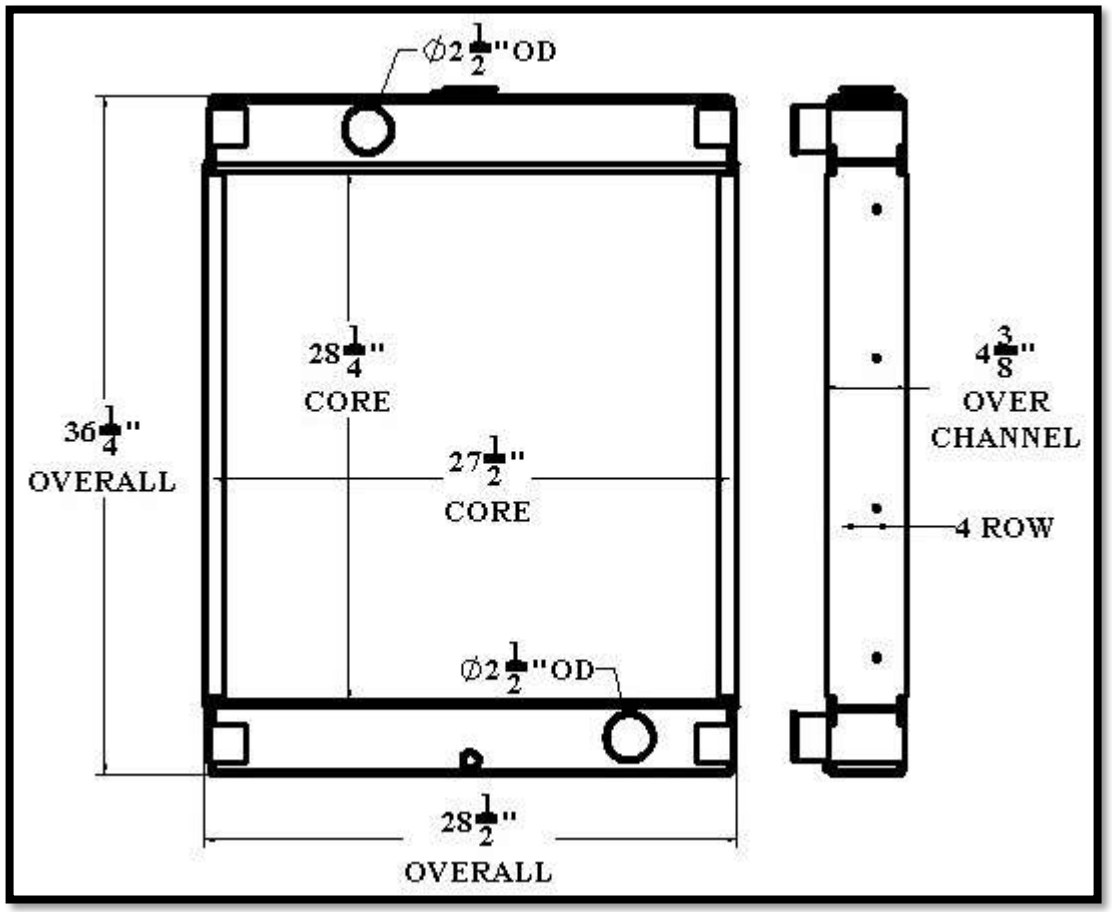

Overall Dimensions: 36-1/4” X 28-1/2” X 4-3/8”
Core: 28-1/4” X 27-1/2” X 4 ROW
Inlet: 2-1/2”OD
Outlet: 2-1/2”OD

Tel 1.800.774.2168
www.bgrradiator.com

BGR Part Number: ST-0668-3M-NC

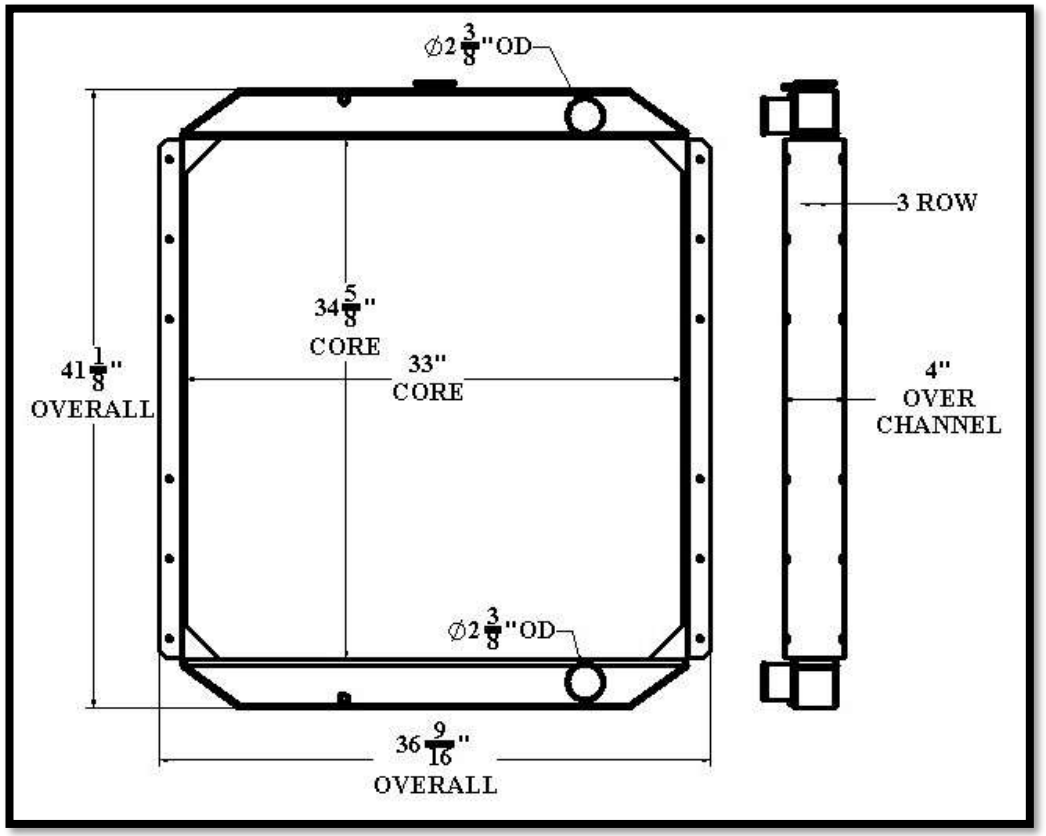

Overall Dimensions: 41-1/8” X 36-9/16” X 4”
Core: 34-5/8” X 33” X 3 ROW
Inlet: 2-3/8”OD
Outlet: 2-3/8”OD

ST667

Listed dimensions may vary slightly from OE

ST668

BGR Part Number: BT-0001-6R
OEM: SN849946

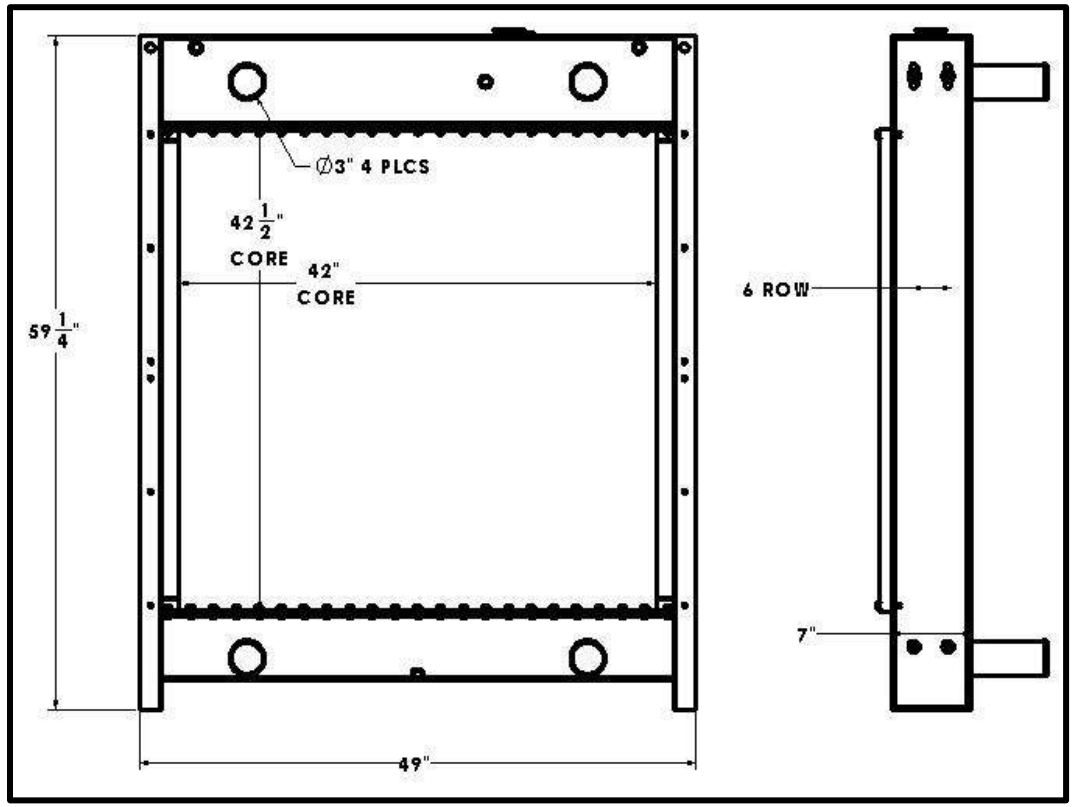

Overall Dimensions: 59-1/4” X 49” X 7”
Core: 42-1/2” X 42” X 6 Row
Inlet: 3” OD (2 Places)
Outlet: 3” OD (2 Places)

Tel 1.800.774.2168
www.bgrradiator.com

BGR Part Number: BT-0002-5Z
OEM: Generac 10130 13.3L 230-275

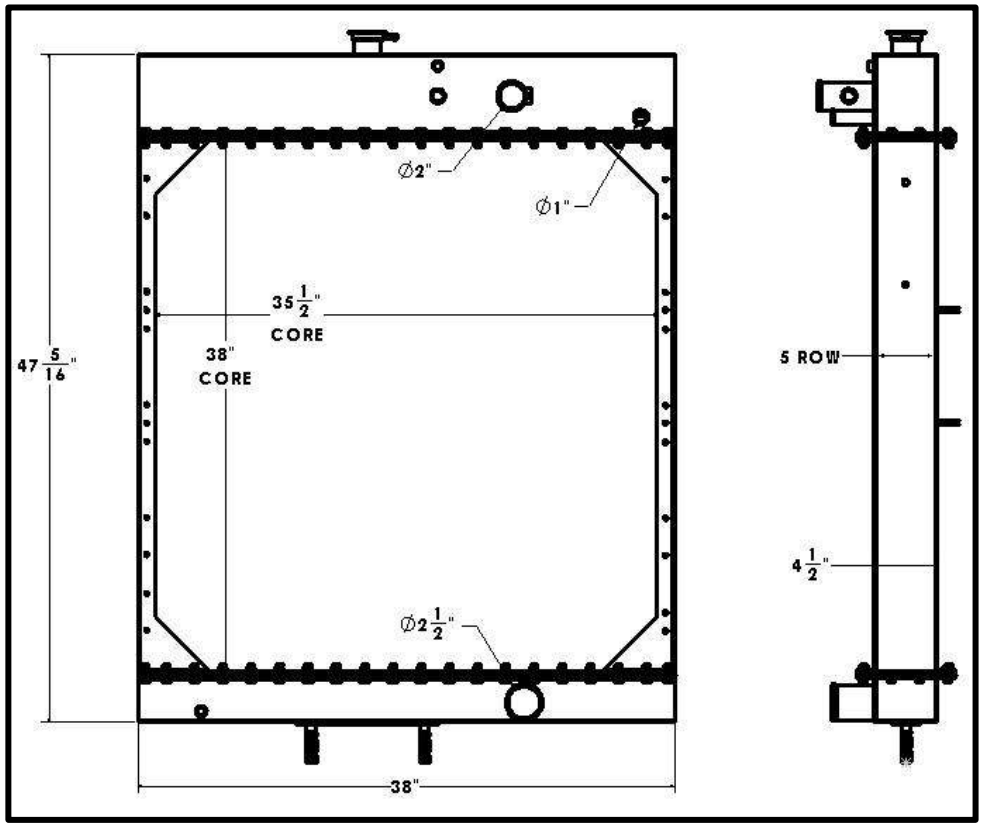

Overall Dimensions: 47-5/16” X 38” X 4-1/2”
Core: 38” X 35-1/2” X 5 Row
Inlet: 2” OD with Deaeration
Outlet: 2-1/2” OD

Listed dimensions may vary slightly from OE

BGR Part Number: BT-0003-4I
OEM: PN 120-258A

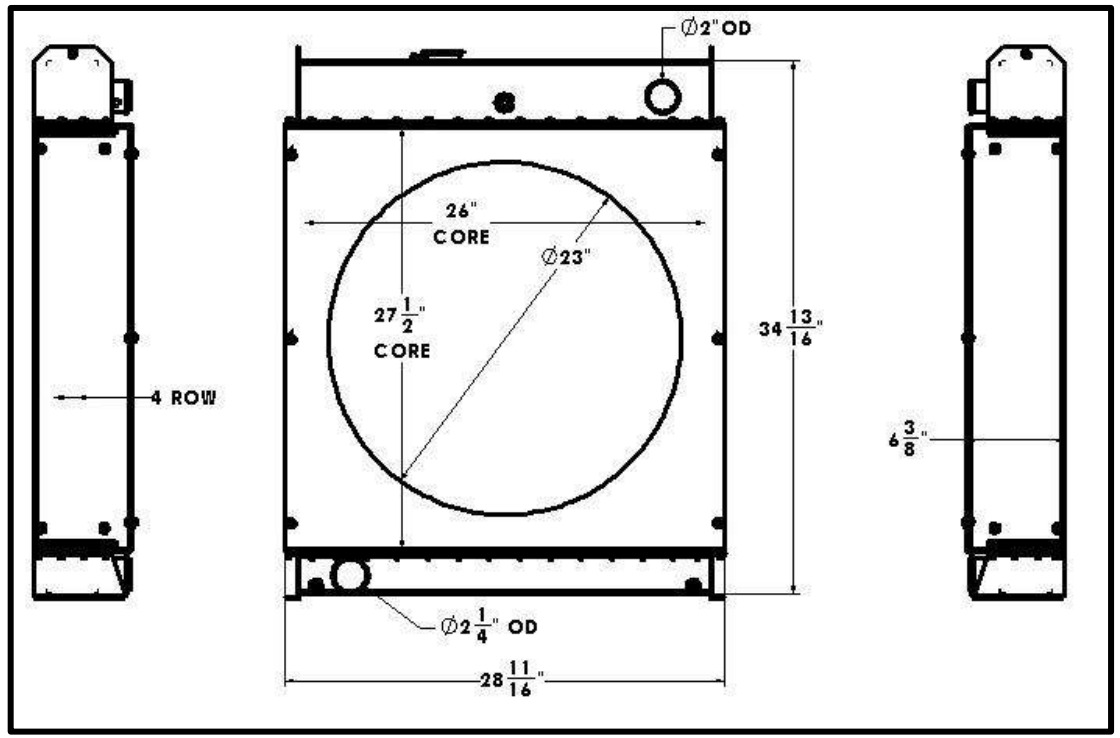

Overall Dimensions : 34-13/16” X 28-11/16” X 6-3/8”
Core: 27-1/2” X 26” X 4 Row
Inlet: 2” OD
Outlet: 2-1/4” OD

Tel 1.800.774.2168
www.bgrradiator.com

BGR Part Number: BT-0004-5I
ONAN Part Number: 130-0992, Modine 1A11511

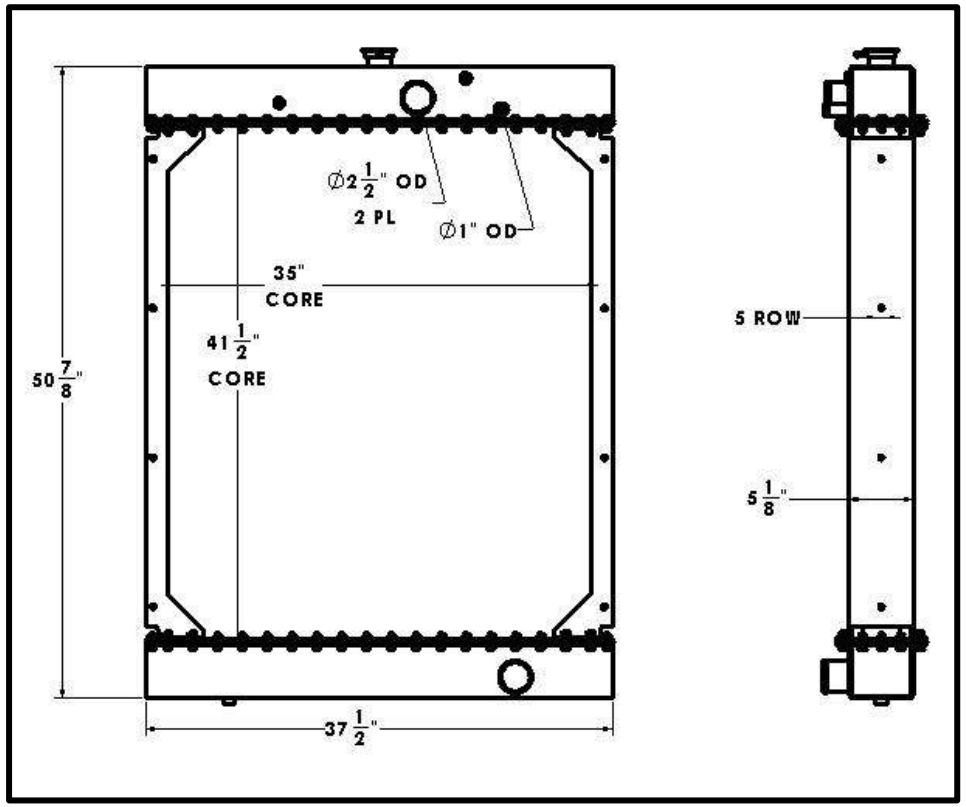

Overall Dimensions: 50-7/8” X 37-1/2” X 5-1/8”
Core: 41-1/2” X 35” X 5 Row
Inlet: 2-1/2” OD
Outlet: 2-1/2” OD

Listed dimensions may vary slightly from OE

BGR Part Number: BT-0005-6R
ONAN Part Number: 130-1197

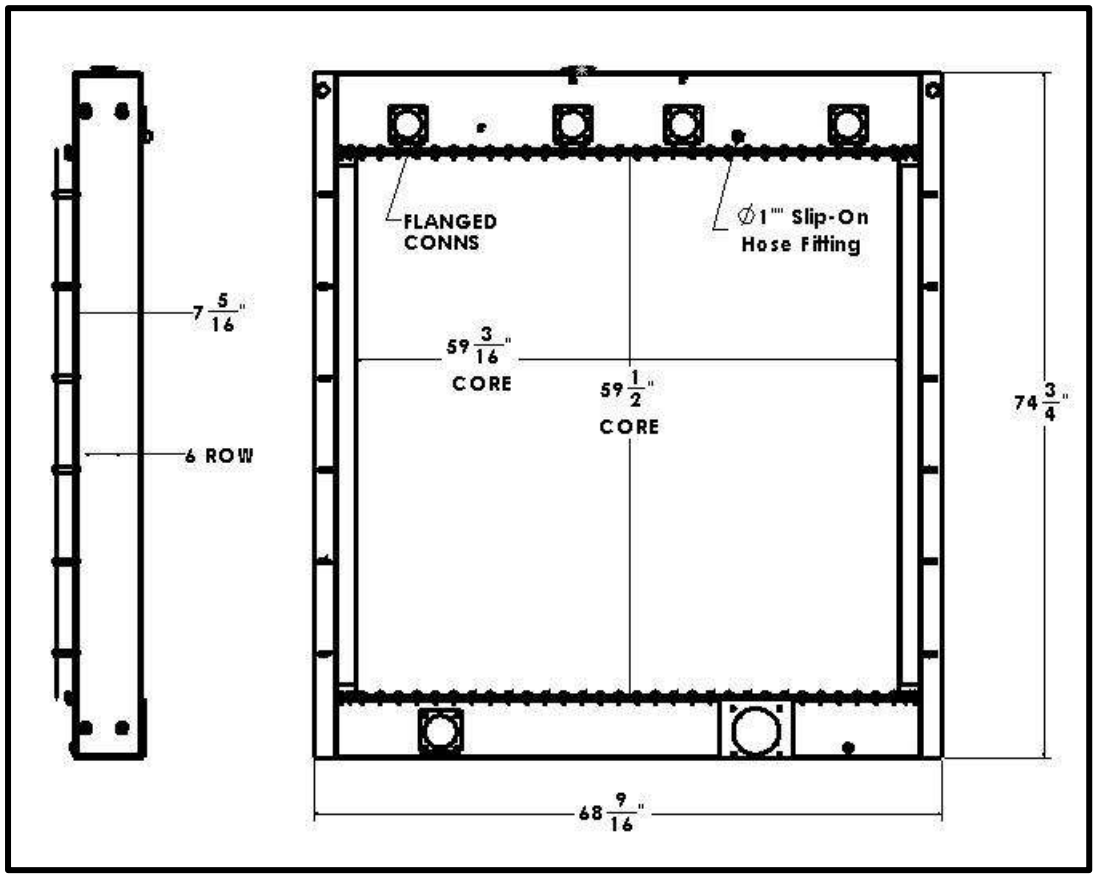

Overall Dimensions: 74-3/4” X 68-9/16” X 7-5/16”
Core: 59-1/2” X 59-3/16” X 6 Row
Inlet: Bolted Flange
Outlet: Bolted Flange

Tel 1.800.774.2168
www.bgrradiator.com

BGR Part Number: BT-0006-8I
ONAN Part Number: 130-1239

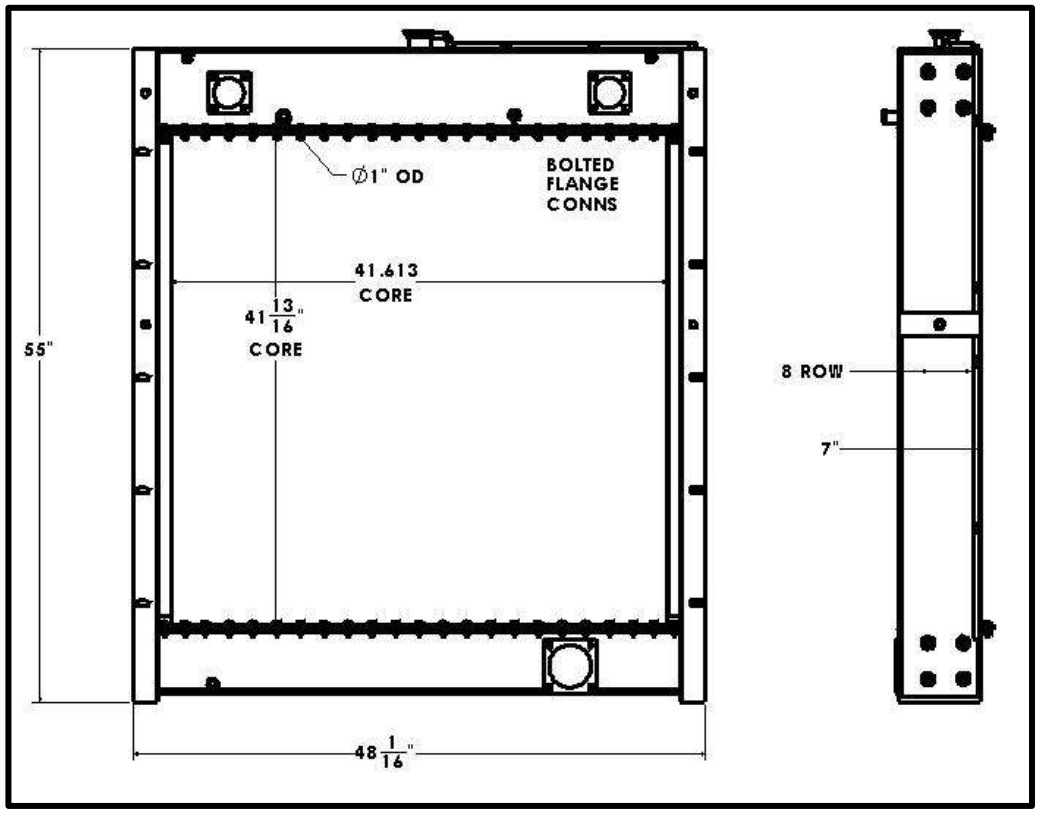

Overall Dimensions: 55” X 48-1/6” X 7”
Core: 41-13/16” X 41-5/8” X 8 Row
Inlet: Bolted Flange
Outlet: Bolted Flange

Listed dimensions may vary slightly from OE

BGR Part Number: BT-0007-6I
ONAN Part Number: 130-2117

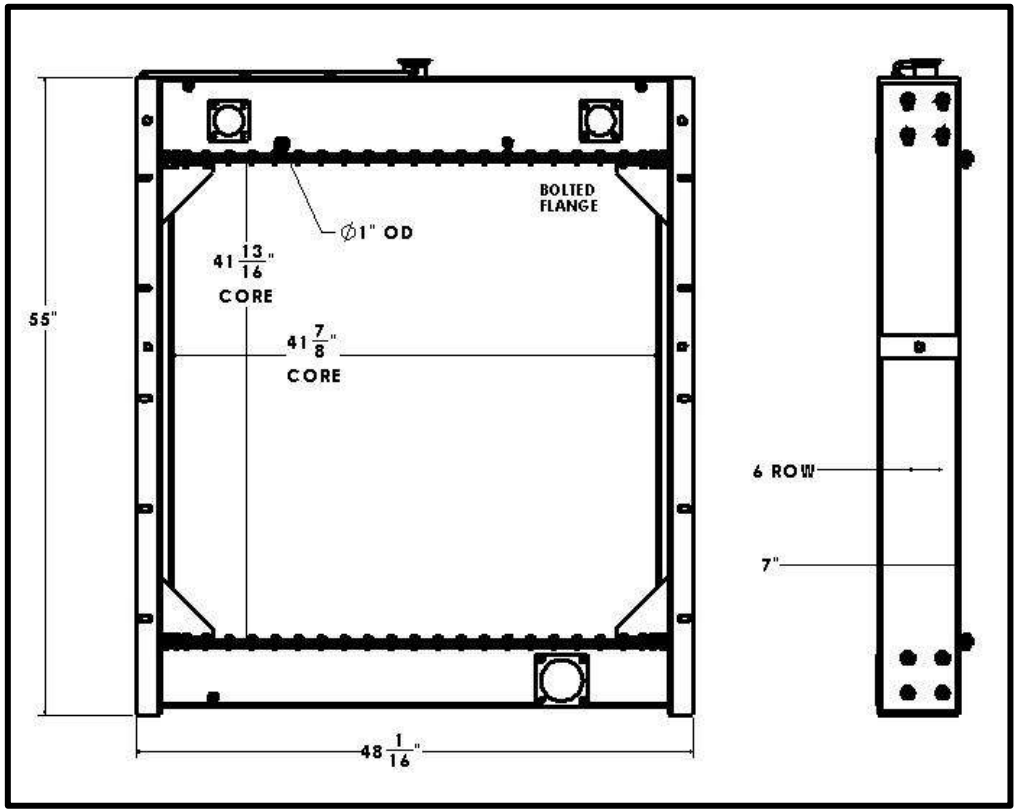

Overall Dimensions: 55” X 48-1/16” X 7”
Core: 41-13/16” X 41-7/8” X 6 Row
Inlet: Bolted Flange
Outlet: Bolted Flange

Tel 1.800.774.2168
www.bgrradiator.com

BGR Part Number: BT-0008-6I
OEM: A123358

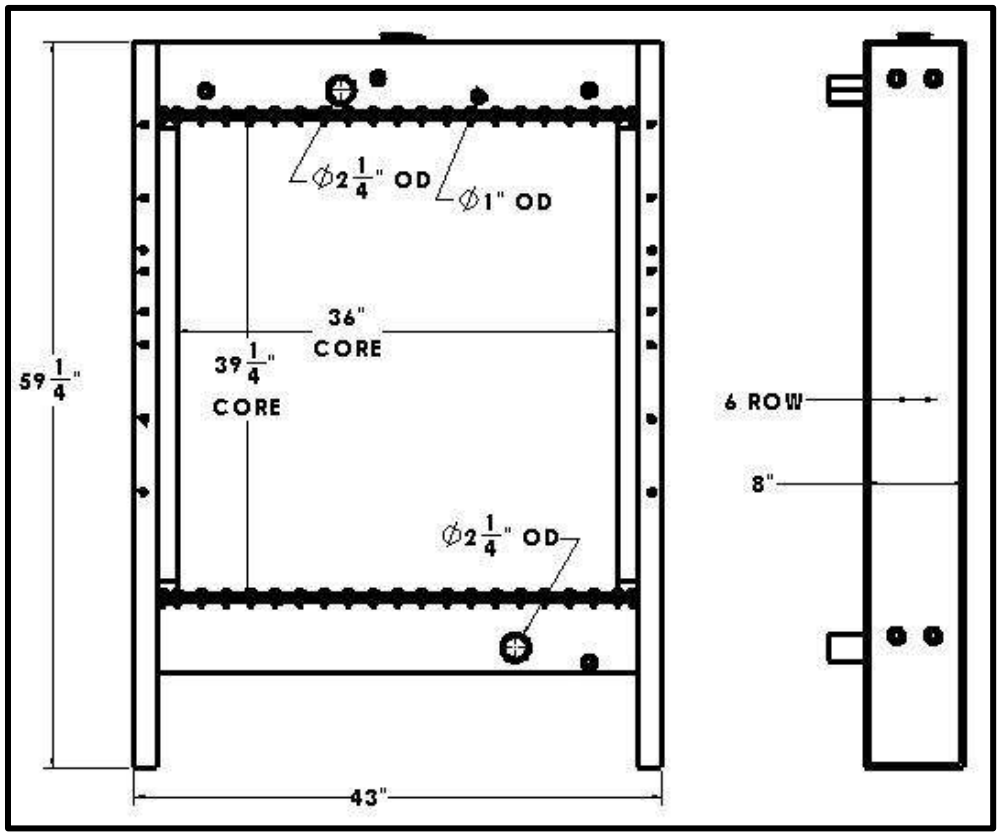

Overall Dimensions : 59-1/4” X 43” X 8”
Core: 39-1/4” X 36” X 6 Row
Inlet: 2-1/4” OD with Deaeration
Outlet: 2-1/4” OD

Listed dimensions may vary slightly from OE

BGR Part Number: BT-0009-5N
ONAN Part Number: 130-3587

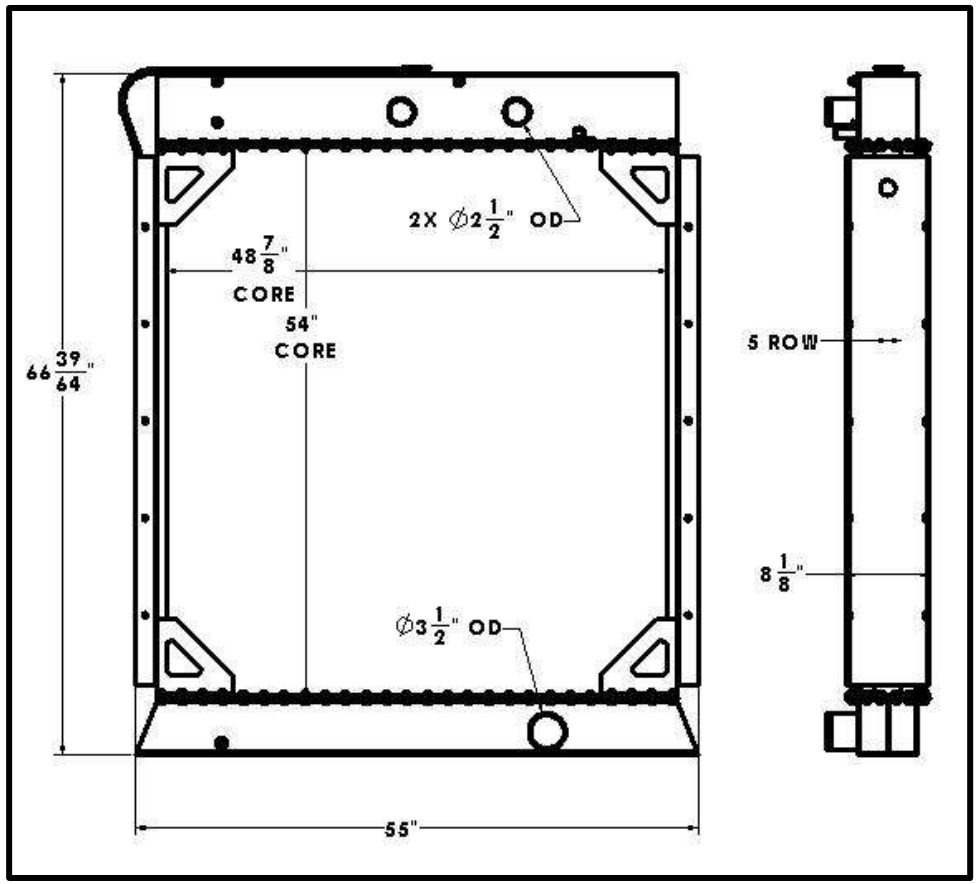

Overall Dimensions : 66-39/64” X 55” X 8-1/8”
Core: 54” X 48-7/8” X 5 Row
Inlet: 2-1/2” OD (2Places) with Deaeration
Outlet: 3-1/2” OD

Tel 1.800.774.2168
www.bgrradiator.com

BGR Part Number: BT-0010-7I
OEM: Detroit

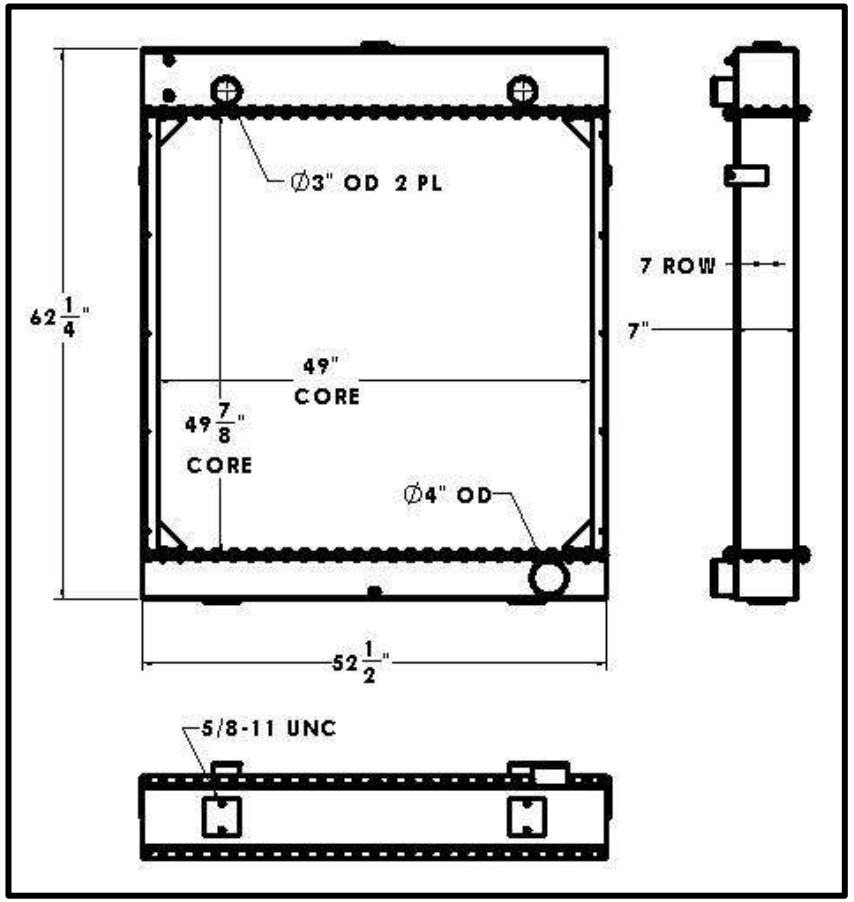

Overall Dimensions: 62-1/4” X 52-1/2” X 7”
Core: 49-7/8” X 49” X 7 Row
Inlet: 3” OD (2 Places)
Outlet: 4” OD

Listed dimensions may vary slightly from OE

BGR Part Number: BT-0011-6T
OEM:

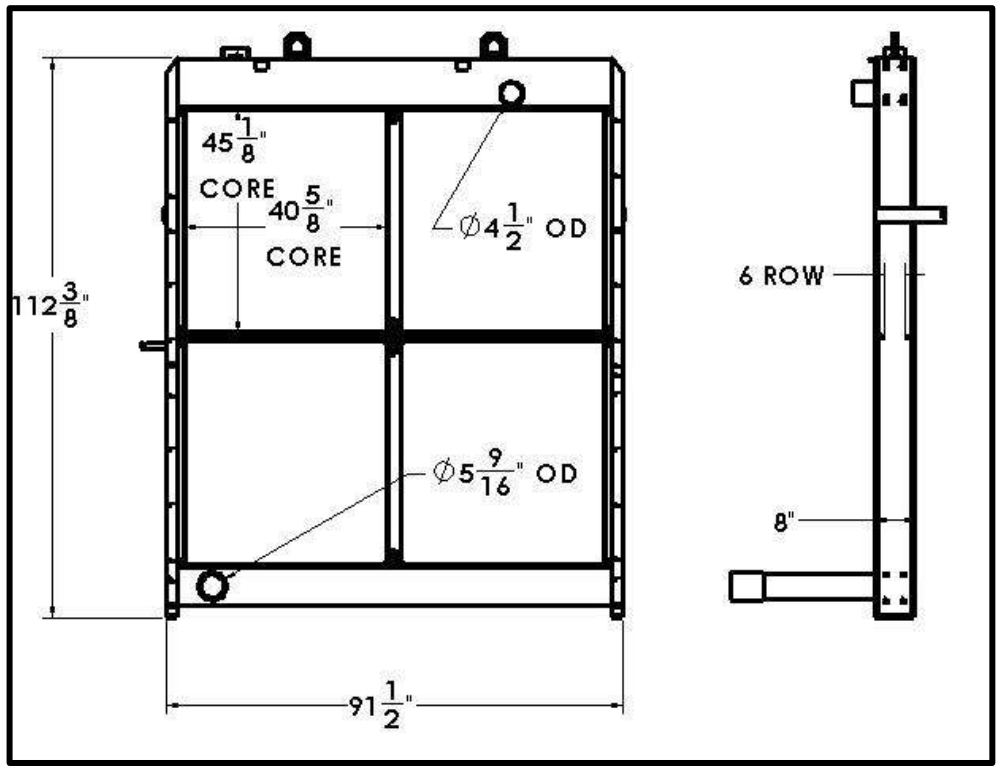

Overall Dimensions: 112-3/8” X 91-1/2” X 8”
Core: 4 Cores at 45-1/8” X 40-5/8” X 6 Row
Inlet: 4-1/2” OD
Outlet: 5-9/16” OD

Tel 1.800.774.2168
www.bgrradiator.com

BGR Part Number: BT-0012-6Z
OEM: Bear ward 55054AEB

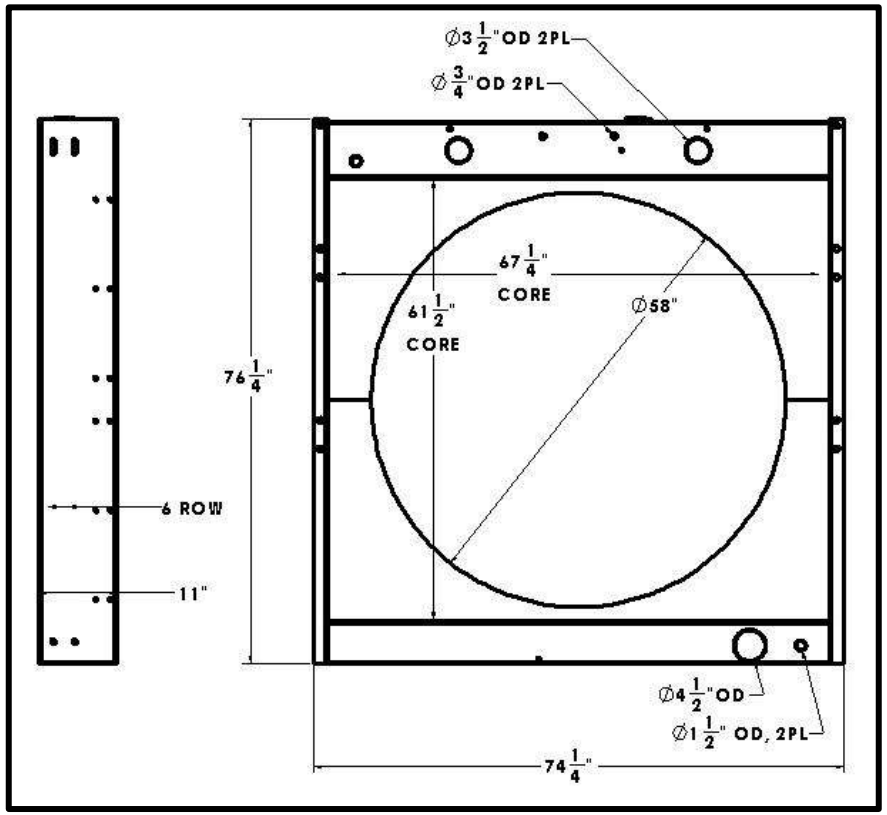

Overall Dimensions: 76-1/4” X 74-1/4” X 11”
Core: 61-1/2” X 67-1/4” X 6 Row
Inlet: 3-1/2” OD (2 Places)
Outlet: 4-1/2” OD

Listed dimensions may vary slightly from OE

BGR Part Number: BT-0013-5I
OEM:

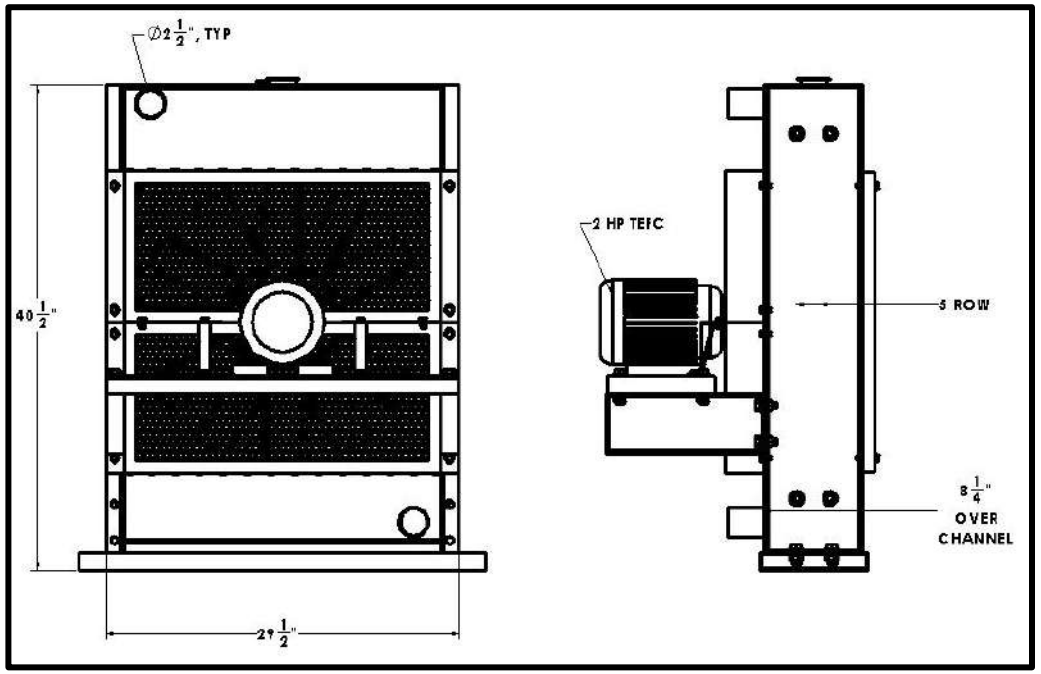

Overall Dimensions : 40-1/2” X 29-1/2” X 8-1/4”
Core: 24-1/4” X 24-1/4” X 5 Row
Inlet: 2-1/2” OD
Outlet: 2-1/2” OD

Tel 1.800.774.2168
www.bgrradiator.com

BGR Part Number: BT-0014-5Z
OEM: O & M 167450A

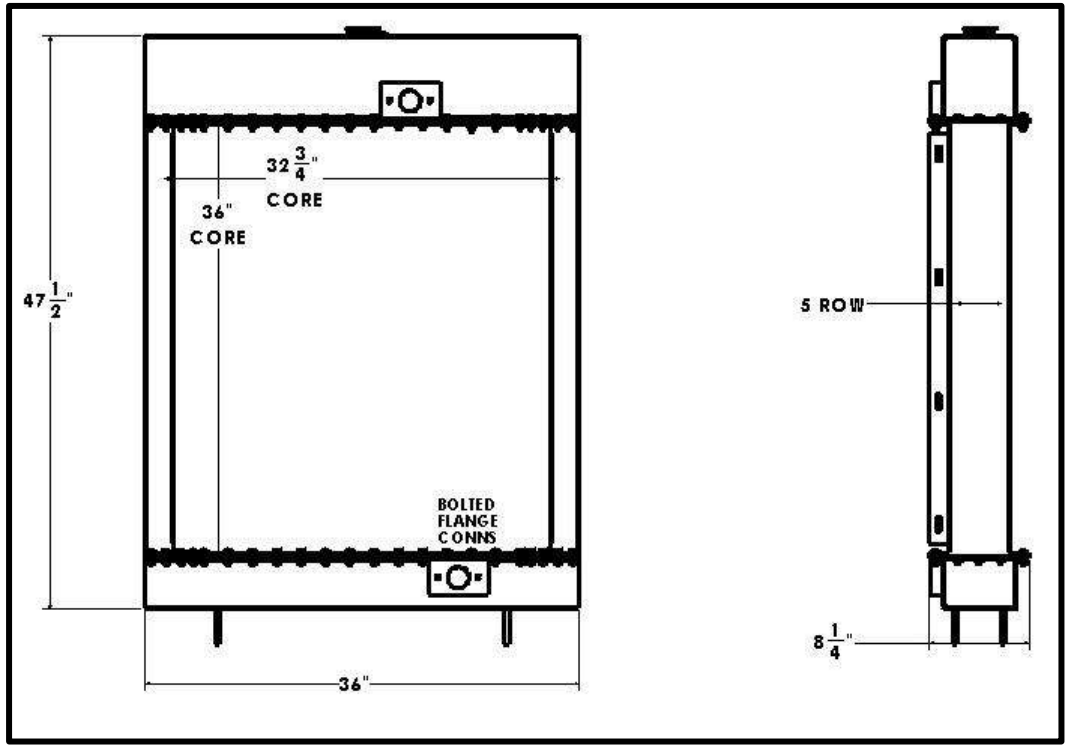

Overall Dimensions: 47-1/2” X 36” X 8-1/4”
Core: 36” X 32-3/4” X 5 Row
Inlet: Bolted Flange
Outlet: Bolted Flange

Listed dimensions may vary slightly from OE

BGR Part Number: BT-0015-7I
OEM:

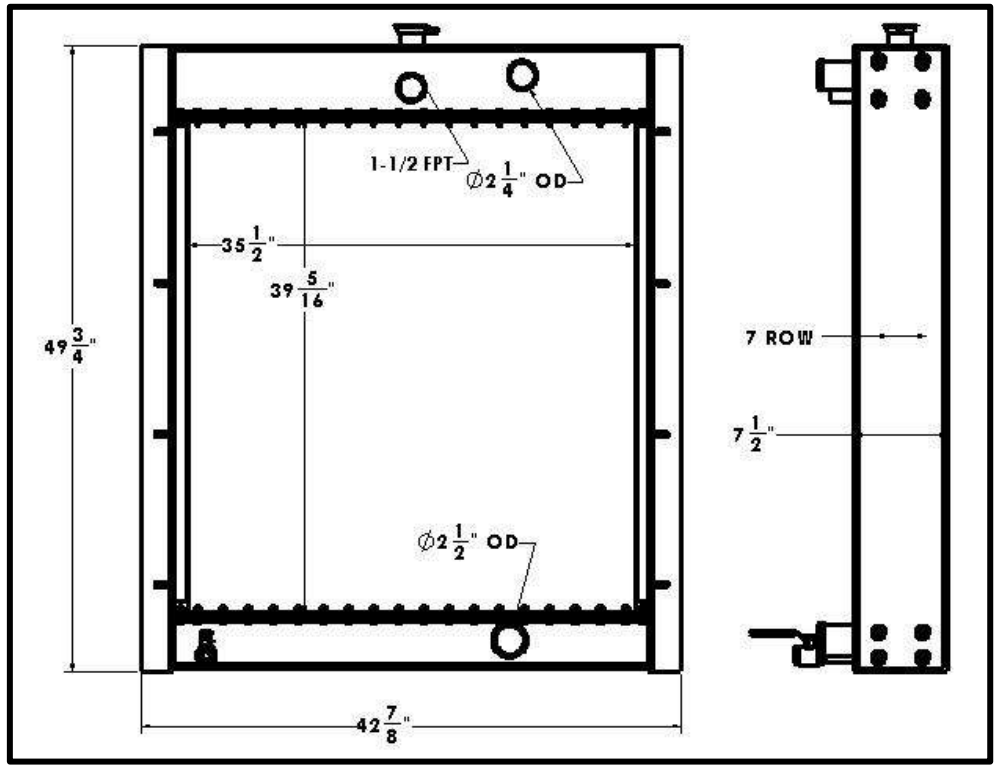

Overall Dimensions: 49-3/4” X 42-7/8” X 7-1/2”
Core: 39-5/16” X 35-1/2” X 7 Row
Inlet: 2-1/4” OD & 1-1/2” FPT, with Deaeration
Outlet: 2-1/2” OD

Tel 1.800.774.2168
www.bgrradiator.com

BGR Part Number: BT-0016-8I
OEM: Perfex OV-32-RV

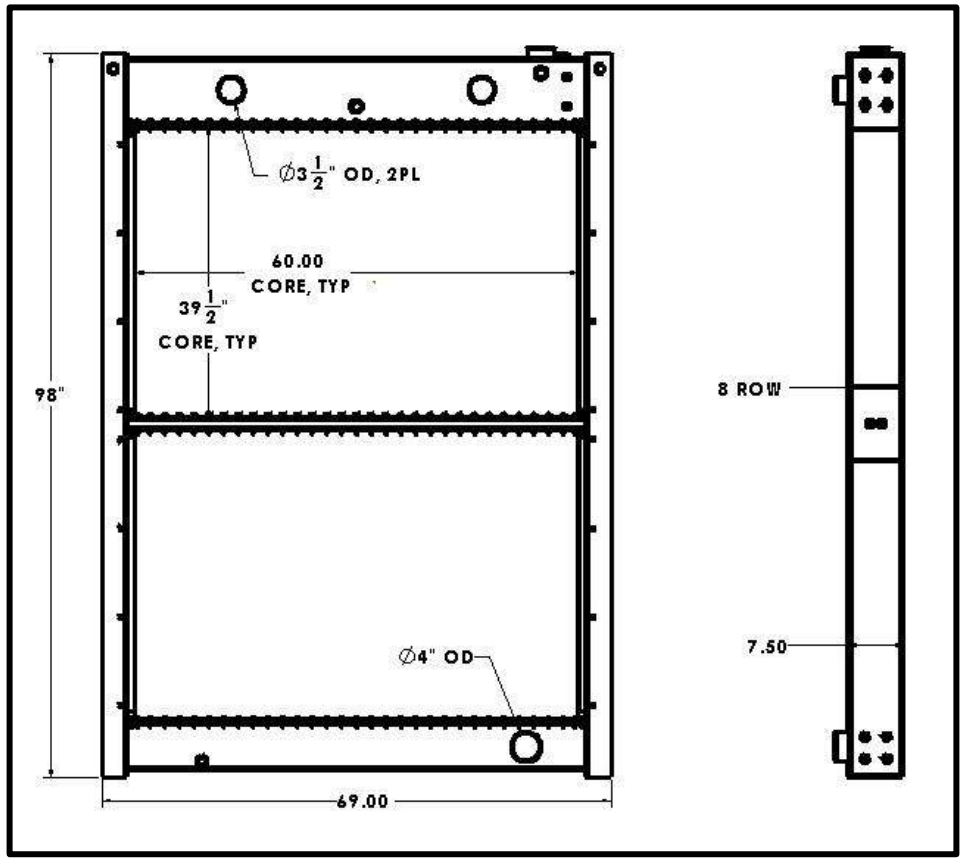

Overall Dimensions: 98” X 69” X 7-1/2”
Core: 39-1/2” X 40” X 8 Row (2 Core Sections)
Inlet: 3-1/2” OD
Outlet: 4” OD

Listed dimensions may vary slightly from OE

BGR Part Number: BT-0017-2VTR
OEM: PN 120-258, PN 56009/1184
1006TG

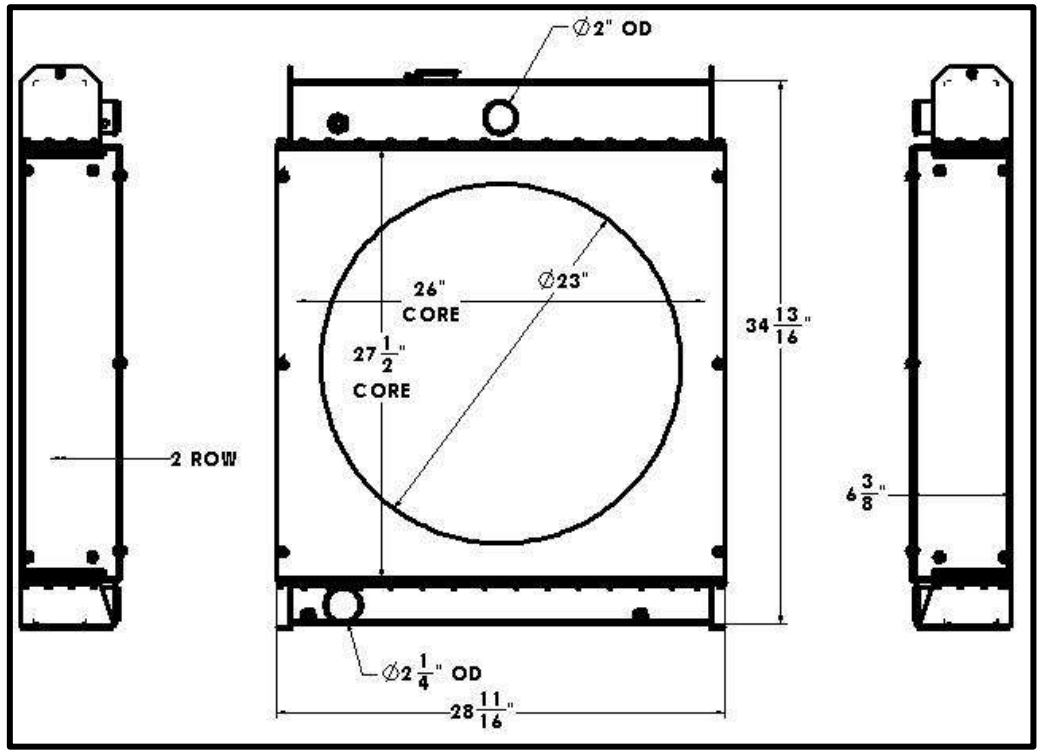

Overall Dimensions : 34-13/16” X 28-11/16” X 6-3/8”
Core: 27-1/2” X 26” X 2 Row
Inlet: 2” OD
Outlet: 2-1/4” OD

Tel 1.800.774.2168
www.bgrradiator.com

BGR Part Number: BT-0018-6R
OEM: 1A11221D

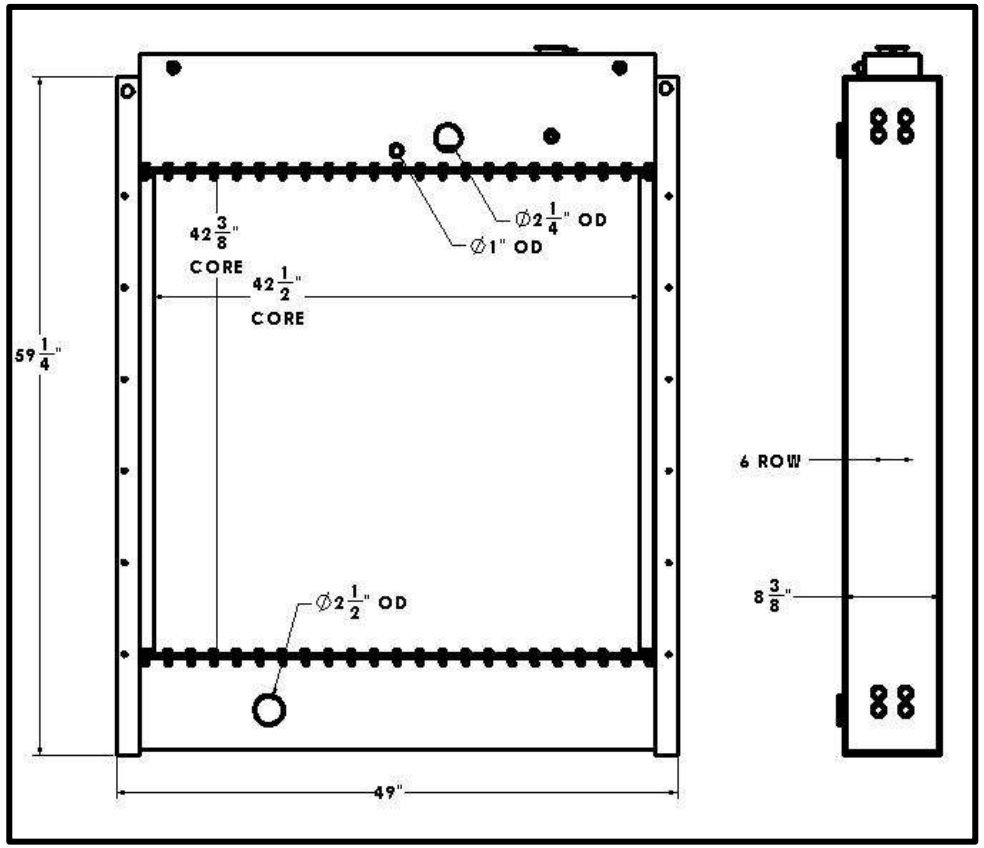

Overall Dimensions : 59-1/4” X 49” X 8-3/8”
Core: 42-3/8” X 42-1/2” X 6 Row
Inlet: 2-1/4” OD with Deaeration
Outlet: 2-1/2” OD

Listed dimensions may vary slightly from OE

BGR Part Number: BT-0019-5R
OEM: M-9-EF

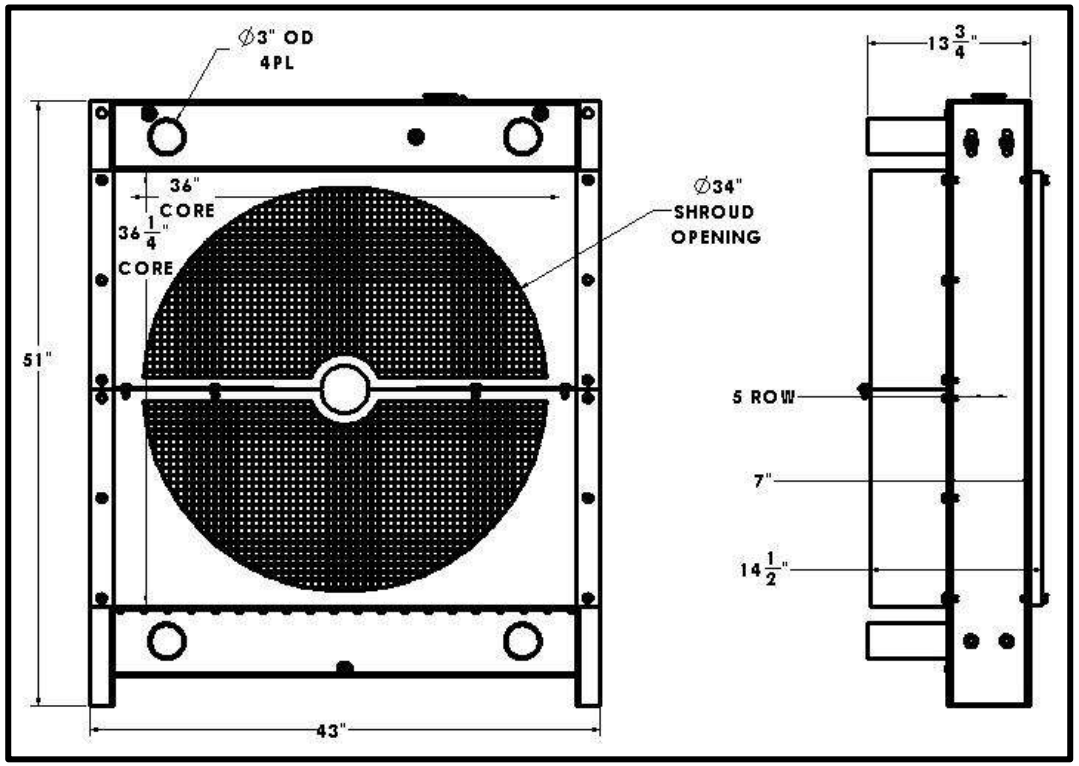

Overall Dimensions : 51” X 43” X 14-1/2”
Core: 36-1/4” X 36” X 5 Row
Inlet: 3” OD (2 Places)
Outlet: 3” OD (2 Places)

Tel 1.800.774.2168
www.bgrradiator.com

BGR Part Number: BT-0020-7I
OEM: M-12

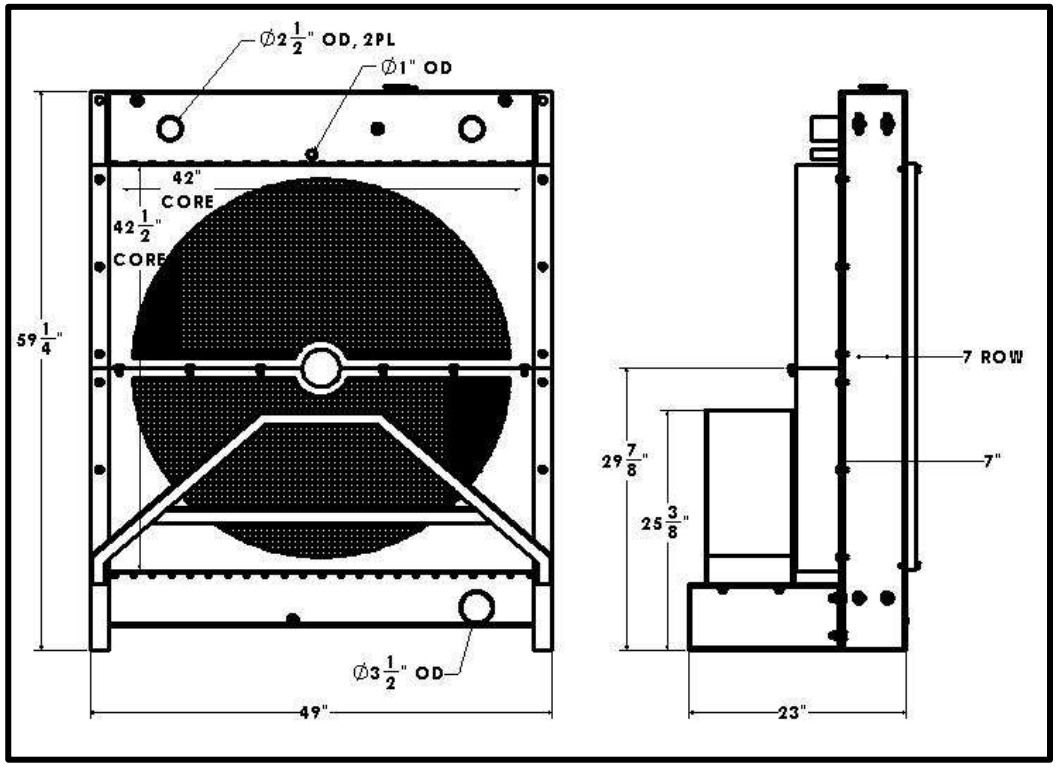

Overall Dimensions : 59-1/4” X 49” X 23”
Core: 42-1/2” X 42” X 7 Row
Inlet” 2-1/2” OD, (2 Places) with Deaeration
Outlet: 3” OD
Note: Available with Fan & TEFC Electric Motor

Listed dimensions may vary slightly from OE

BGR Part Number: BT-0021-7I
OEM: M12-EF

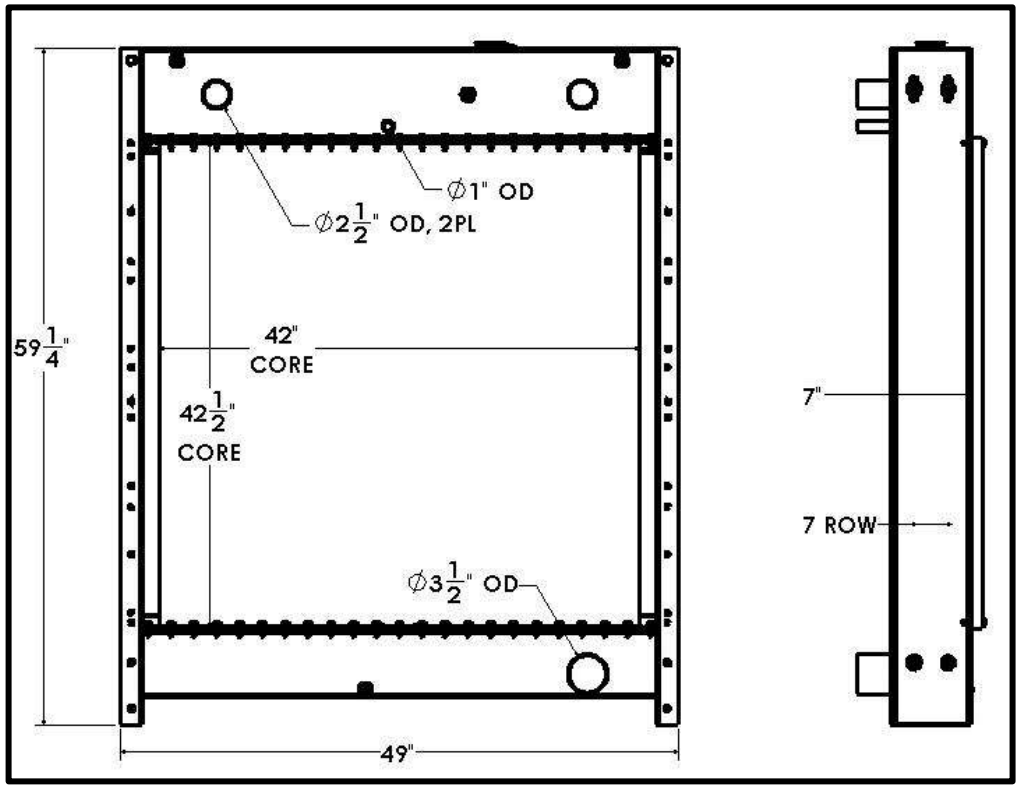

Overall Dimensions : 59-1/4” X 49” X 7”
Core: 42-1/2” X 42” X 7 Row
Inlet: 2-1/2” OD (2 Places) with Deaeration
Outlet: 3-1/2” OD

Tel 1.800.774.2168
www.bgrradiator.com

BGR Part Number: BT-0022-5Z
OEM: M-12-EF, 2A15503, A-274274

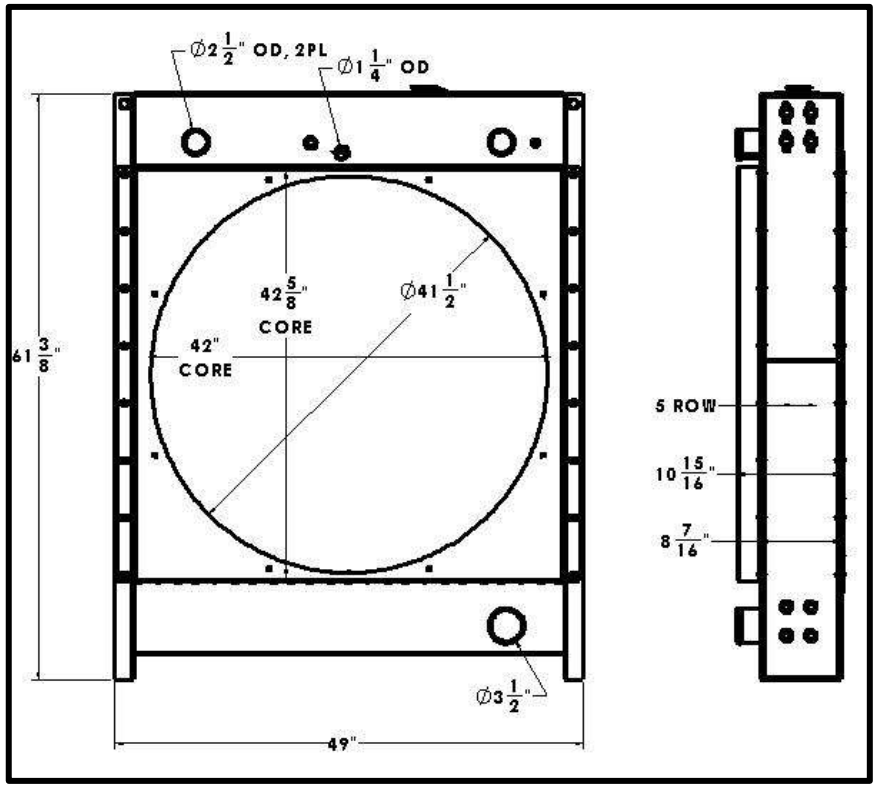

Overall Dimensions : 61-3/8” X 49” X 10-15/16”
Core: 42-15/8” X 42” X 5 Row
Inlet: 2-1/2” OD (2 Places) with Deaeration
Outlet: 3-1/2” OD

Listed dimensions may vary slightly from OE

BGR Part Number: BT-0023-6Z
OEM: BK3, Mod# 2-1A9943

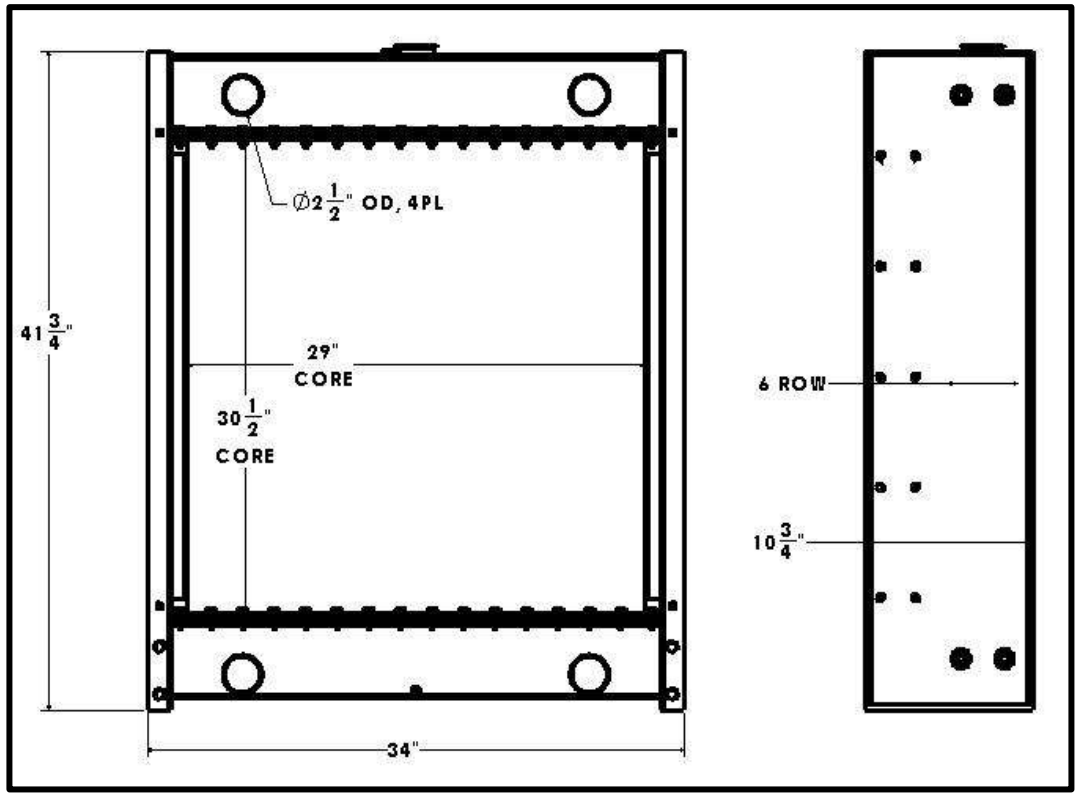

Overall Dimensions : 41-3/4” X 34” X 10-3/4”
Core: 30-1/2” X 29” X 6 Row
Inlet: 2-1/2” OD (2 Places)
Outlet: 2-1/2” OD (2 Places)

Tel 1.800.774.2168
www.bgrradiator.com

BGR Part Number: BT-0024-6Z
OEM: M-20, 1A15499, A-272949

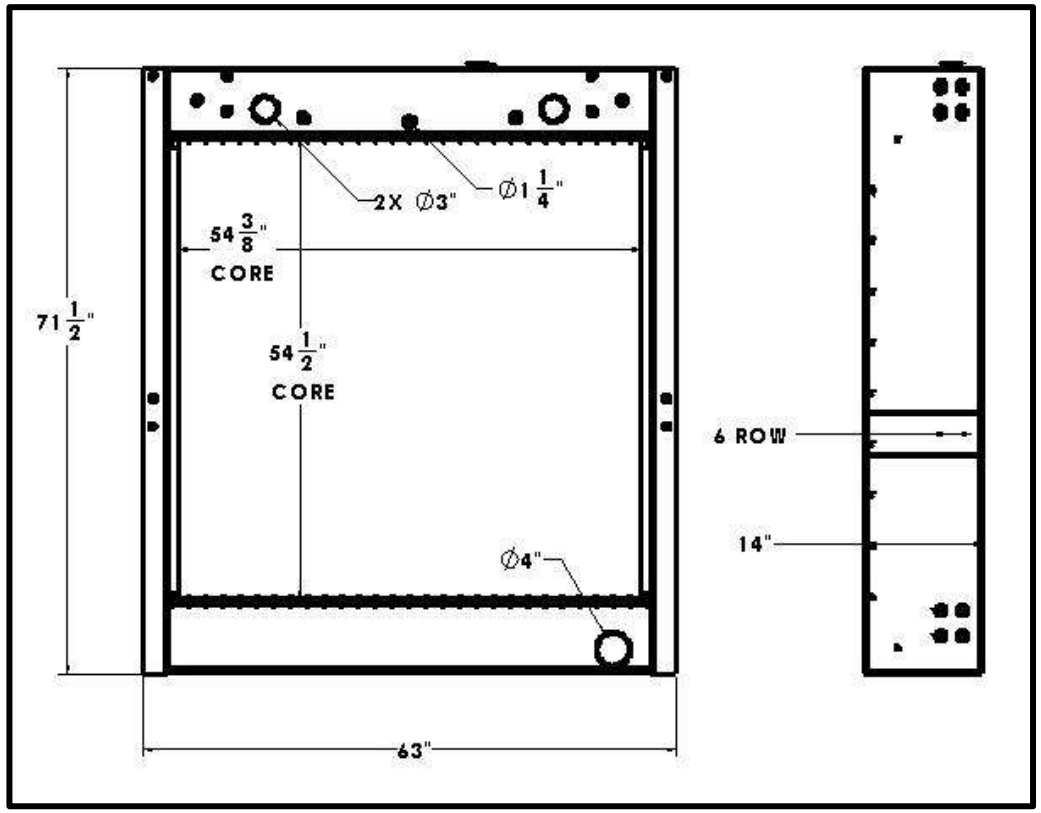

Overall Dimensions : 71-1/2” X 63” X 14”
Core: 54-1/2” X 54-3/8” X 6 Row
Inlet: 3” OD (2 Places)
Outlet: 4” OD

Listed dimensions may vary slightly from OE

BGR Part Number: BT-0025-5R
ONAN PART NUMBER 130-3527

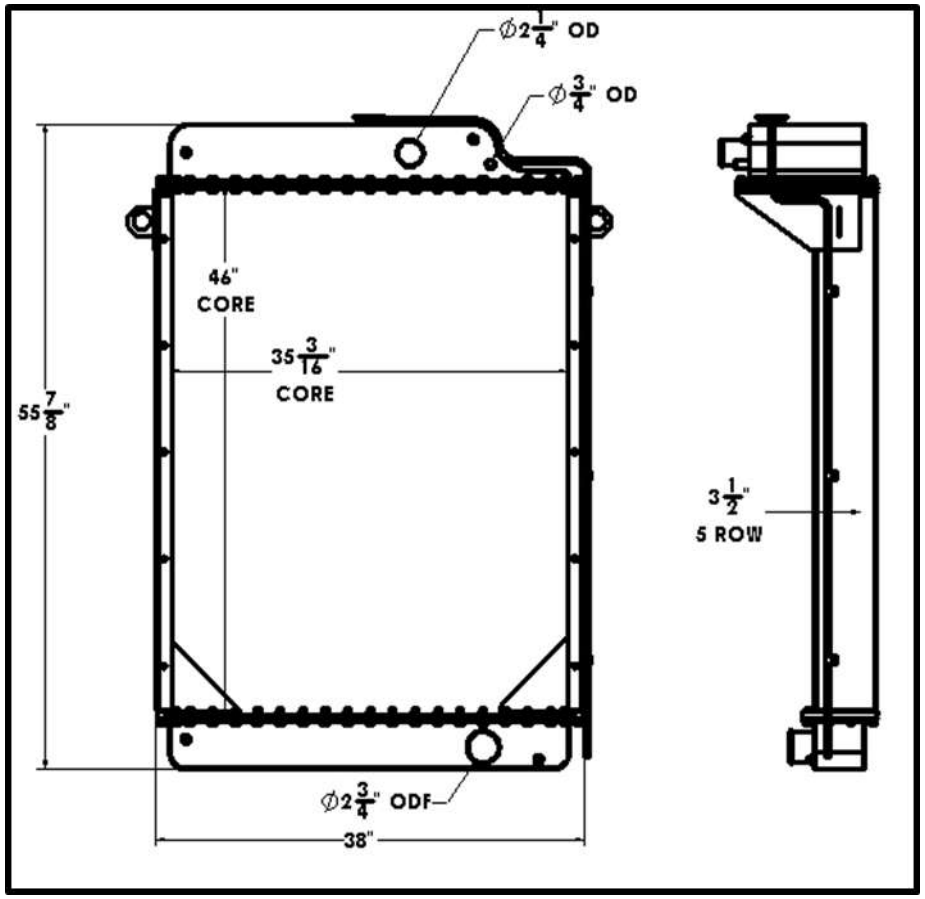

Overall Dimensions : 55-7/8” X 38” X 5-9/16”
Core: 46” X 35-3/16” X 5 Row
Inlet: 2-1/4” 2PL
Outlet 2-3/4”

Tel 1.800.774.2168
www.bgrradiator.com

BGR Part Number: BT-0026-8R
OEM: ONAN 130-1240

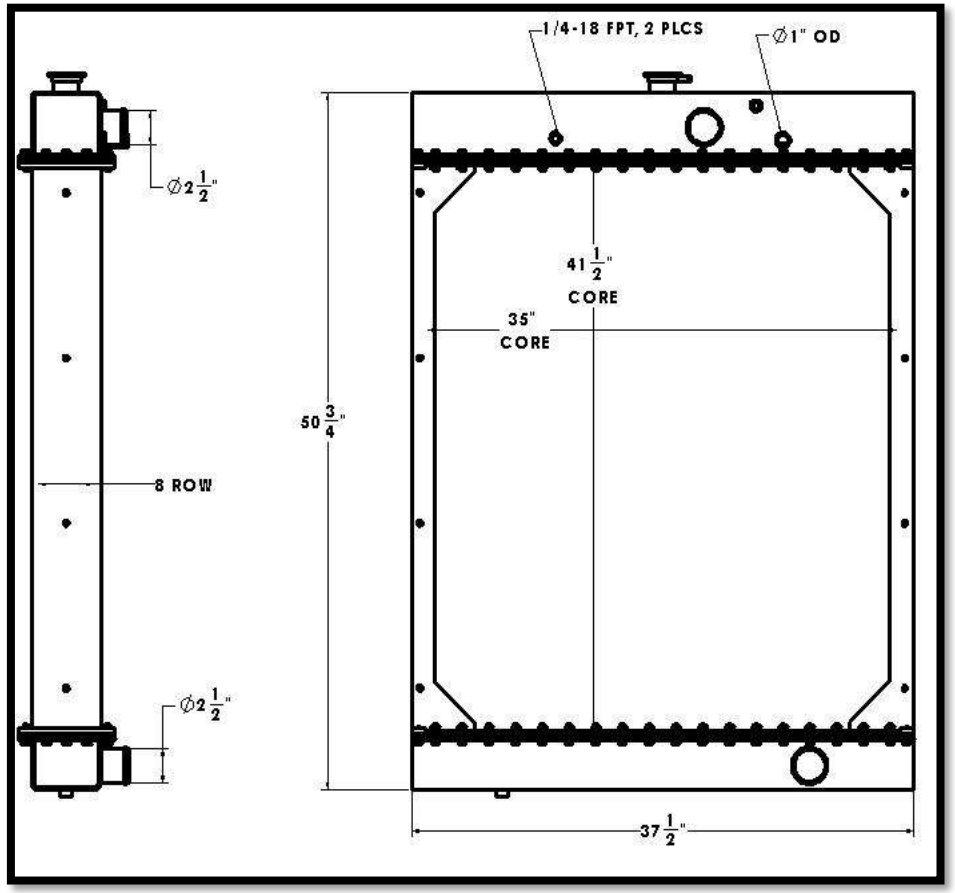

Overall Dimensions : 50-3/4” X 37-1/2” X 5-1/8”
Rad Core: 41-1/2” X 35” X 8 Row
Inlet: 2-1/2” OD, 2PL DEARAETION TANK
Outlet: 2-1/2” OD

Listed dimensions may vary slightly from OE

BGR Part Number: BT-0027-6Z
Cummins: CATERPILLAR

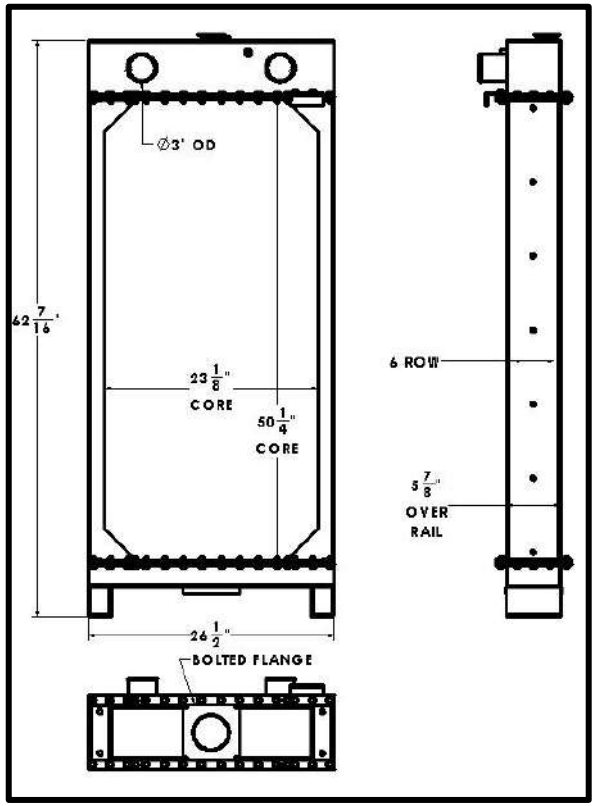

Overall Dimensions : 62-7/16” X 26-1/2” X 5-7/8”
Core: 501/4” X 23-1/8” X 6 Row
Inlet: 3” OD, 2PL
Outlet: Bolted Flange

Tel 1.800.774.2168
www.bgrradiator.com

BGR Part Number: BT-0028-4R
A-328687 Kohler 200ROZD

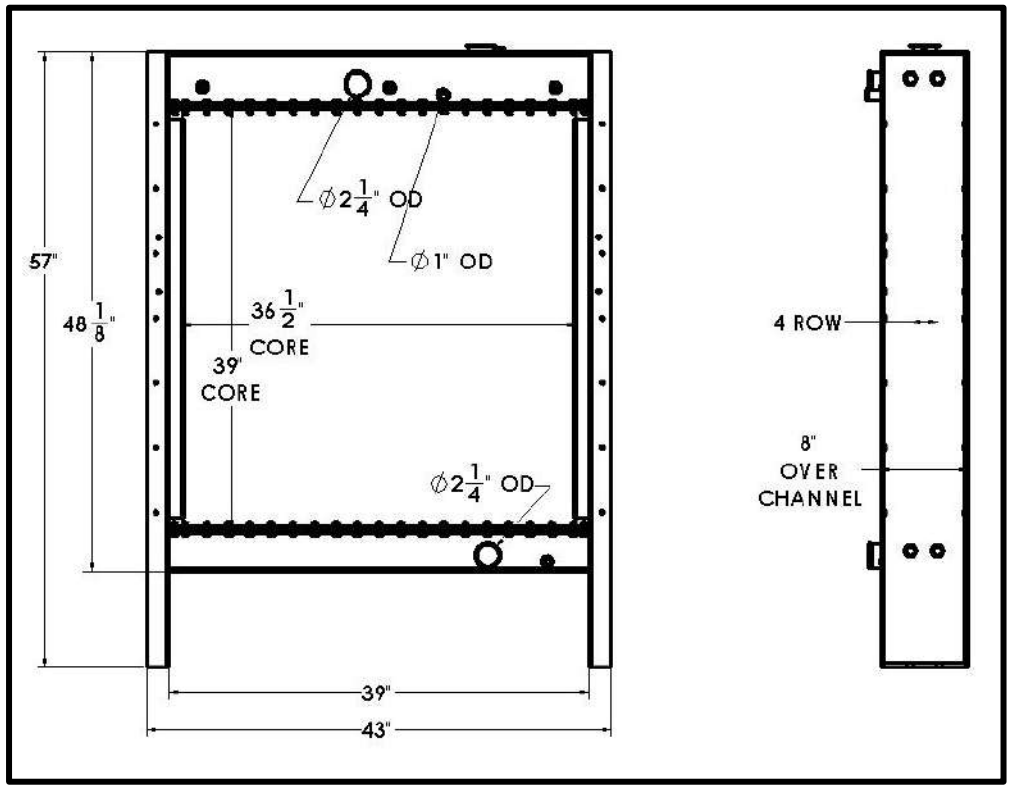

Overall Dimensions : 57” X 43” X 8”
Core: 39” X 36-1/2” X 4 Row
Inlet: 2-1/4” OD with Deaeration
Outlet: 2-1/4” OD

Listed dimensions may vary slightly from OE

BGR Part Number: BT-0029-7T
Perfex 90M69 V 29069 Cat D353 300kw

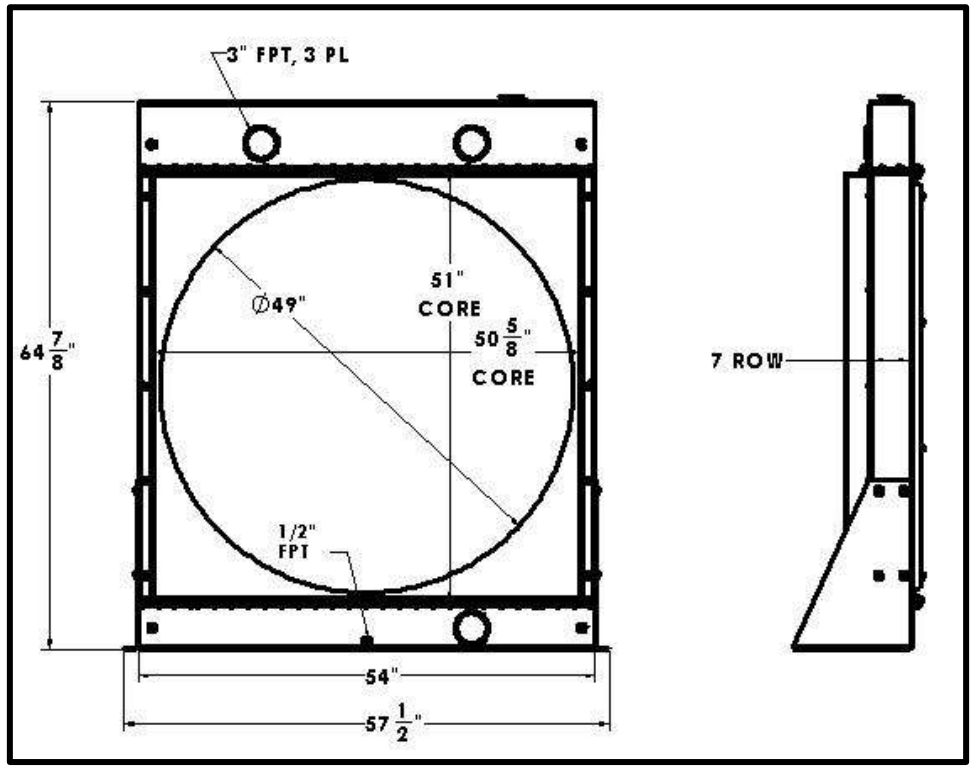

Overall Dimensions : 64-7/8” X 54” X 5-1/8”
Core: 51” X 50-5/8” X 7 Row
Inlet: 3” FPT, 2PL
Outlet: 3” FPT

Tel 1.800.774.2168
www.bgrradiator.com

BGR Part Number: BT-0030-7N
ONAN

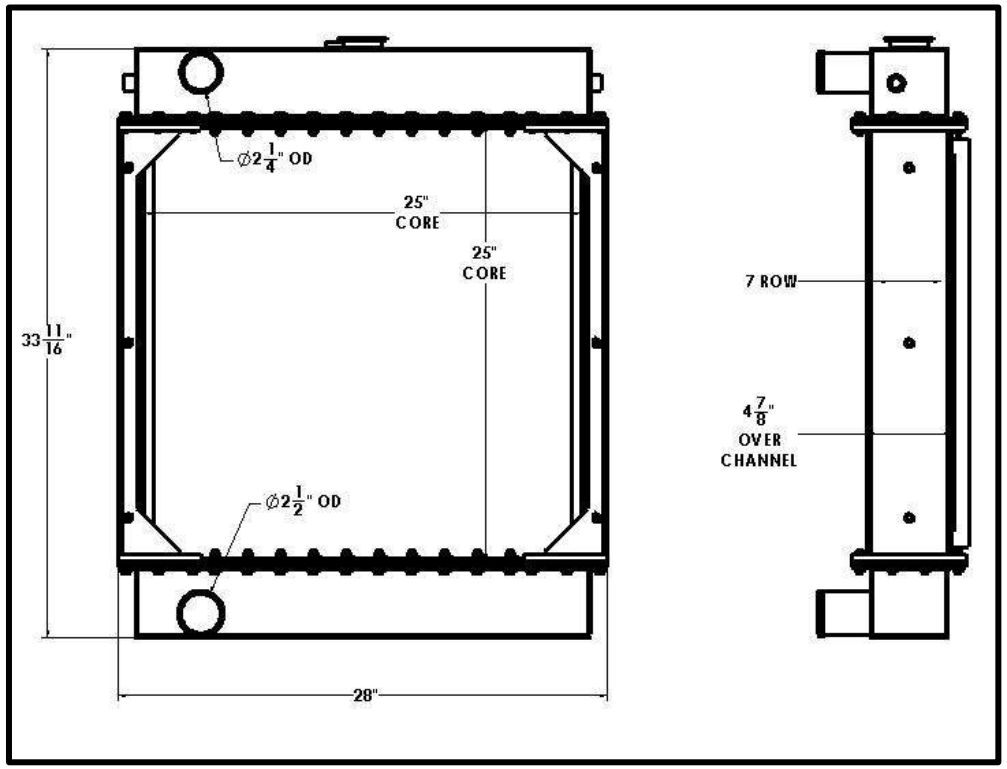

Overall Dimensions : 33-11/16” X 28” X 4-7/8”
Core: 25” X 25” X 7 Row
Inlet: 2-1/4” OD
Outlet: 2-1/2” OD

Listed dimensions may vary slightly from OE

BGR Part Number: BT-0031-6Z
CATERPILLAR

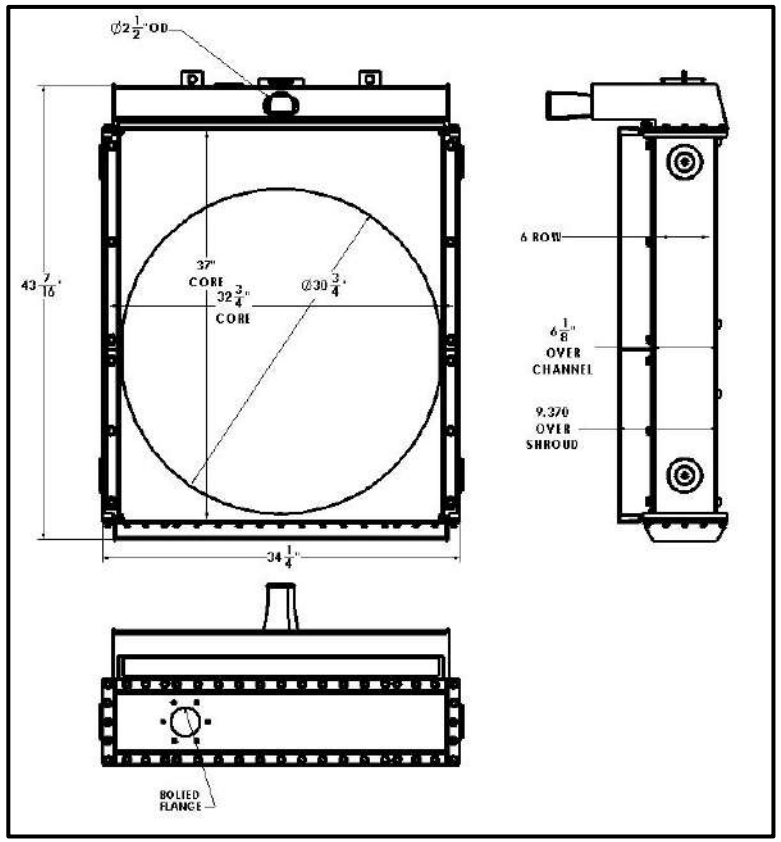

Overall Dimensions : 43-7/16” X 34-1/4” X 6-1/8”
Core: 37” X 32-3/4” X 6 ROW
Inlet: 2-1/2” OD
Outlet: BOLTED FLANGE

Tel 1.800.774.2168
www.bgrradiator.com

BGR Part Number: BT-0032-8I
OEM: FERMONT GENSET, G&O PN 291 505L2

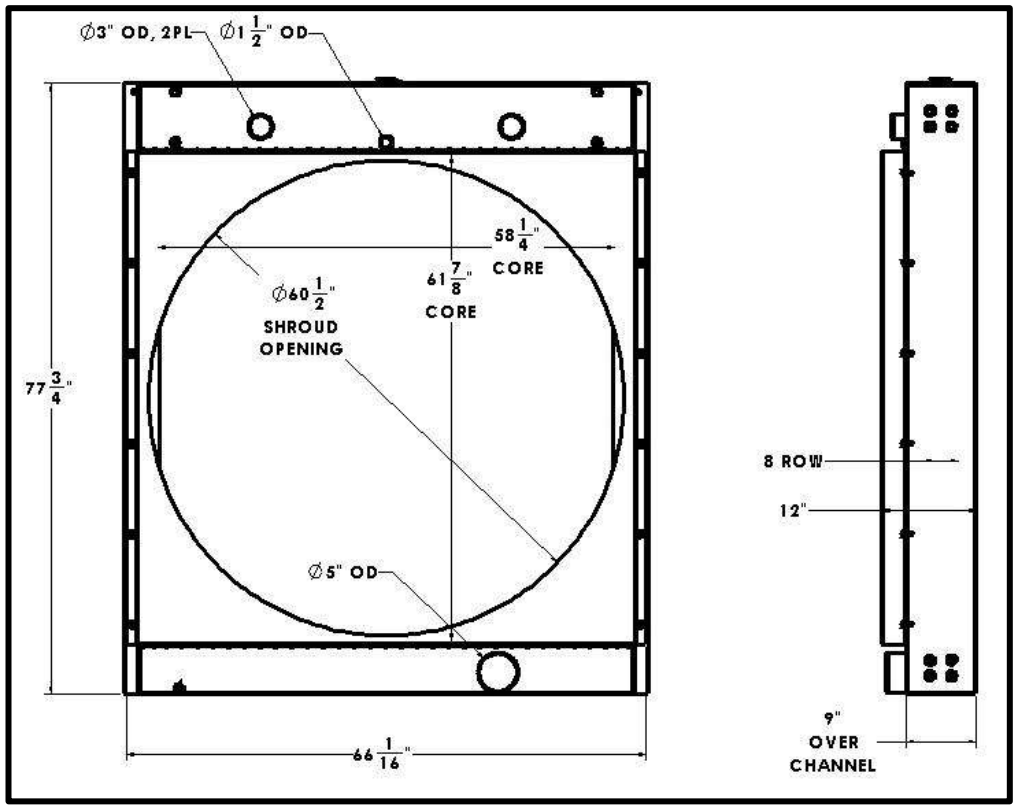

Overall Dimensions : 77-3/4” X 66-1/16” X 9”
Core: 61-7/8” X 58-1/4” X 8 Row
Inlet: 3” OD (2 Places)
Outlet: 5” OD

Listed dimensions may vary slightly from OE

BGR Part Number: BT-0033-7R
OEM: Elliot Magnetek 125 RD 125KW GENSET

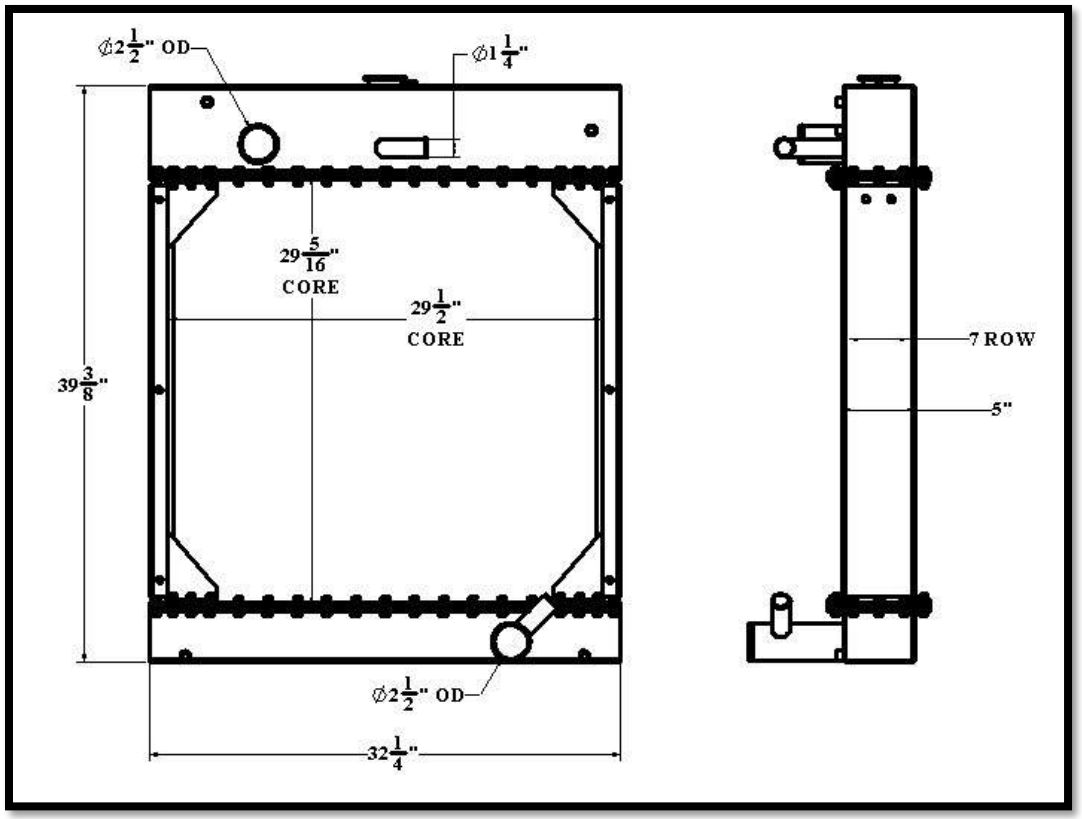

Overall Dimensions : 39-3/8” X 32-1/4” X 5”
Core: 29-5/16” X 29-1/2” X 7 Row
Inlet: 2-1/2” OD
Outlet: 2-1/2” OD

Tel 1.800.774.2168
www.bgrradiator.com

BGR Part Number: BT-0034-8I
OEM: G&O PN N290 501L02

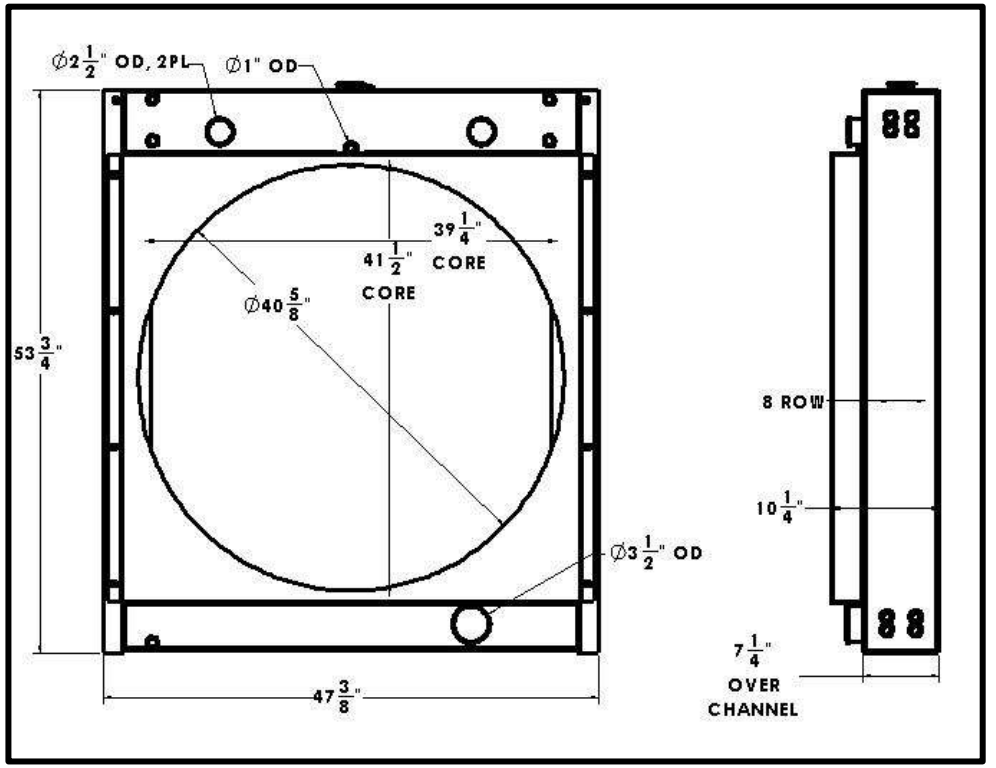

Overall Dimensions : 53-3/4” X 47-3/8” X 7-1/4”
Core: 41-1/2” X 39-1/4” X 8 Row
Inlet: 2-1/2” OD, 2PL DEAERATION TANK
Outlet: 3-1/2” OD

Listed dimensions may vary slightly from OE

BGR Part Number: BT-0035 7R
ONAN Part Number: 130-4354

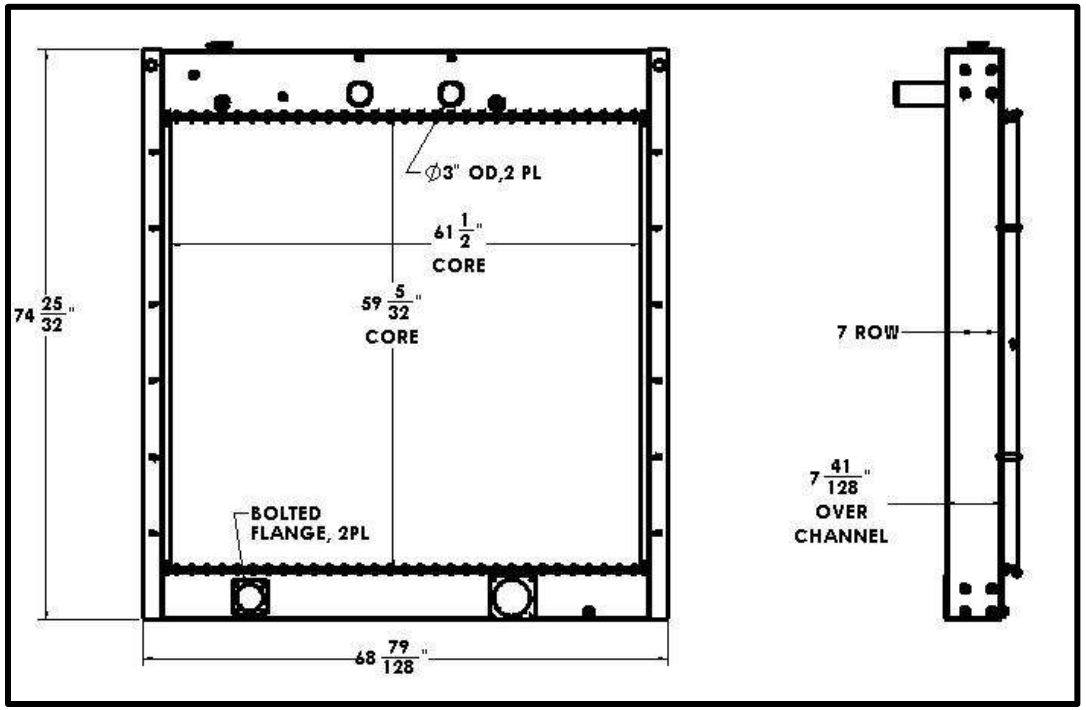

Overall Dimensions : 74-25/32” X 68-79/128” X 7-5/16”
Core: 59-5/32” X 61-1/2” X 7 Row
Inlet: 3” OD, 2PL
Outlet: BOLTED FLANGE

Tel 1.800.774.2168
www.bgrradiator.com

BGR Part Number: BT-0036-6Z
CUMMINS GENSET

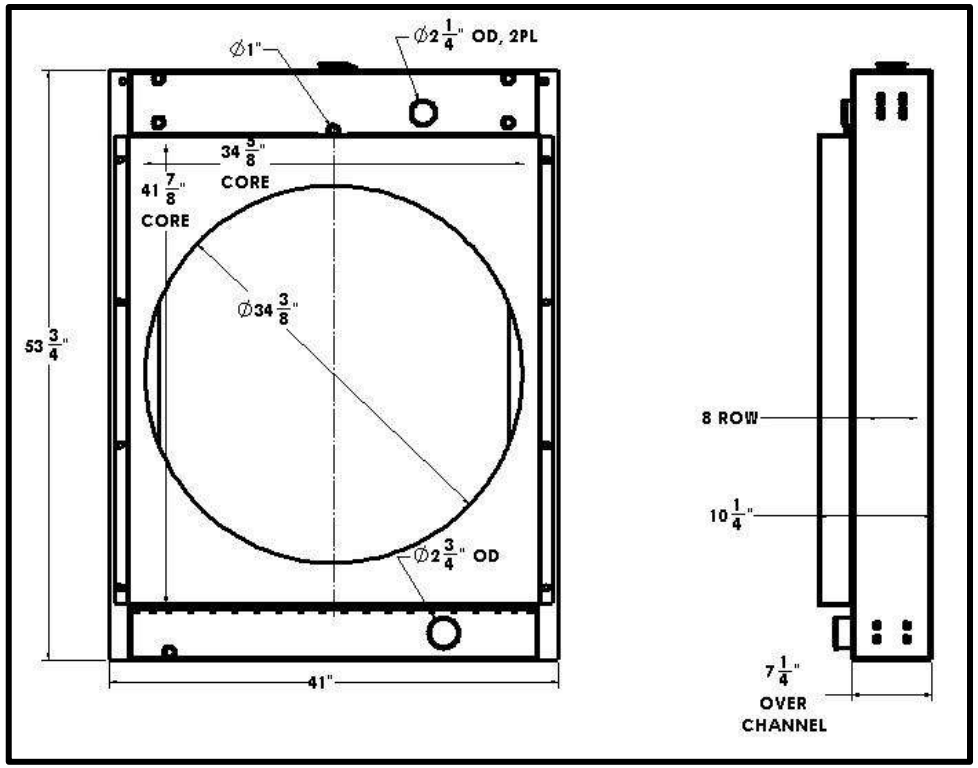

Overall Dimensions : 53-3/4” X 41” X 7-1/4”
Core: 41-7/8” X 34-5/8” X 8 Row
Inlet: 2-1/4” OD DEAERATION TANK
Outlet: 2-3/4” OD

Listed dimensions may vary slightly from OE

BGR Part Number: BT-0037-5Z
A274274 1A15503D

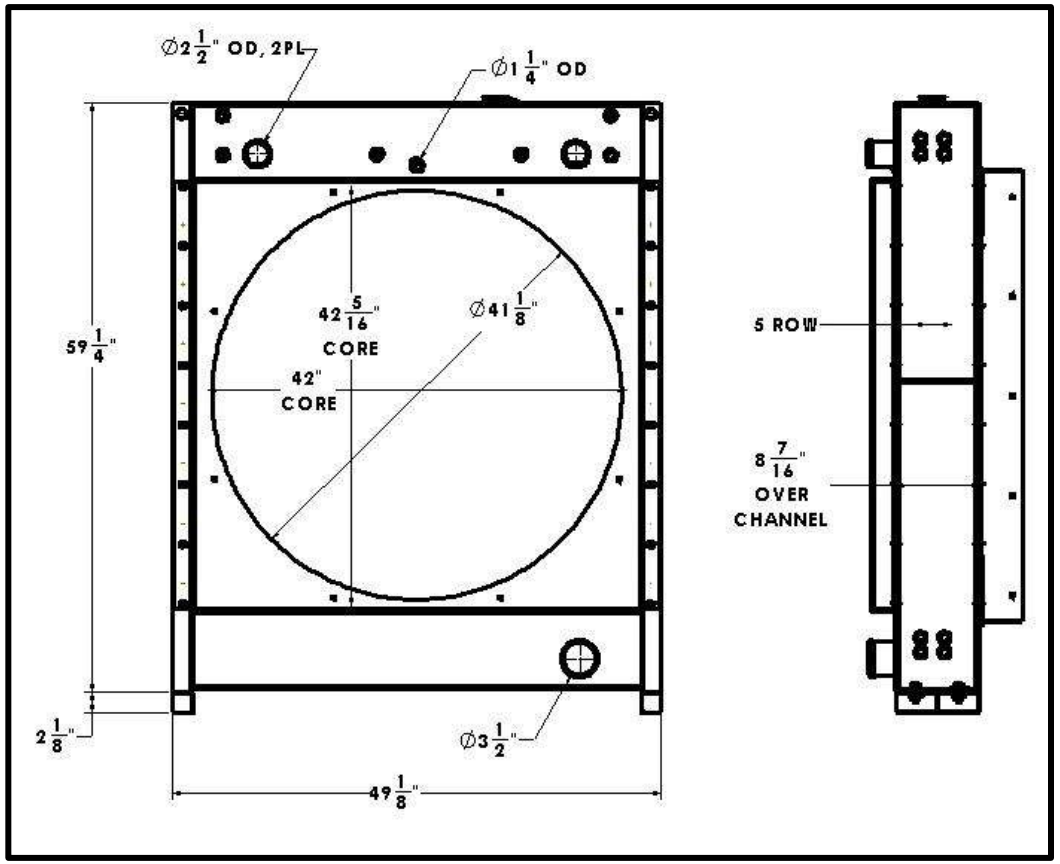

Overall Dimensions : 61-3/8” X 49-1/8” X 8-7/16”
Core: 42-5/16” X 42” X 5 Row
Inlet: 2-1/2” OD, 2PL DEARAETION TANK
Outlet: 3-1/2” OD

Tel 1.800.774.2168
www.bgrradiator.com

BGR Part Number: BT-0038-5Z
1A15503

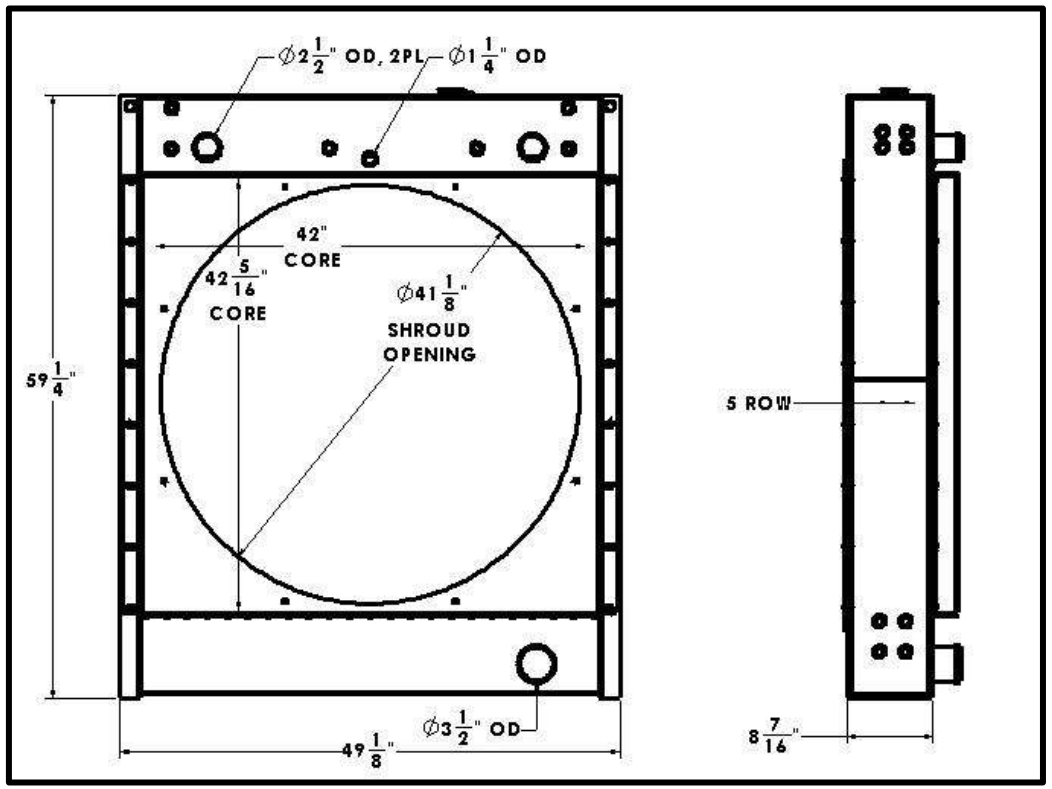

Overall Dimensions : 59-1/4” X 49-1/8” X 8-7/16”
Core: 42-5/16” X 42” X 5 Row
Inlet: 2-1/2” OD, 2PL DEARAETION TANK
Outlet: 3-1/2” OD

Listed dimensions may vary slightly from OE

BGR Part Number: BT-0039-7I
G&O X-6290 AFTERCOOLER FOR CUMMINS

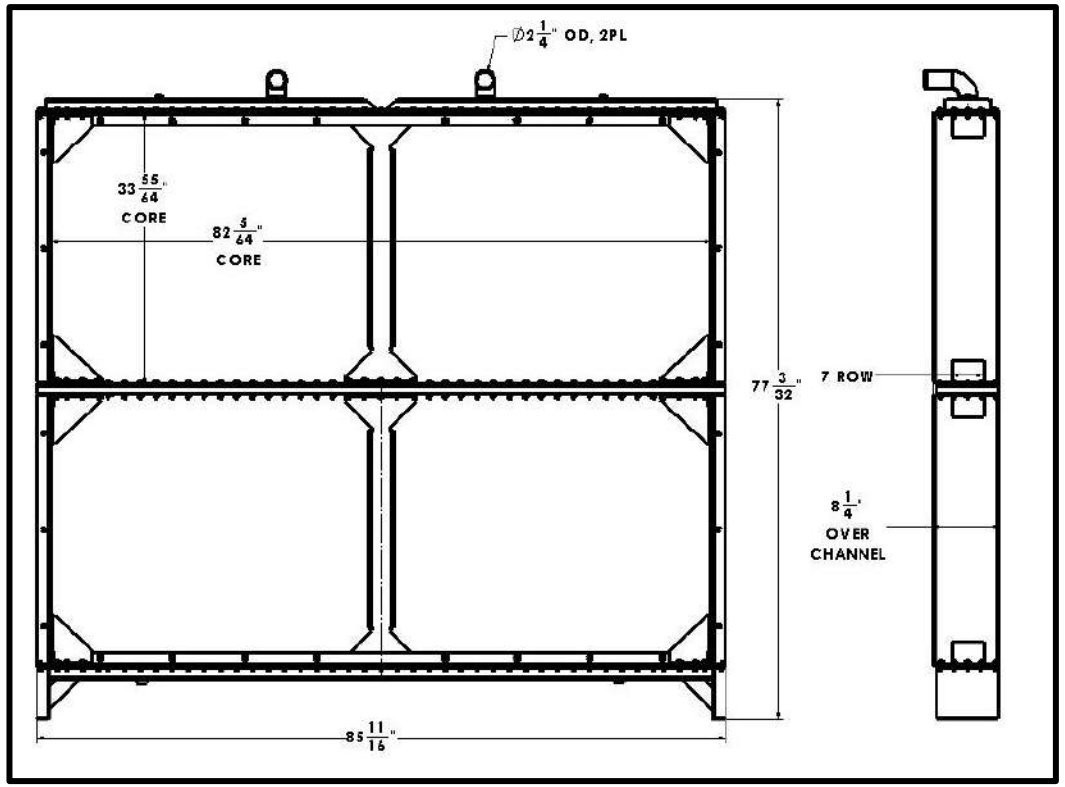

Overall Dimensions : 77-3/32” X 85-11/16” X 8-1/4”
Core: 33-55/64” X 82-5/64” X 7 Row (2 CORE SECTIONS)
Inlet: 2-1/4” OD
Outlet: 2-1/4” OD

Tel 1.800.774.2168
www.bgrradiator.com

BGR Part Number: BT-0040-8R
1542JJ

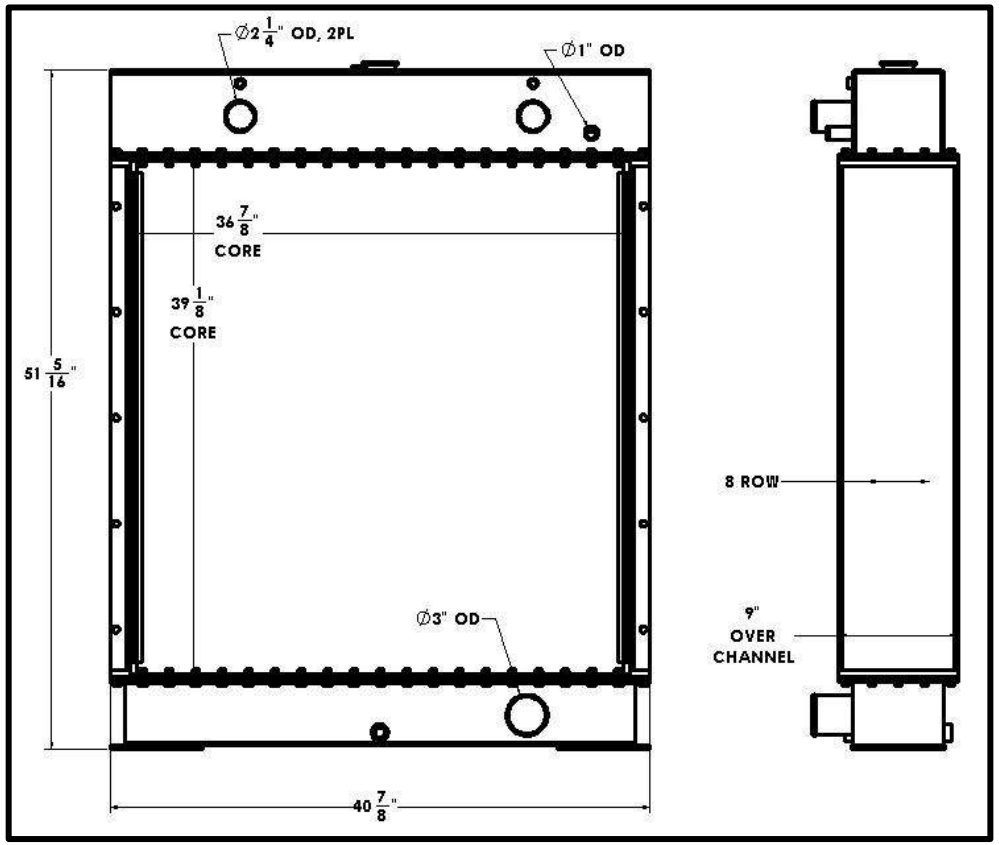

Overall Dimensions : 51-5/16” X 40-7/8” X 9”
Core: 39-1/8” X 36-7/8” X 8 Row
Inlet: 2-1/4” OD, 2PL DEARAETION TANK
Outlet: 3” OD

Listed dimensions may vary slightly from OE

BGR Part Number: BT-0041-6I
CUMMINS 855, 1A12423, 030689, A280993

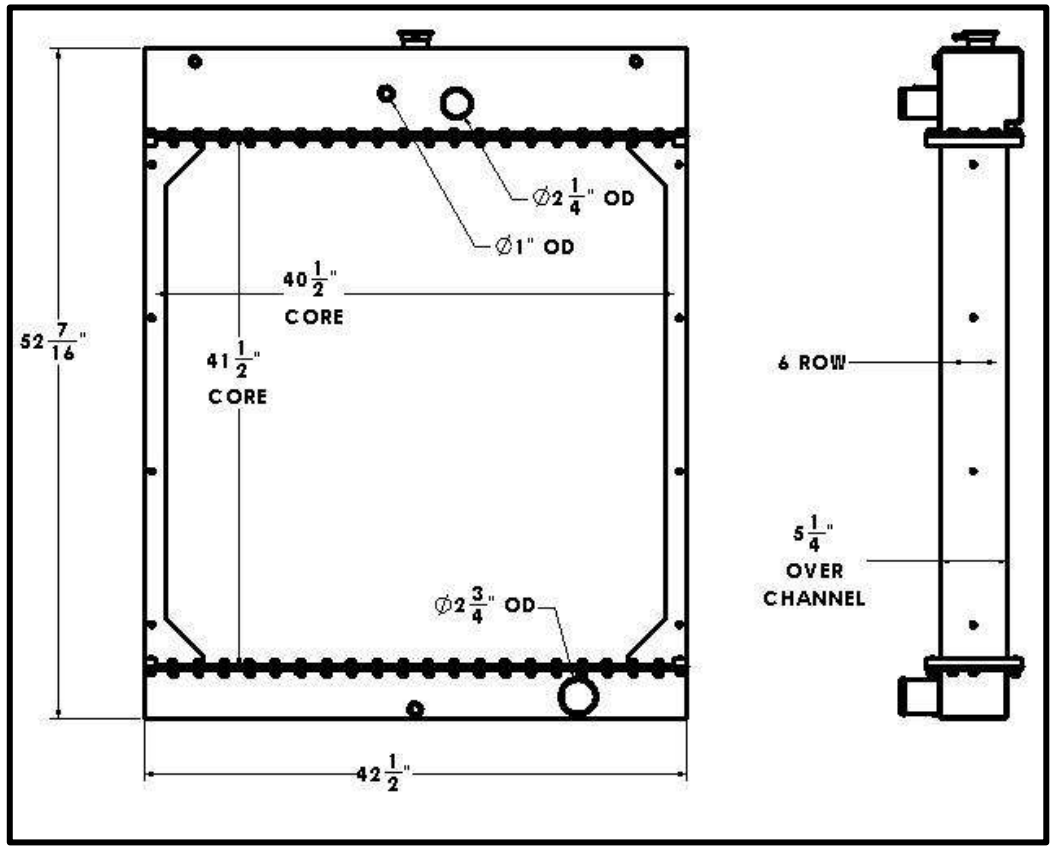

Overall Dimensions: 52-7/16 ” X 42-1/2” X 5-1/4”
Core: 41-1/2” X 40-1/2” X 6 Row
Inlet: 2-1/4” OD
Outlet: 2-3/4” OD

Tel 1.800.774.2168
www.bgrradiator.com

BGR Part Number: BT-0042-4I5I
MODINE 1A18331 revised 3/10/2016, A-361593

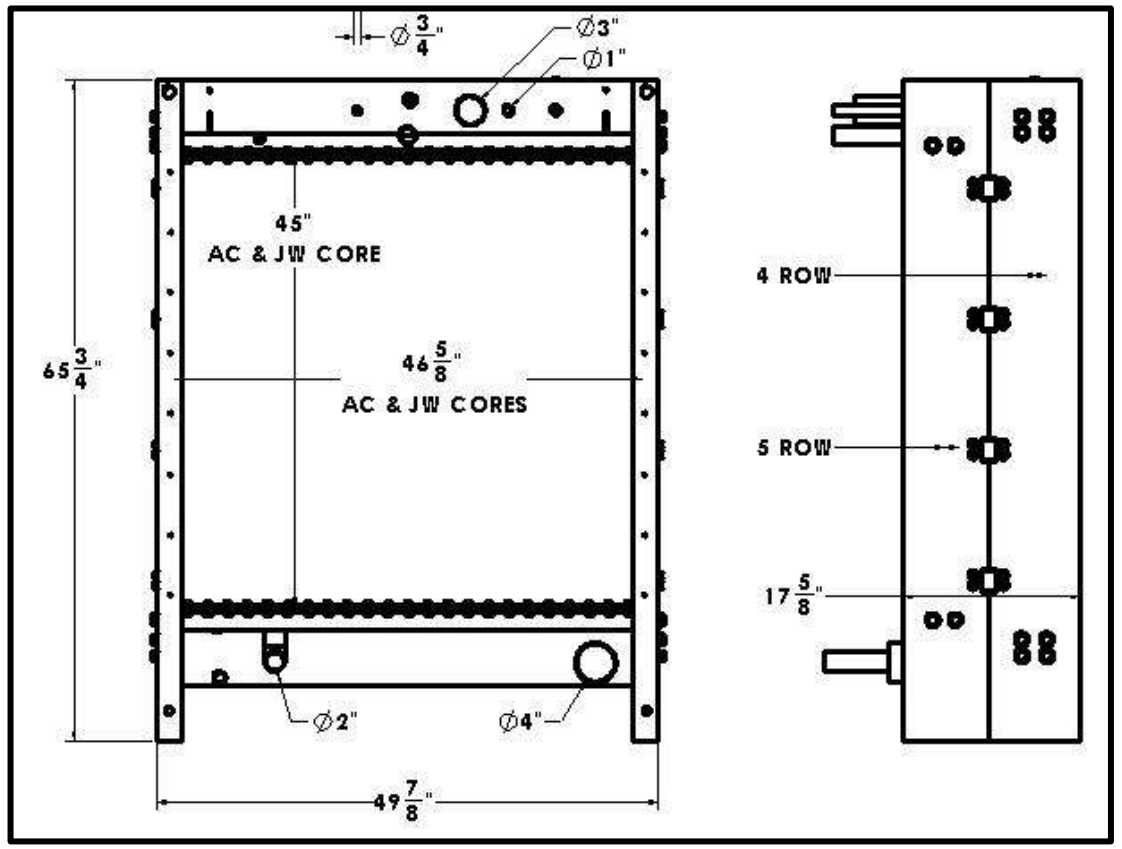

Overall Dimensions : 65-3/4” X 49-7/8” X 17-5/8”
AC Core: 45” X 46-5/8” X 5 Row
JW Core: 45” X 46-5/8” X 4 Row
AC Inlet/Outlet: 2” OD
JW Inlet 3”, JW Outlet: 4” OD

Listed dimensions may vary slightly from OE

BGR Part Number: BT-0043-6I
Modine EK3-10 1A9953D

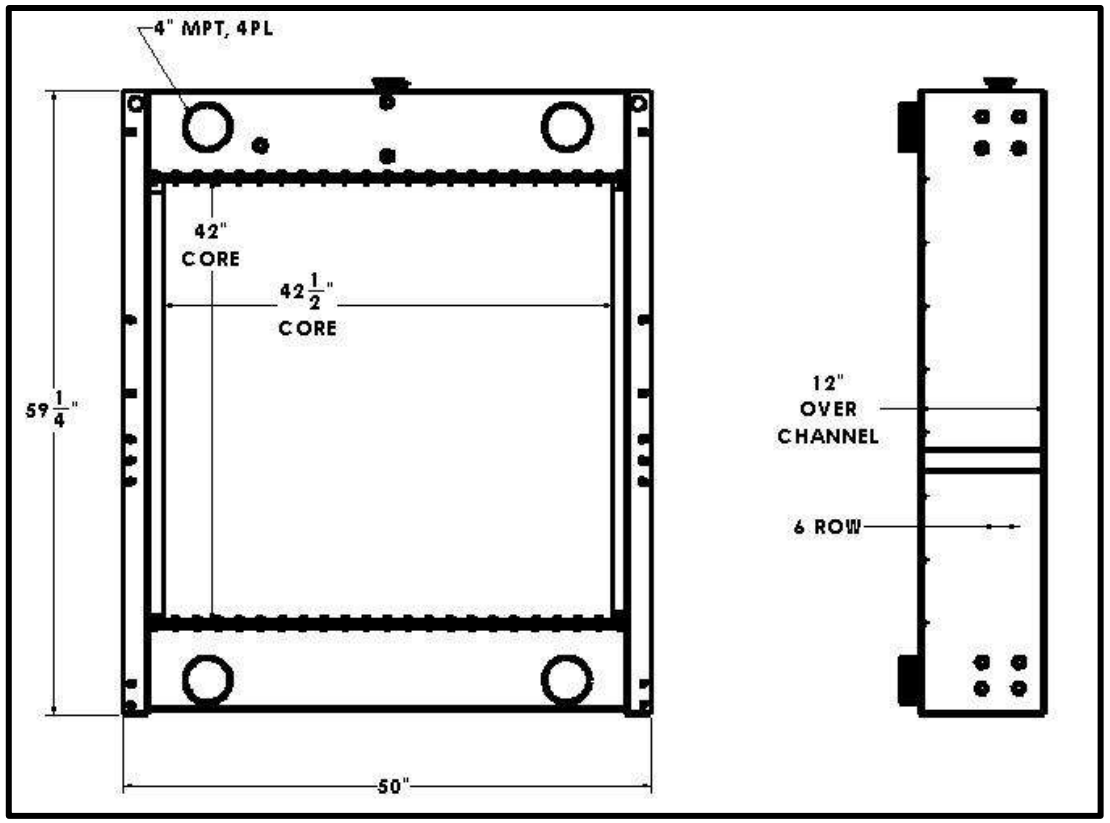

Overall Dimensions: 59-1/4 ” X 50” X 12”
Core: 42” X 42-1/2” X 6 Row
Inlet: 4” MPT, 2PL
Outlet: 4” MPT, 2PL

Tel 1.800.774.2168
www.bgrradiator.com

BGR Part Number: BT-0044-7I
KOHLER GENSET

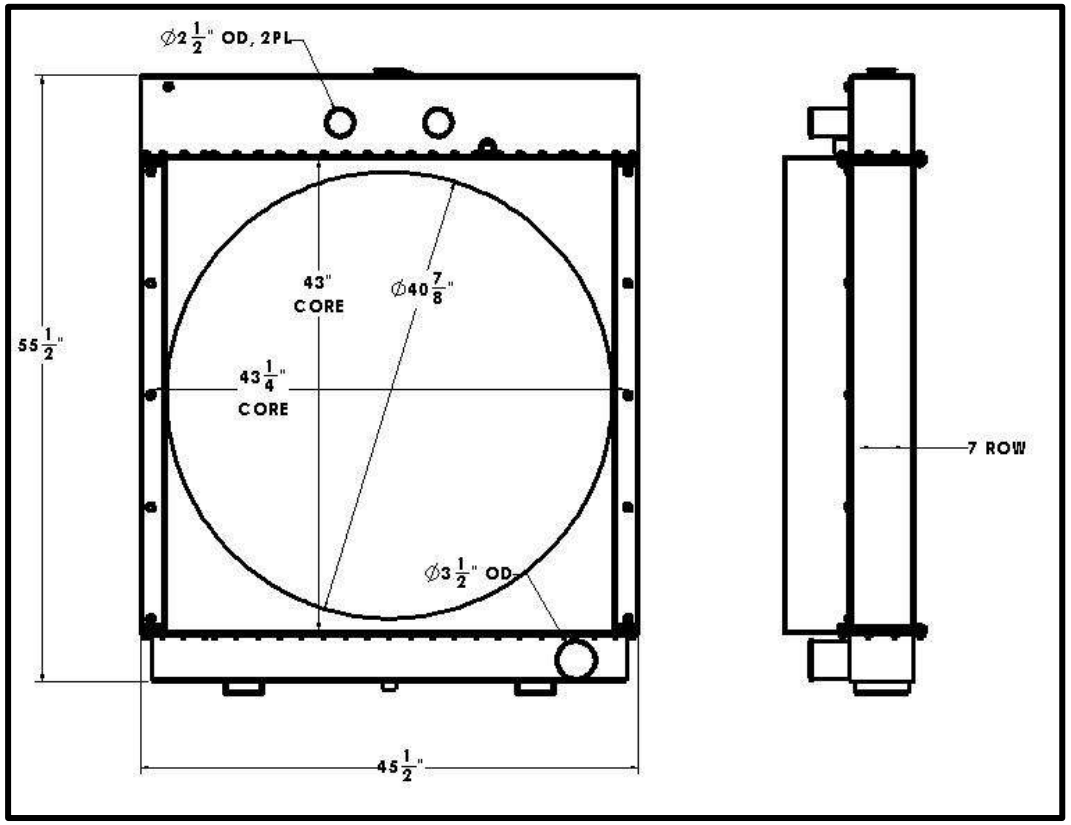

Overall Dimensions : 55-1/2” X 45-1/2”
Core: 43” X 43-1/4” X 7 Row
Inlet: 2-1/2” 2PL
Outlet 3-1/2”

Listed dimensions may vary slightly from OE

BGR Part Number: BT-0045-4I5I
ONAN PART NUMBER 130-5692, QST30-G5

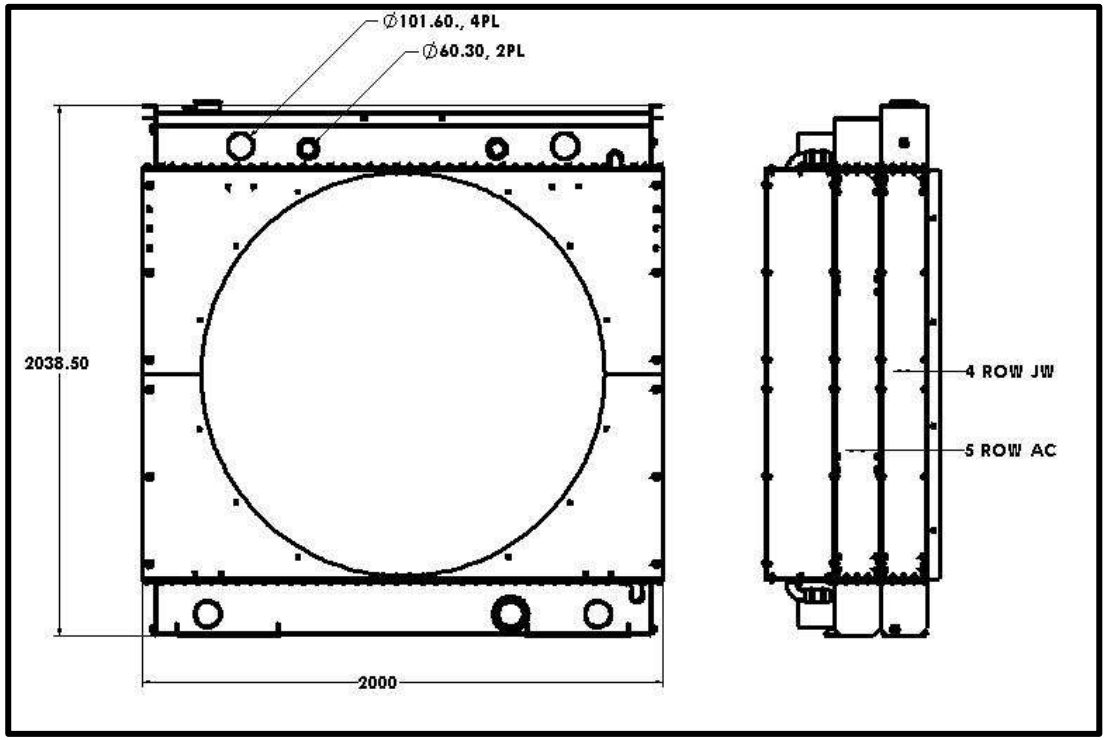

Overall Dimensions: 2038.5MM X 2000MM”
CAC Core: 1575MM X 1900MM X 5 Row
JW Core: 1575MM X 1900MM X 4 Row
CAC Inlet/Outlet: 4” OD
JW Inlet: 2-3/8” 2PL
JW Outlet: 4” OD

Tel 1.800.774.2168
www.bgrradiator.com

BGR Part Number: BT-0046-4R
CATERPILLAR PN 179-0728 REV 07

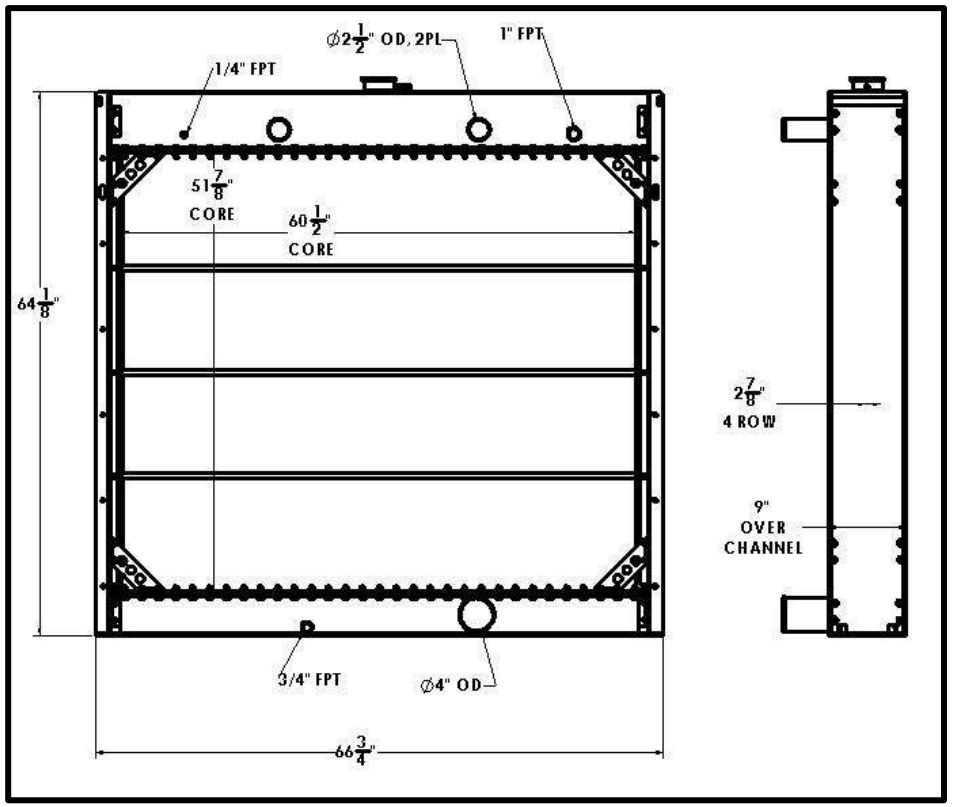

Overall Dimensions : 64-1/8” X 66-3/4” X 9”
Core: 51-7/8” X 60-1/2” X 4 Row
Inlet: 2-1/2” 2PL
Outlet 4”

Listed dimensions may vary slightly from OE

BGR Part Number: BT-0047-8I
Perfex OV33-RA

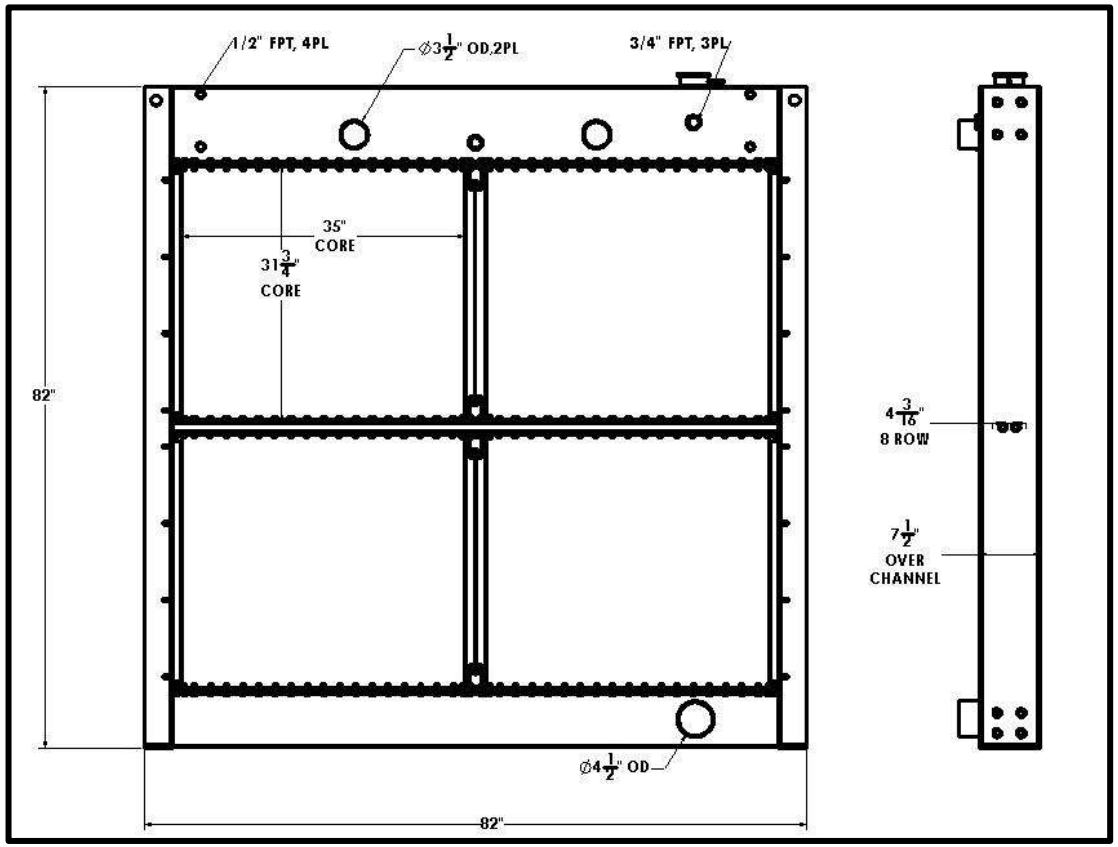

Overall Dimensions: 82” X 82” X 7-1/2”
Core: 31-3/4” X 35” X 8 Row (4 SECTIONS)
Inlet: 3-1/2” OD, 2PL
Outlet: 4-1/2” OD

Tel 1.800.774.2168
www.bgrradiator.com

BGR Part Number: BT-0048-5R
130-4355

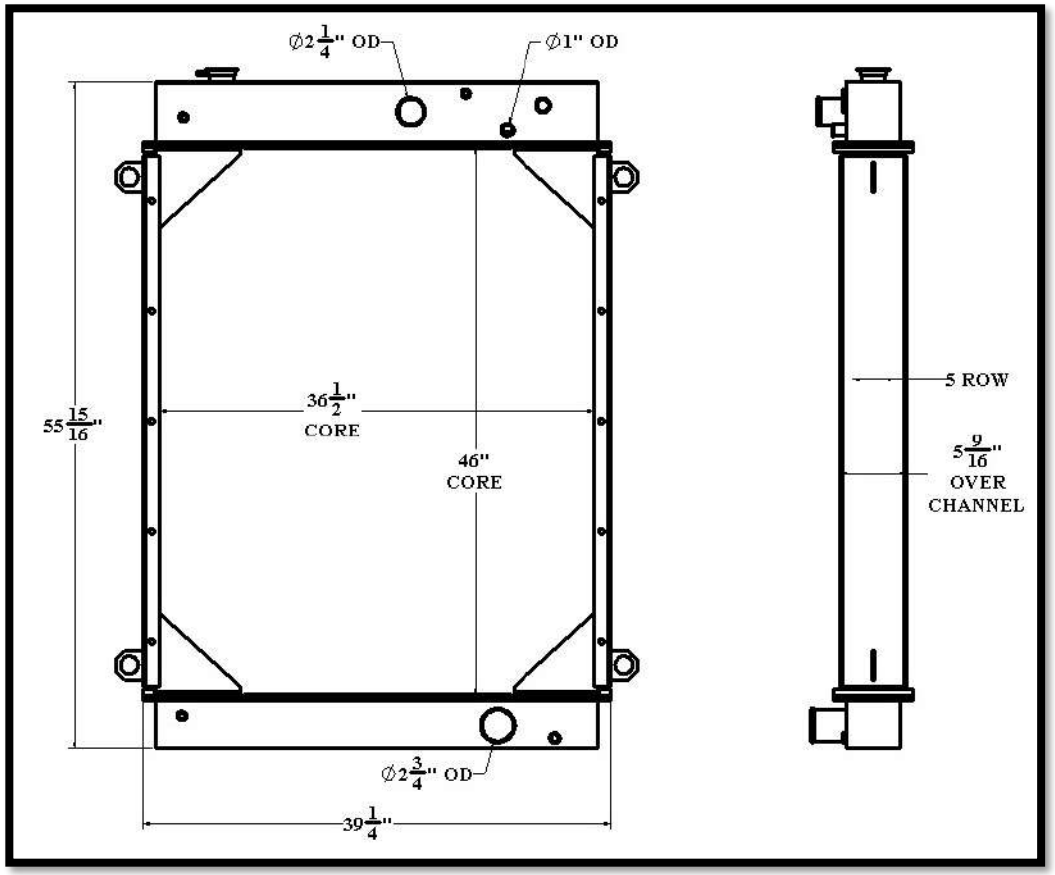

Overall Dimensions: 55-15/16” X 39-1/47” X 5-9/16”
Core: 46 X 36-1/2” X 5 ROW
Inlet: 2-1/4” OD, 1” OD
Outlet: 2-3/4” OD

Listed dimensions may vary slightly from OE

BGR Part Number: BT-0049-5I
A-291704

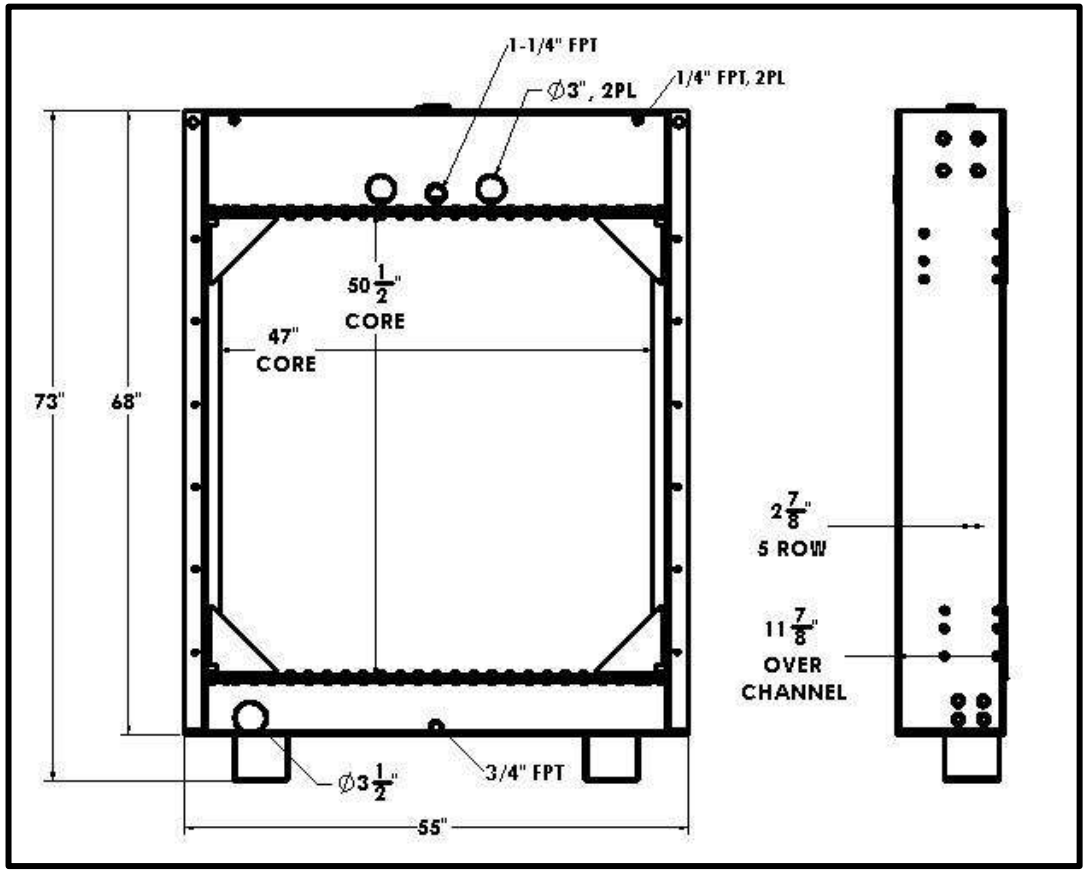

Overall Dimensions: 73” X 55” X 11-7/8”
Core: 50-1/2” X 47” X 5 Row
Inlet: 3” OD, 2PL
Outlet: 3-1/2” OD

Tel 1.800.774.2168
www.bgrradiator.com

BGR Part Number: BT-0050-3I
Olympian Genset D200P4_1 w/Int'l GCD325

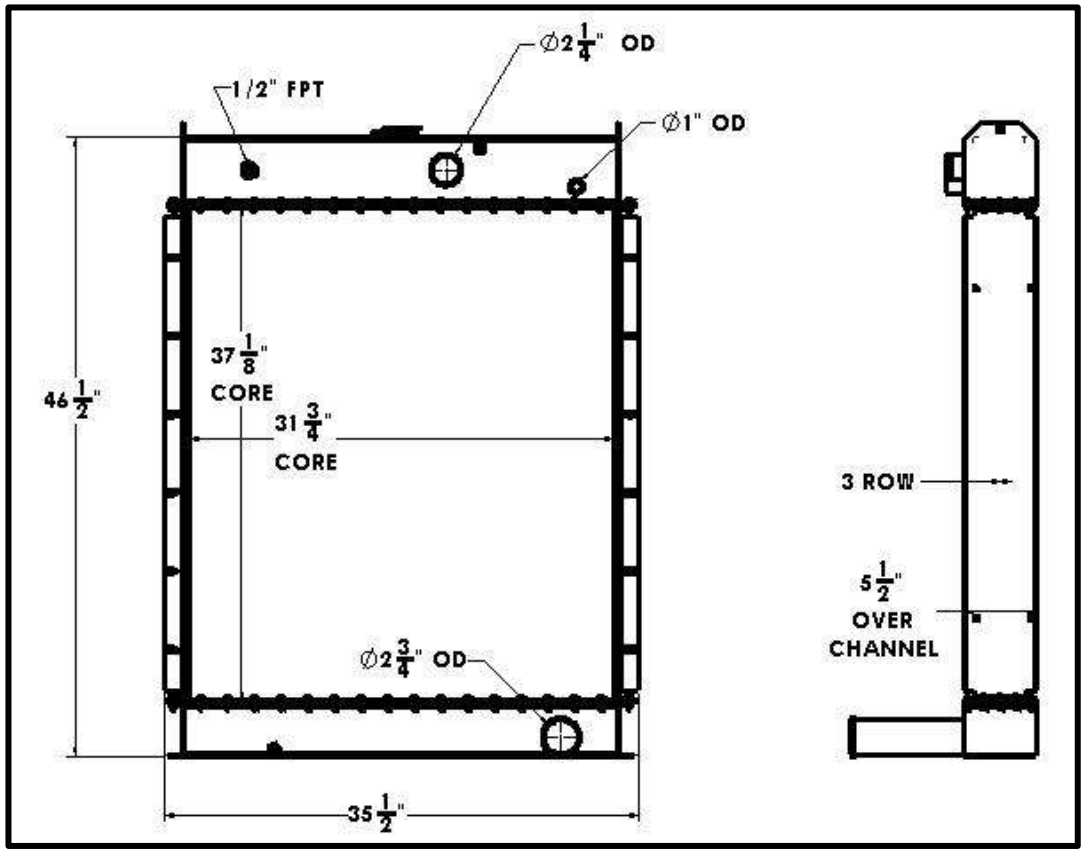

Overall Dimensions : 46-1/2” X 35-1/2” X 5-1/2”
Core: 37-1/8” X 31-3/4” X 3 Row
Inlet: 2-1/4”
Outlet 2-3/4”

Listed dimensions may vary slightly from OE

BGR Part Number: BT-0051-4T
Detroit 6063-TH35, Generac IDLC400-D

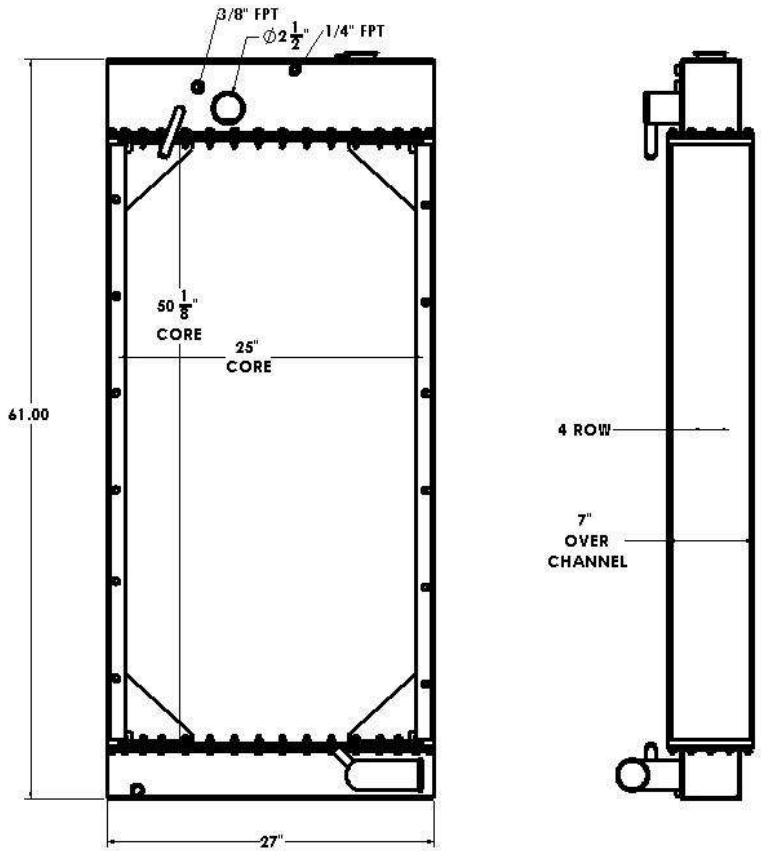

Overall Dimensions: 61” X 27” X 7”
Core: 50-1/8” X 25” X 4 Row
Inlet: 2-1/2” OD DEAERATED TOP TANK
Outlet: 2-1/2” OD

Tel 1.800.774.2168
www.bgrradiator.com

BGR Part Number: BT-0052-3I
Olympian BW 560000001, 120-455

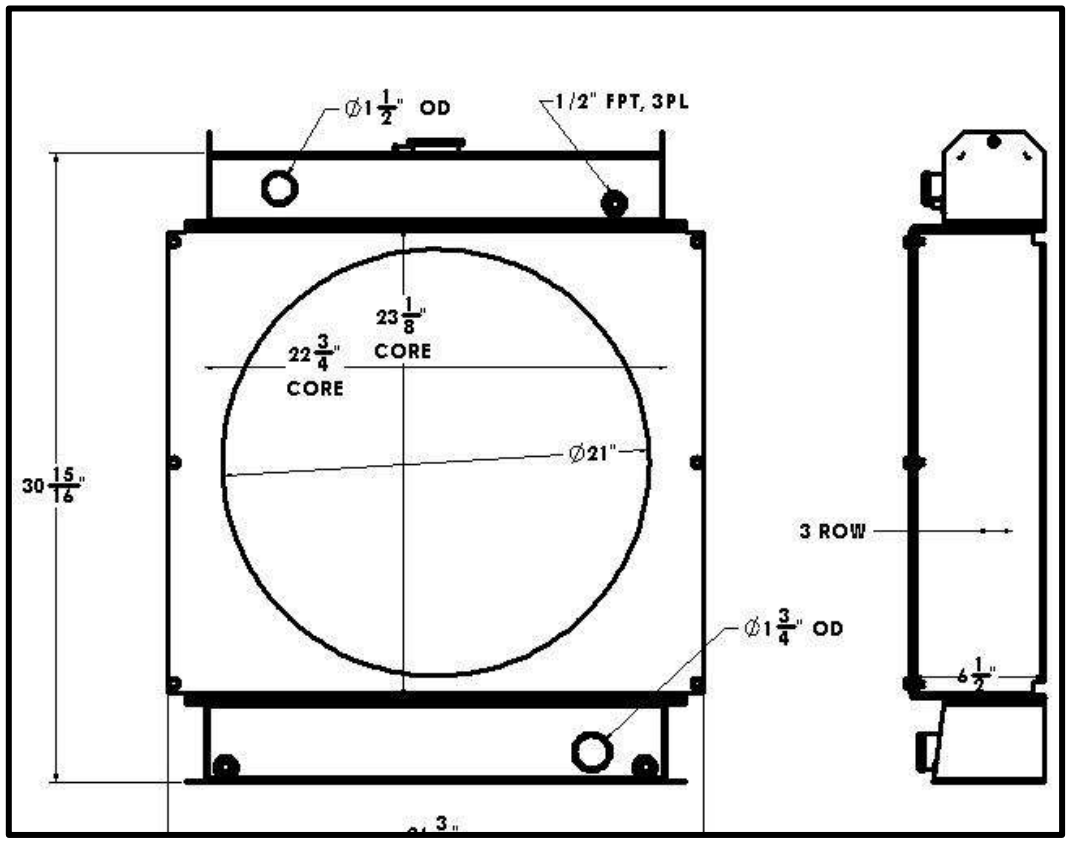

Overall Dimensions : 30-15/16” X 26-3/8” X 6-1/2”
Core: 23-1/8” X 22-3/4” X 3 Row
Inlet: 1-1/2”
Outlet 1-3/4”

Listed dimensions may vary slightly from OE

BGR Part Number: BT-0053-7N
Modine FK3-8 1A12371

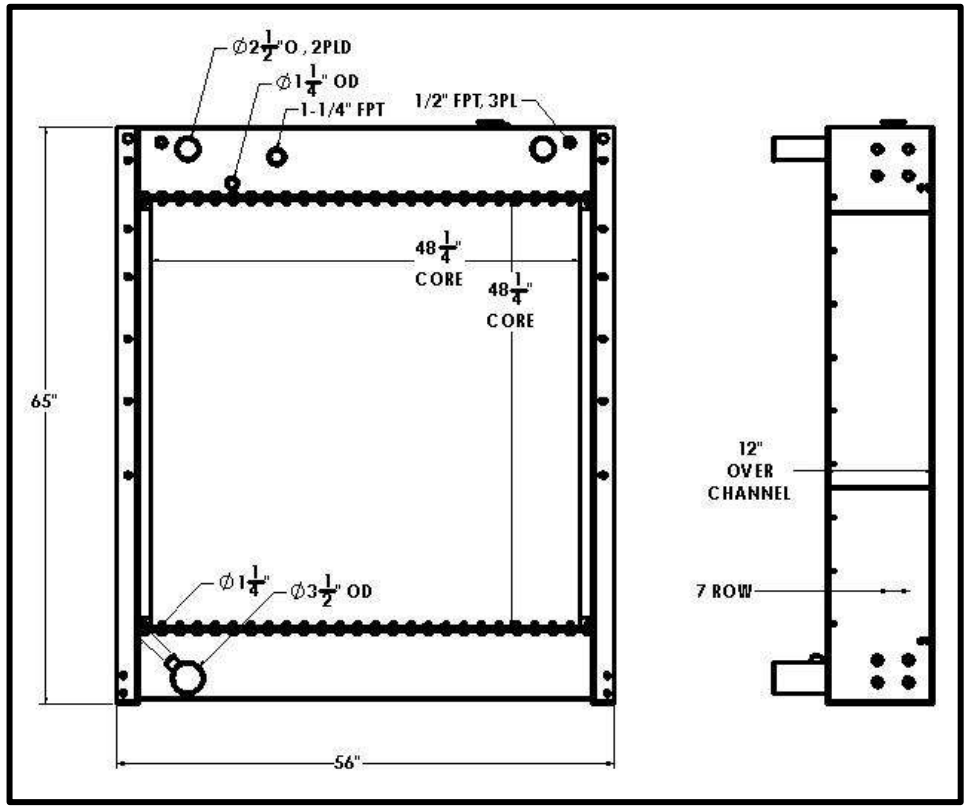

Overall Dimensions: 65” X 56” X 12”
Core: 48-1/4” X 48-1/4” X 7 Row
Inlet: 2-1/2” OD, 2PL
Outlet: 3-1/2” OD

Tel 1.800.774.2168
www.bgrradiator.com

BGR Part Number: BT-0054-6I
MODINE 1A15778, A-272616

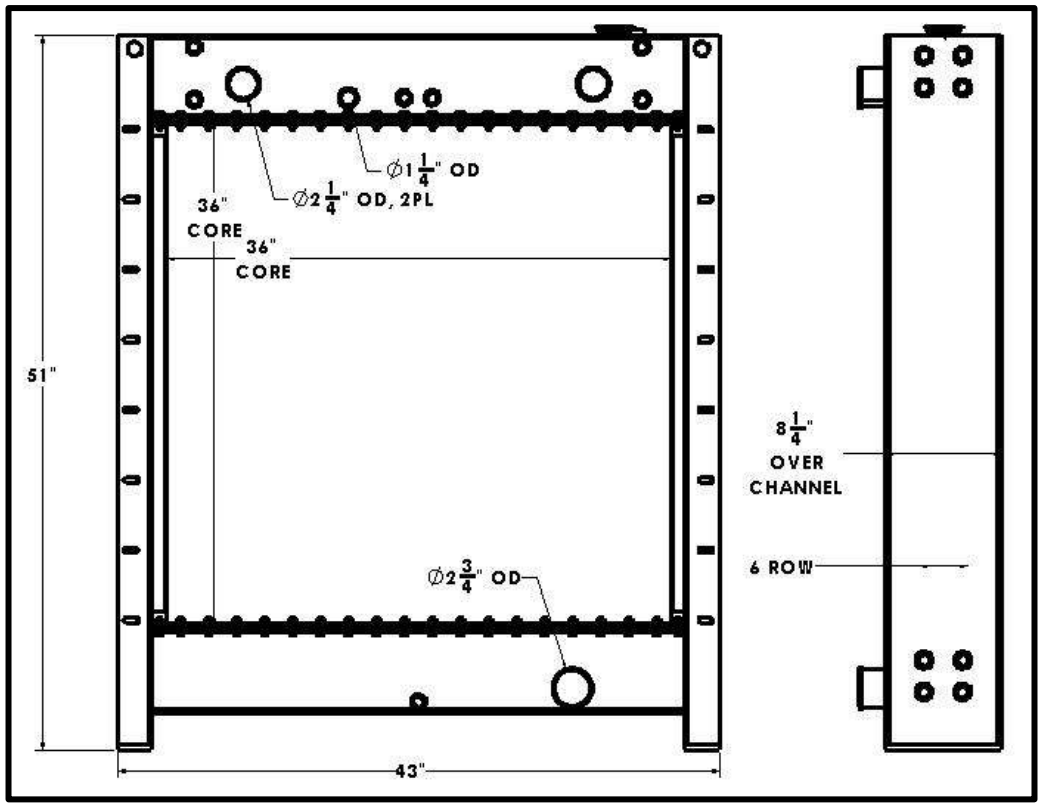

Overall Dimensions: 51” X 43” X 8-1/4”
Core: 36” X 36” X 6 Row
Inlet: 2-1/4” OD, 2PL
Outlet: 2-3/4” OD

Listed dimensions may vary slightly from OE

BGR Part Number: BT-0055-3I
Bear W 55273.0241, REF NO 120-030

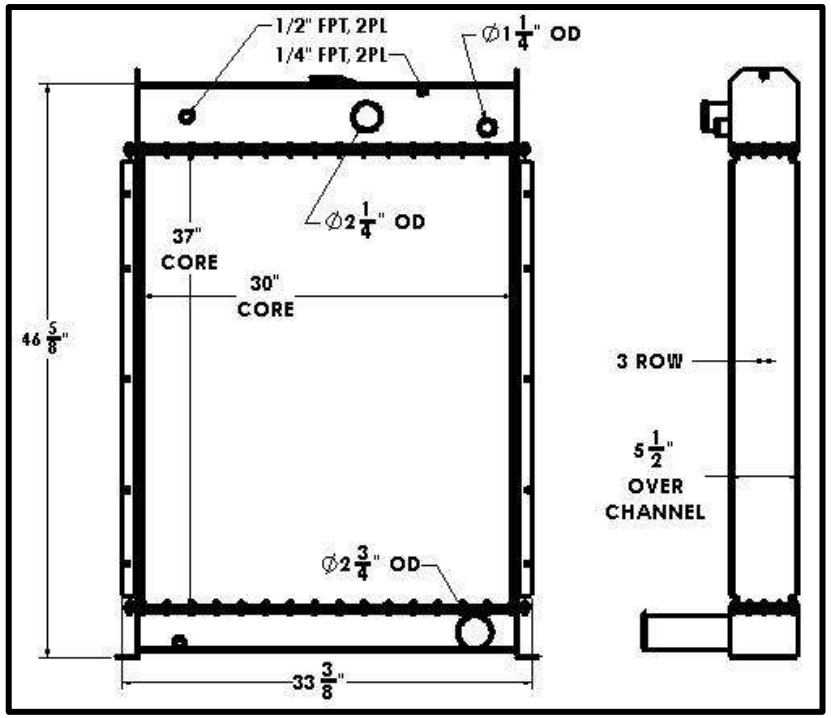

Overall Dimensions: 46-5/8” X 33-3/8” X 5-1/2”
Core: 37” X 30” X 3 Row
Inlet: 2-1/4” OD,
Outlet: 3-3/4” OD

Tel 1.800.774.2168
www.bgrradiator.com

BGR Part Number: BT-0056-8I
Modine M-30-FB SP02457

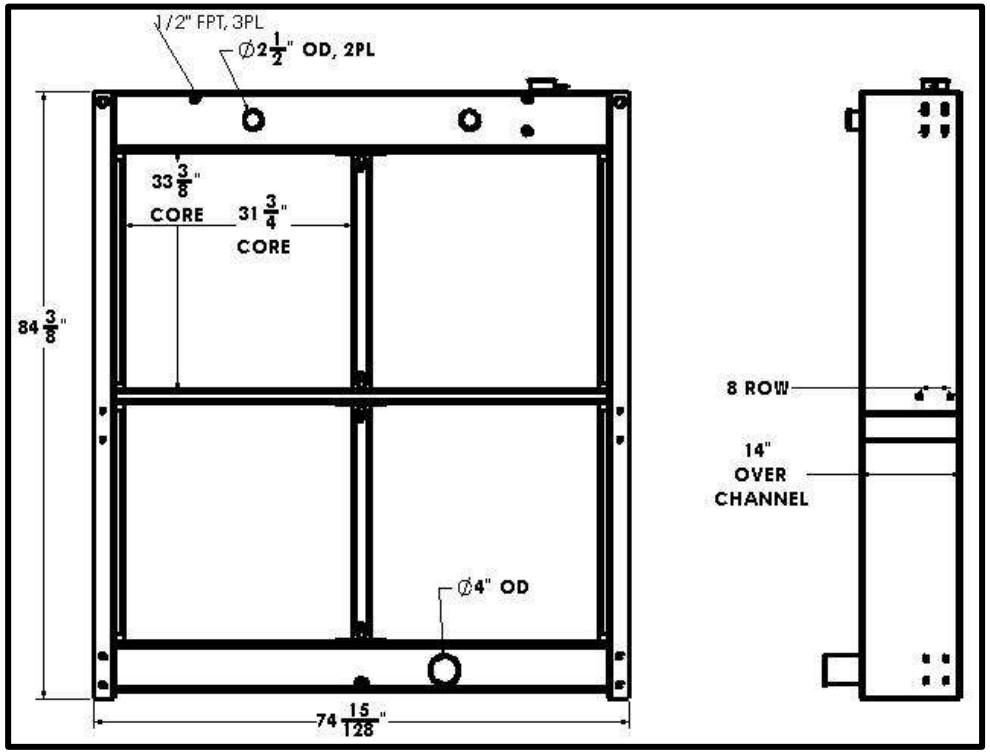

Overall Dimensions: 84-3/8” X 74.12” X 14”
Core: 33-3/8” X 31-3/4” X 8 Row
Inlet: 2-1/2” OD, 2PL
Outlet: 4” OD

Listed dimensions may vary slightly from OE

BGR Part Number: BT-0057-4I
Olympian 5655700001, 120-549, 120-456

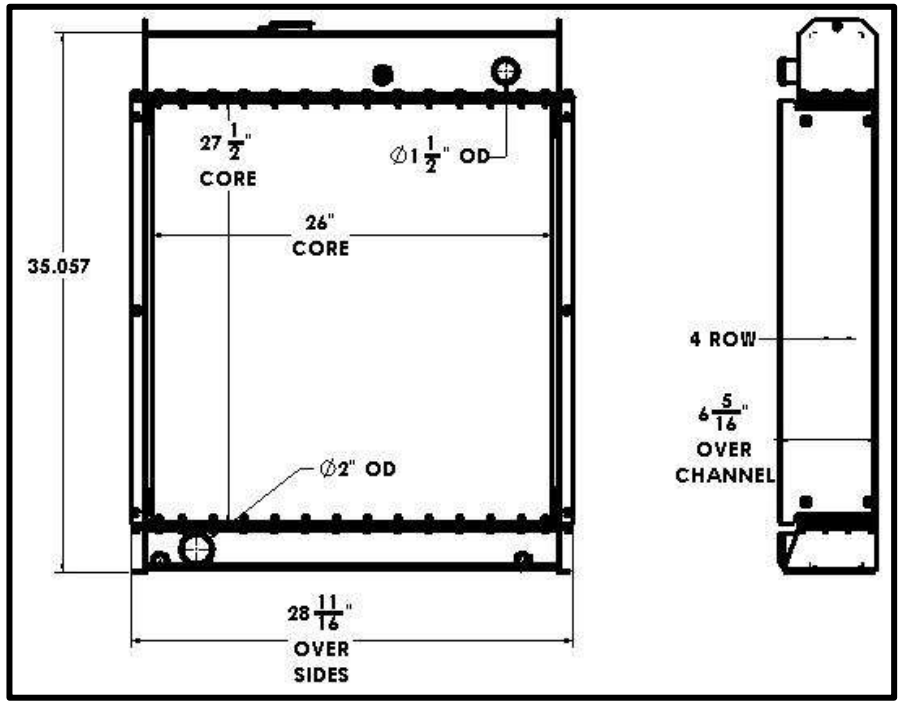

Overall Dimensions: 35-1/16” X 28-11/16” X 6-5/16”
Core: 27-1/2” X 26” X 4 Row
Inlet: 1-1/2” OD,
Outlet: 2” OD

Tel 1.800.774.2168
www.bgrradiator.com

BGR Part Number: BT-0058-8M
M-40-EF, 1A11194

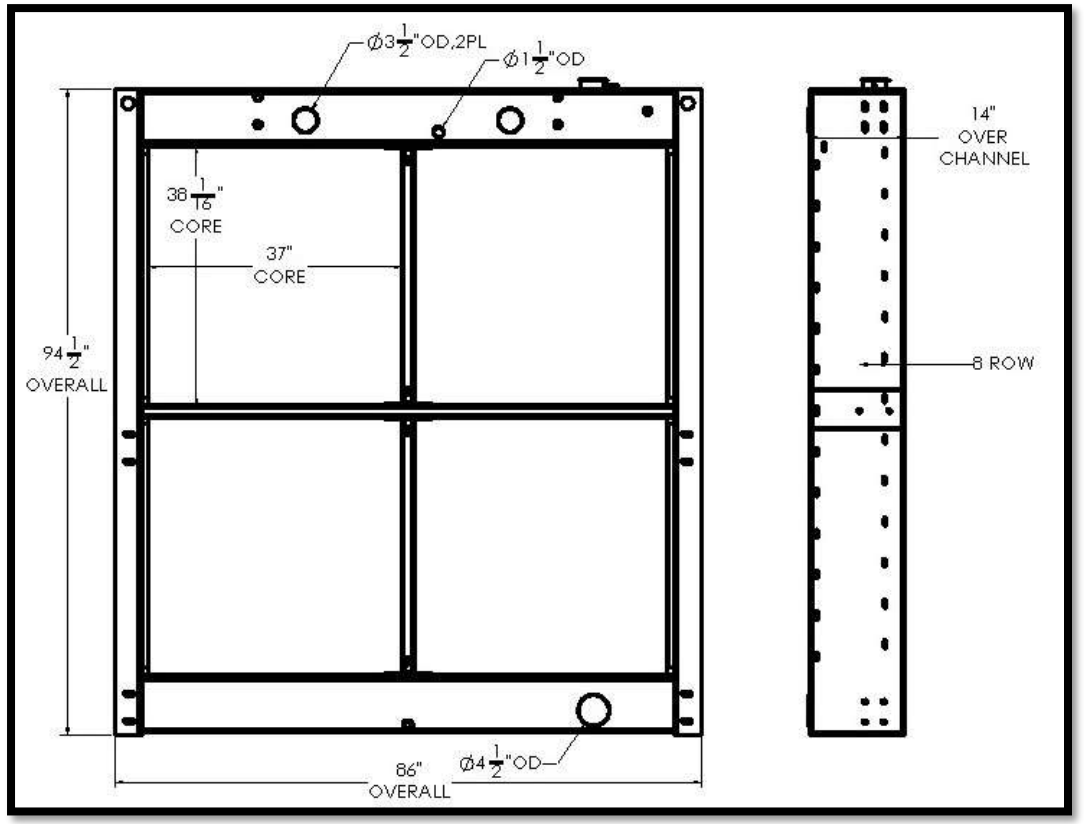

Overall Dimensions: 94-1/2” X 86” X 14”
Core: 38-1/16” X 37” X 8 Row
Inlet: 3-1/2”OD, 1-1/2”OD
Outlet: 4-1/2”OD

Listed dimensions may vary slightly from OE

BGR Part Number: BT-0059-6R
CUMMINS 3396076

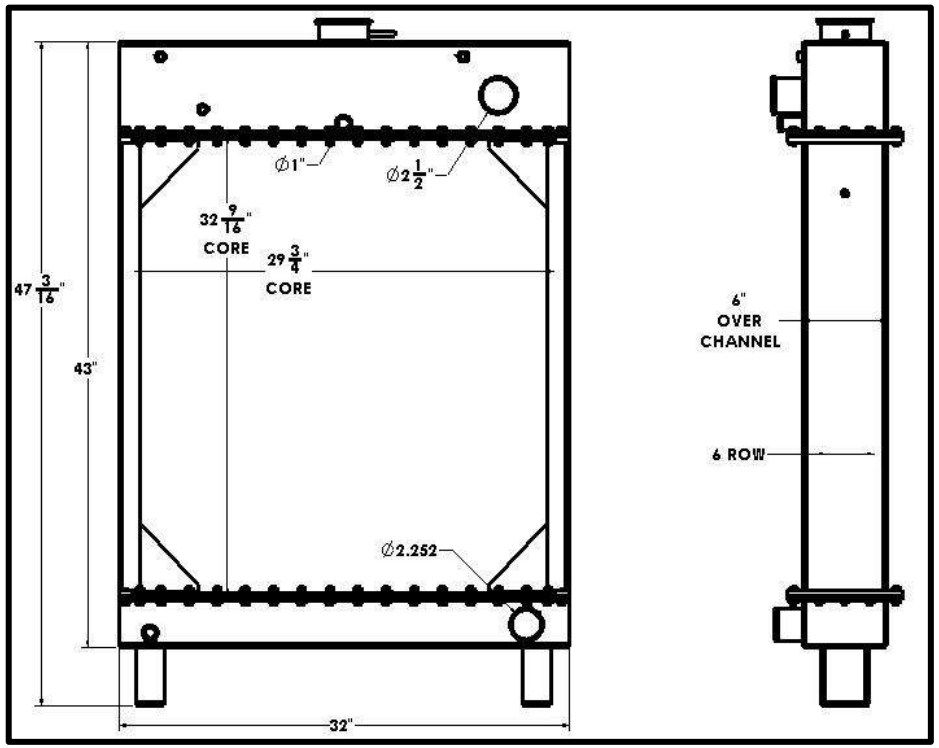

Overall Dimensions: 47-3/16” X 32” X 6”
Core: 32-9/16” X 29-3/4” X 6 Row
Inlet: 2-1/2” OD,
Outlet: 2-1/4” OD

Tel 1.800.774.2168
www.bgrradiator.com

BGR Part Number: BT-0060-4I
BEARWARD 5610100001

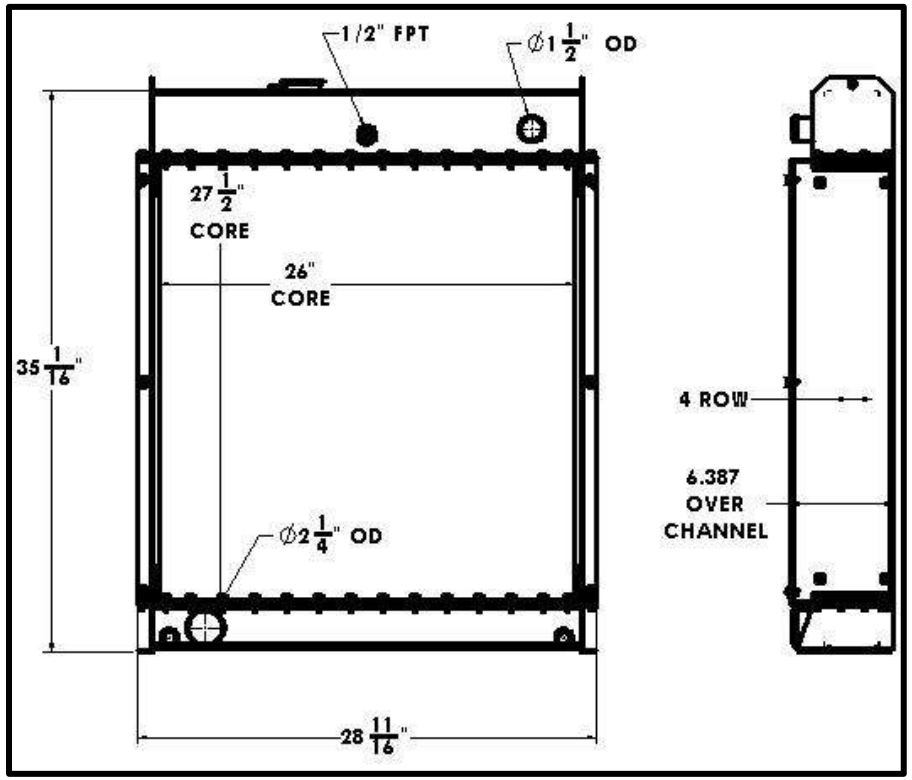

Overall Dimensions: 35-1/16” X 28-11/16” X 6-3/8”
Core: 27-1/2” X 26” X 4 Row
Inlet: 1-1/2” OD
Outlet: 2-1/4” OD

Listed dimensions may vary slightly from OE

BGR Part Number: BT-0061-6Z
MODINE M25-FB

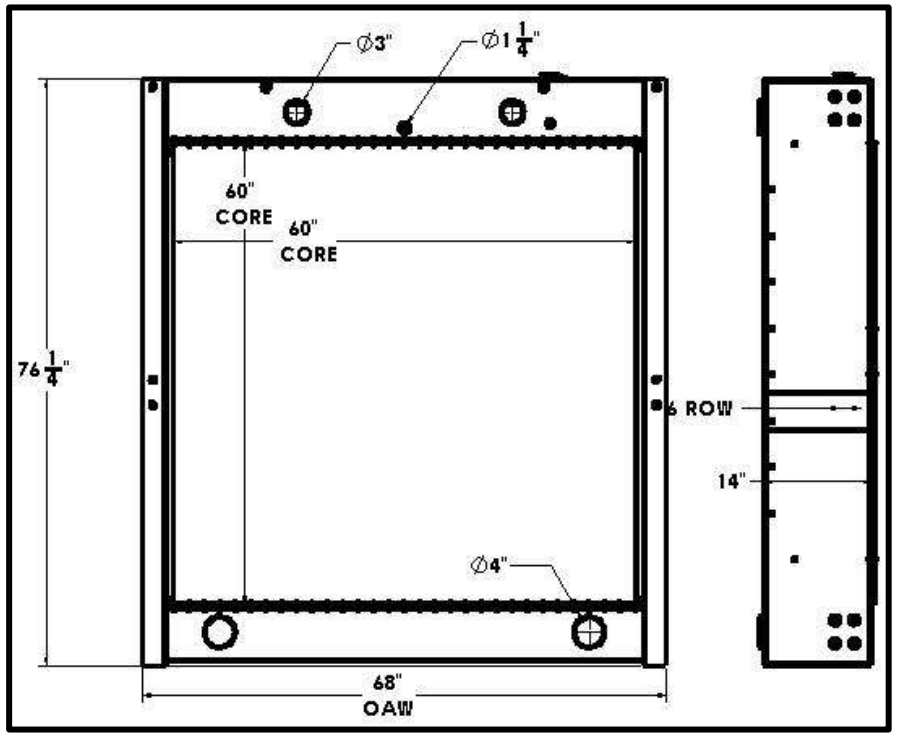

Overall Dimensions: 76-1/4” X 68” X 14”
Core: 60” X 60” X 6 Row
Inlet: 3” OD, 2PL
Outlet: 4” OD, 2PLF

Tel 1.800.774.2168
www.bgrradiator.com

BGR Part Number: BT-0062-6Z
Modine A-279649, 1A16314

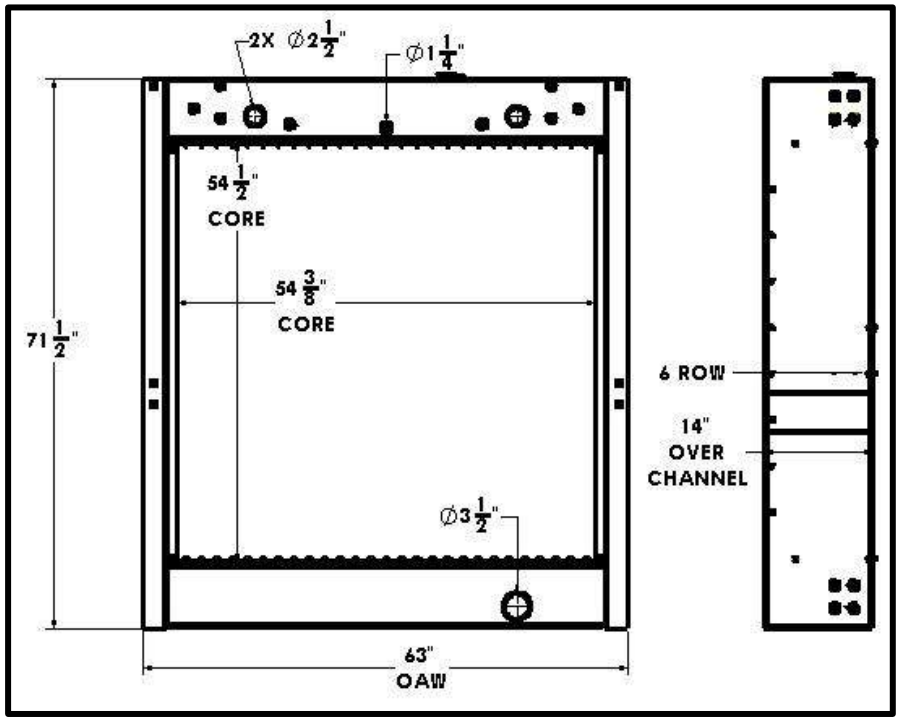

Overall Dimensions: 71-1/2” X 63” X 14”
Core: 54-1/2” X 54-3/8” X 6 Row
Inlet: 2-1/2” OD
Outlet: 3-1/2” OD

Listed dimensions may vary slightly from OE

BGR Part Number: BT-0063-4R
A-328687

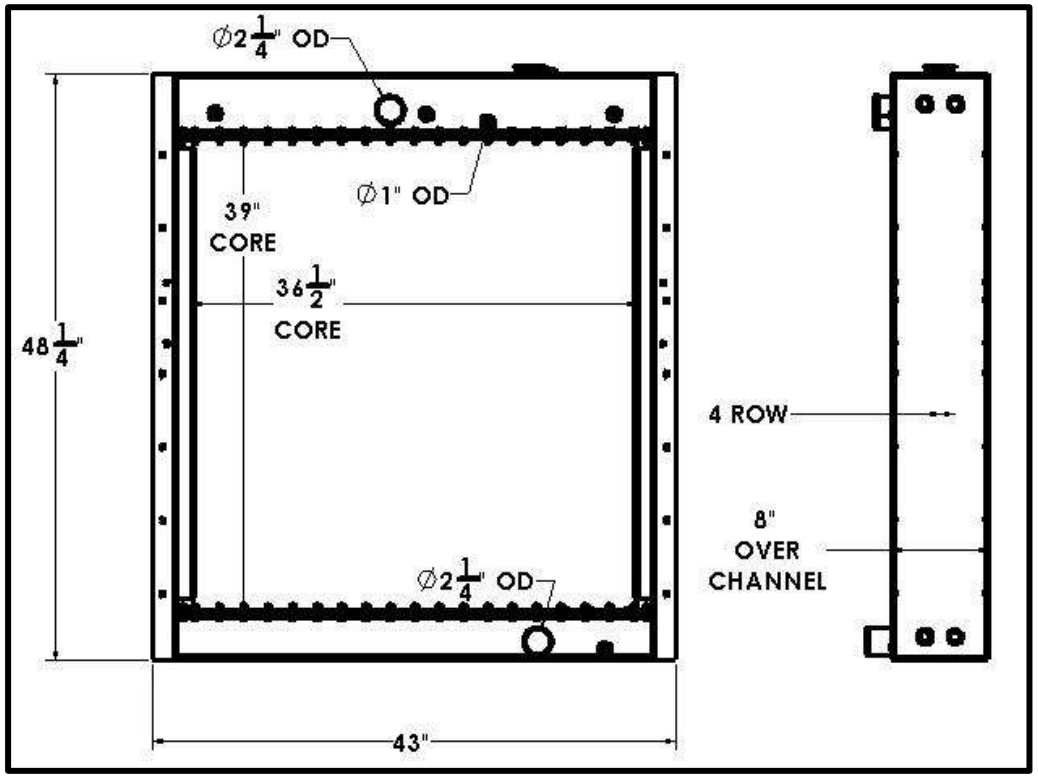

Overall Dimensions: 48-1/4” X 43” X 8”
Core: 39” X 36-1/2” X 4 Row
Inlet: 2-1/4” OD
Outlet: 2-1/4” OD

Tel 1.800.774.2168
www.bgrradiator.com

BGR Part Number: BT-0064-5Z
MODINE 1A11220D, M12 EF

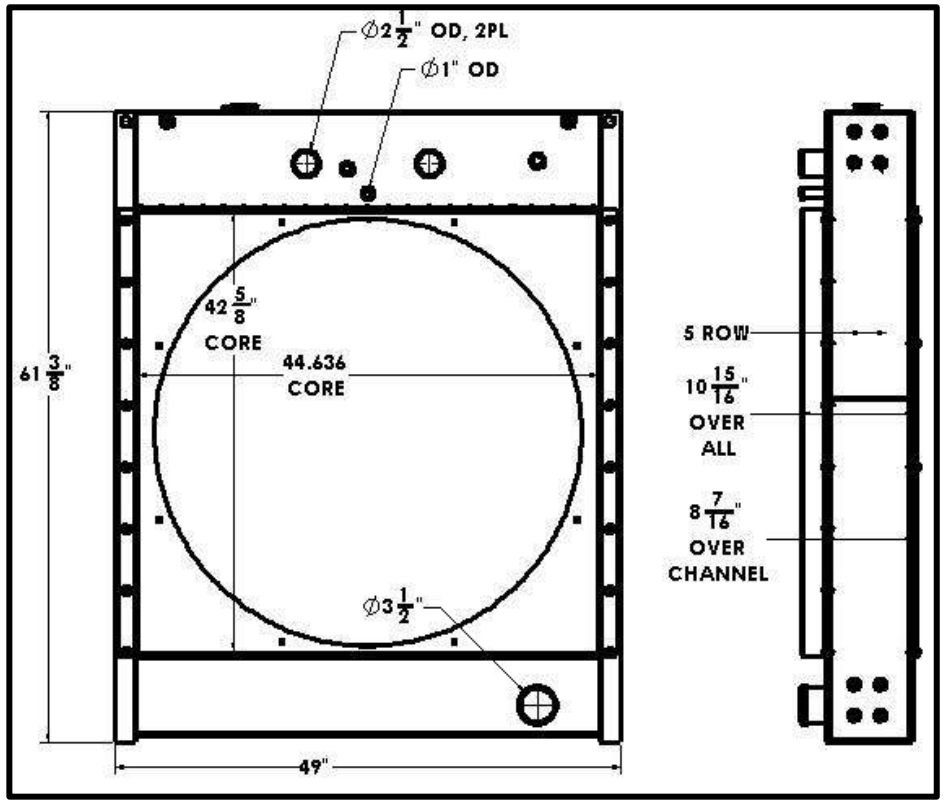

Overall Dimensions: 61-3/8” X 49” X 8-7/16”
Core: 42-5/8” X 44-1/2” X 5 Row
Inlet: 2-1/2” OD
Outlet: 3-1/2” OD

Listed dimensions may vary slightly from OE

BGR Part Number: BT-0065-5I
SULLAIR S1817, IHT 12881P

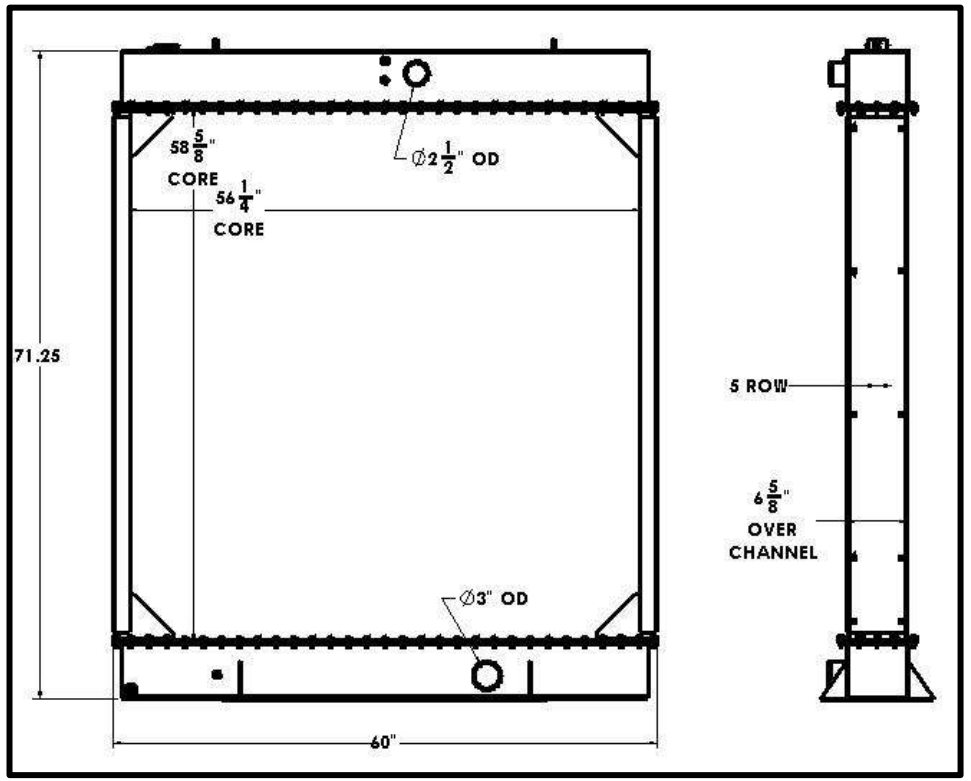

Overall Dimensions: 71-1/4” X 60” X 6-5/ 8”
Core: 58-5/8” X 56-1/4” X 5 Row
Inlet: 2-1/2” OD
Outlet: 3” OD

Tel 1.800.774.2168
www.bgrradiator.com

BGR Part Number: BT-0066-8M
ONAN 130-0837, YOUNG D251018, PERF R8798A

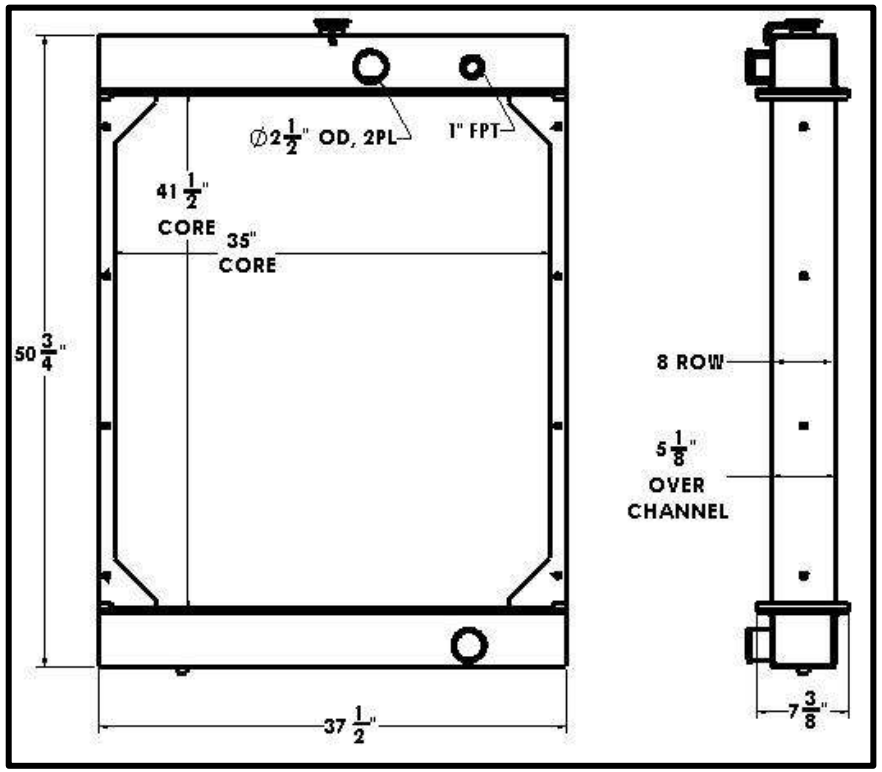

Overall Dimensions: 50-3/4” X 37-1/2” X 5-1/8”
Core: 41-1/2” X 35” X 8 Row
Inlet: 2-1/2” OD
Outlet: 2-1/2” OD

Listed dimensions may vary slightly from OE

BGR Part Number: BT-0067-6Z
MODINE M-16-EF, SP03708

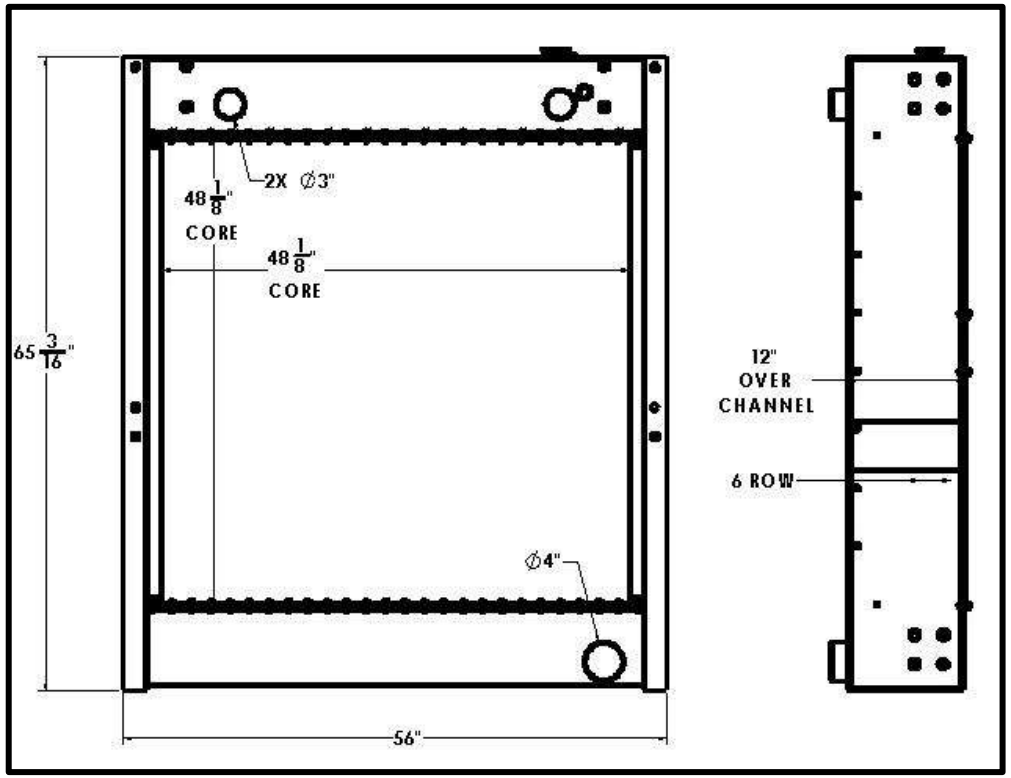

Overall Dimensions: 65-3/16” X 56” X 12”
Core: 48-1/8” X 48-1/8” X 6 Row
Inlet: 3” OD, 2PL
Outlet: 4” OD

Tel 1.800.774.2168
www.bgrradiator.com

BGR Part Number: BT-0068-6T
IEA ECO15S2L

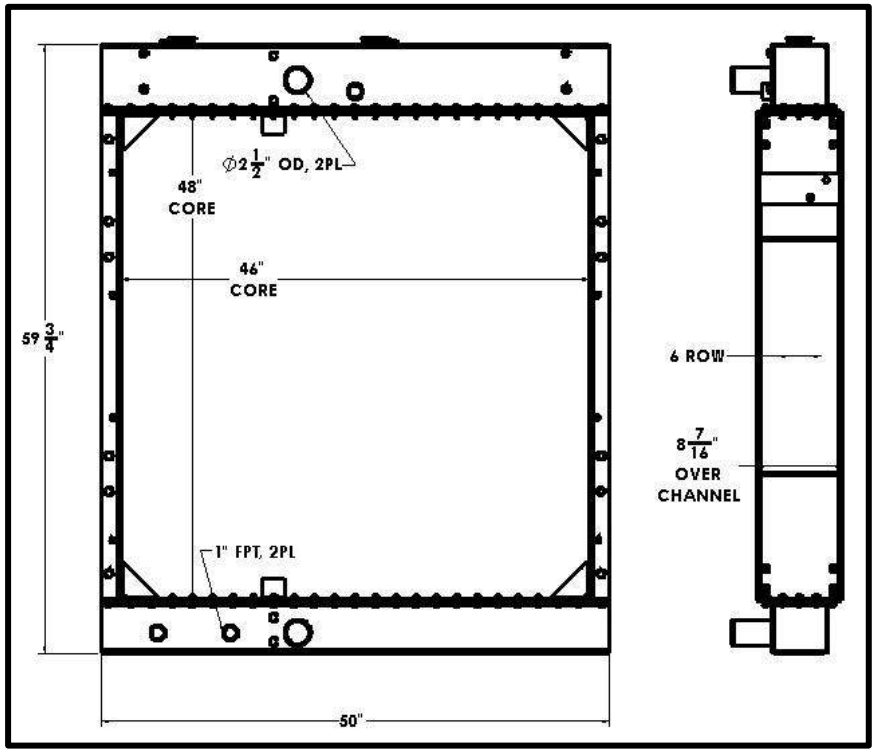

Overall Dimensions: 59-3/4” X 50” X 8-7/16”
Core: 48” X 46” X 6 Row
Inlet: 2-1/2” OD JW, 1” FPT AC
Outlet: 2-1/2” OD JW, 1” FPT AC

Listed dimensions may vary slightly from OE

BGR Part Number: BT-0069-3I
120-029, 5529600001

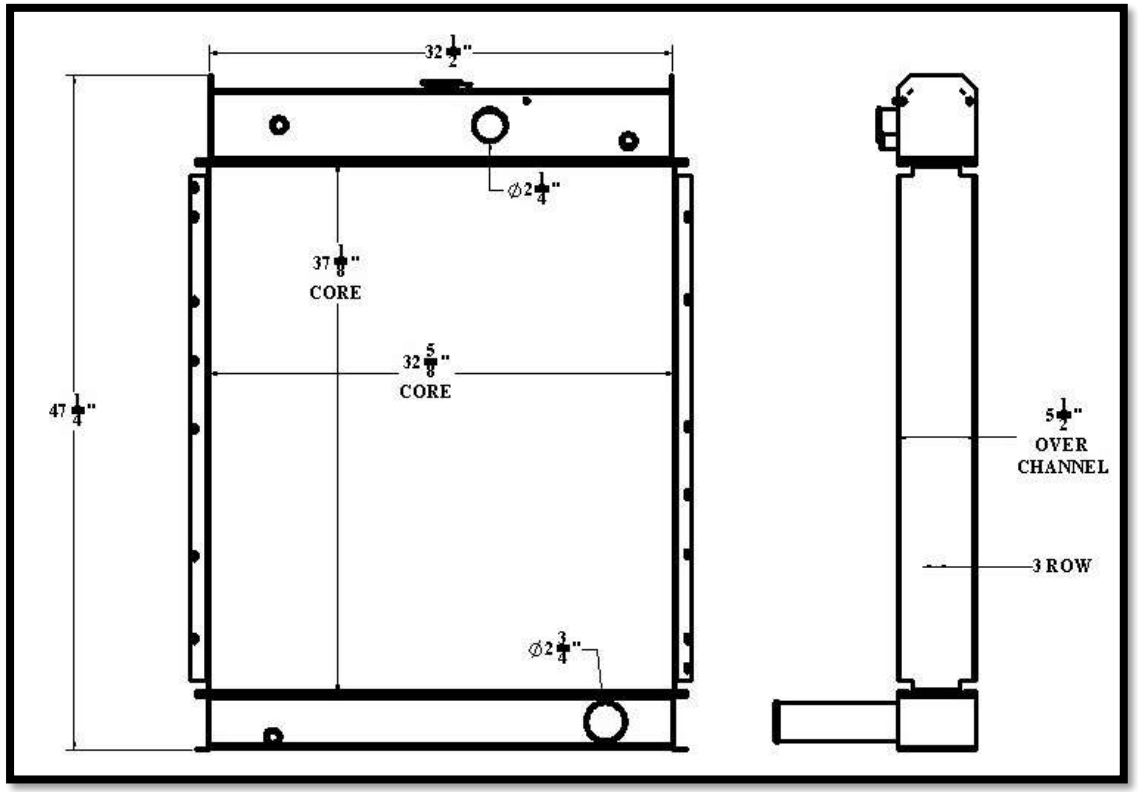

Overall Dimensions: 47 1/4” X 35 1/2” X 5-1/2”
Core: 37-1/8” X 32-5/8” X 3 ROW”
Inlet: 2-1/4” OD
Outlet: 2-3/4” OD

Tel 1.800.774.2168
www.bgrradiator.com

BGR Part Number: BT-0070-5M
ONAN PART NUMBER 130-4356, 130-4355-01

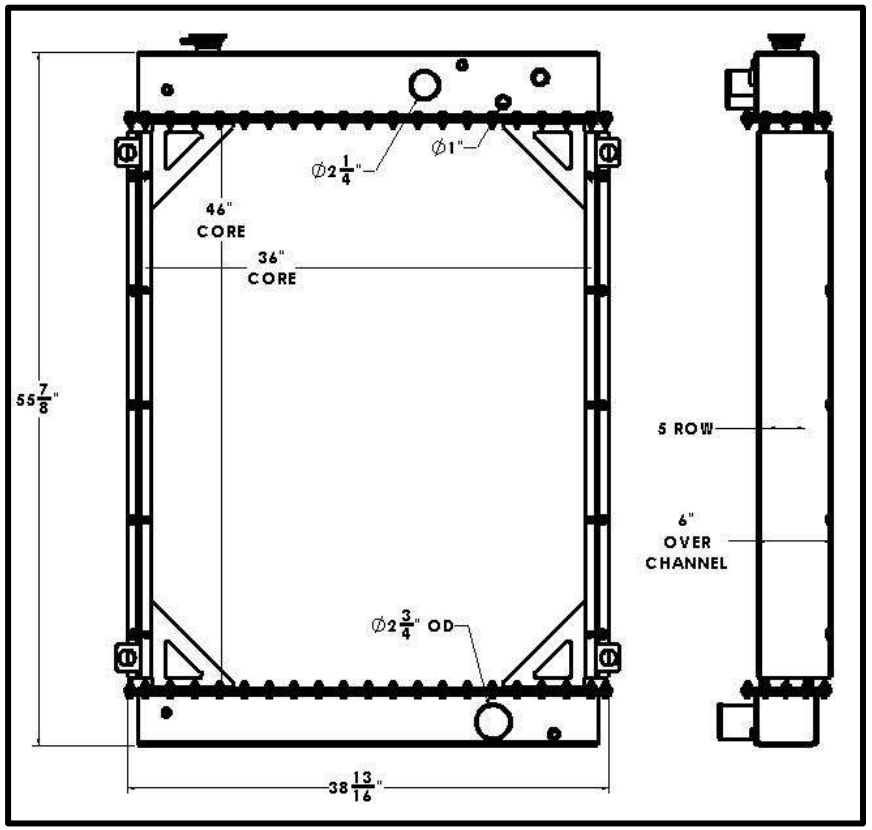

Overall Dimensions: 55-7/8” X 38-13/16” X 6”
Core: 46” X 36” X 5 Row
Inlet: 2-1/4” OD
Outlet: 2-3/4” OD

Listed dimensions may vary slightly from OE

BGR Part Number: BT-0071-6M
CUMMINS 3394637-RAD, GTI 1548HH

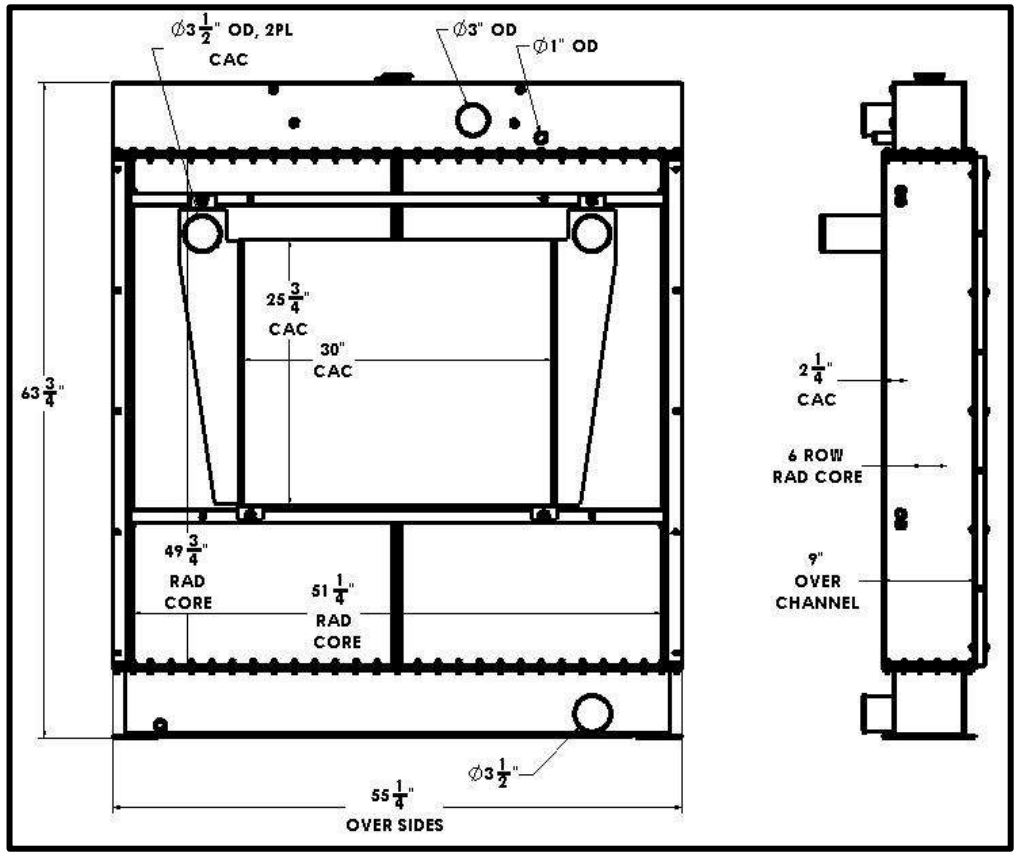

Overall Dimensions:63-3/4” X 55-1/4” X 9”
Core: 49-3/4” X 51-1/4” X 6 ROW
Inlet: 3” OD
Outlet: 3-1/2” OD

Tel 1.800.774.2168
www.bgrradiator.com

BGR Part Number: BT-0072-5M
ONAN PART NUMBER 130-4369

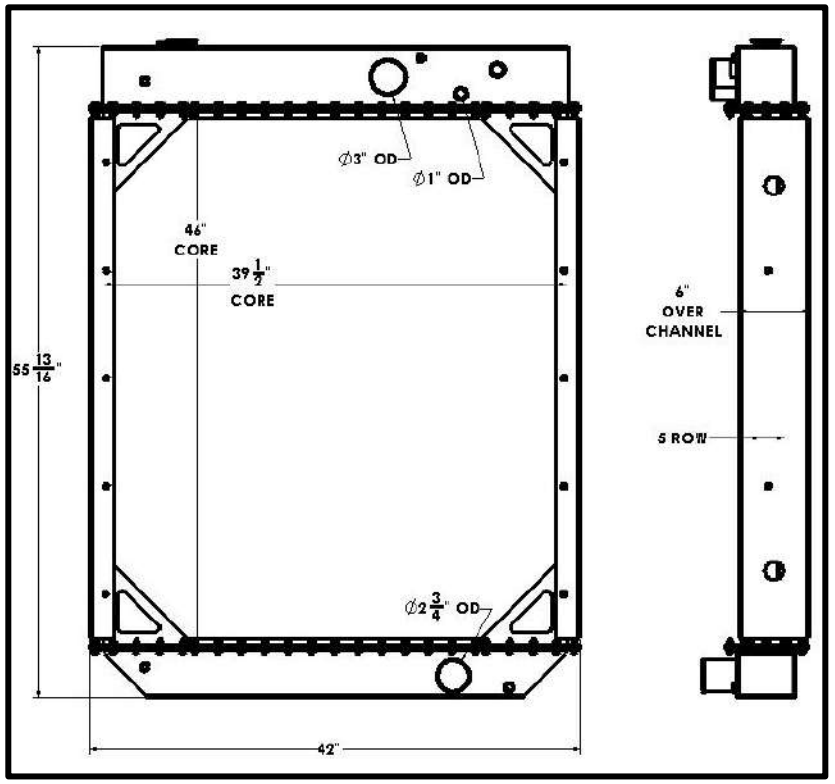

Overall Dimensions: 55-13/16” X 42” X 6”
Core: 46” X 39-1/2” X 5 Row
Inlet: 3” OD
Outlet: 2-3/4” OD

Listed dimensions may vary slightly from OE

BGR Part Number: BT-0073-6Z
ELGIN STREET SWEEPER

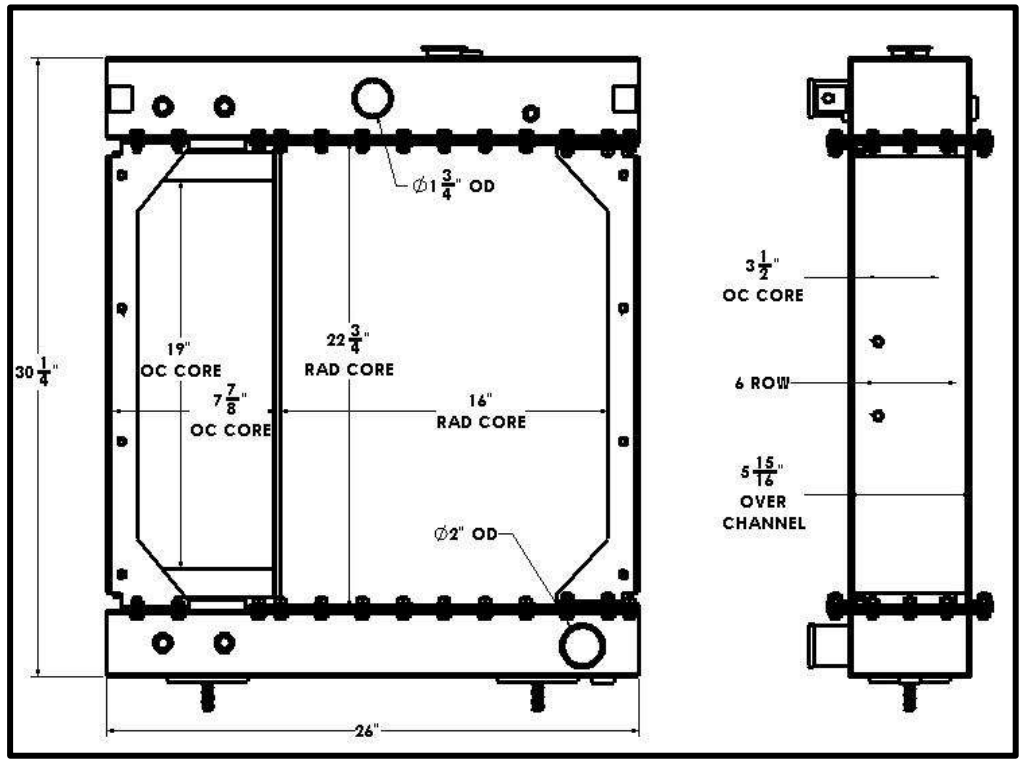

Overall Dimensions:63-3/4” X 55-1/4” X 9”
Core: 49-3/4” X 51-1/4” X 6 ROW
Inlet: 3” OD
Outlet: 3-1/2” OD

Tel 1.800.774.2168
www.bgrradiator.com

BGR Part Number: BT-0074-7M
CUMMINS 4063046

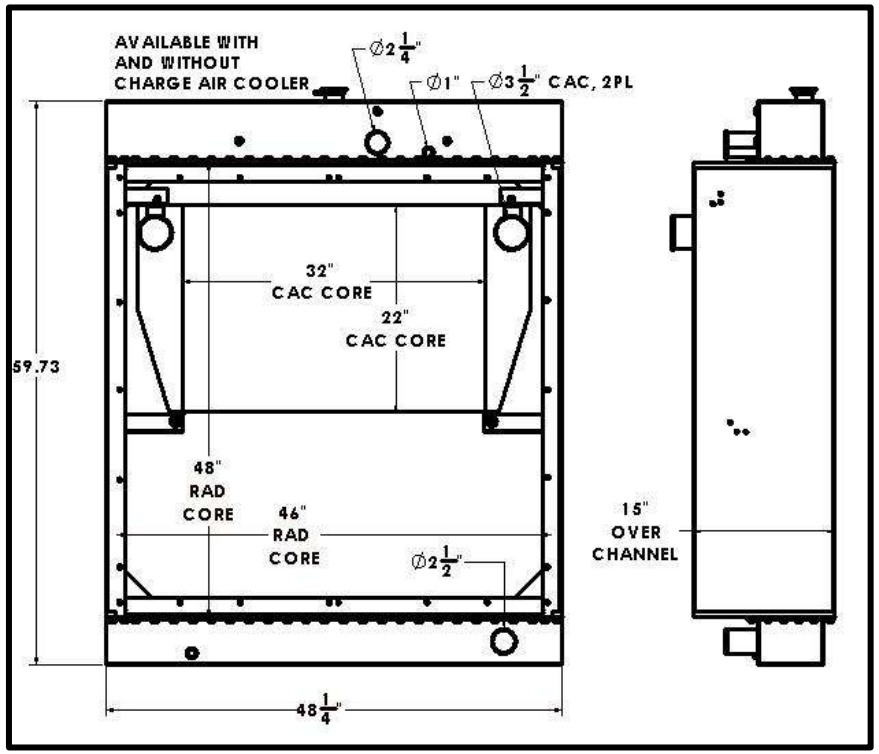

Overall Dimensions: 59-3/4” X 48-1/4” X 15”
Core: 48” X 46” X 7 Row
Inlet: 2-1/4” OD
Outlet: 2-1/2” OD

Listed dimensions may vary slightly from OE

BGR Part Number: BT-0075-8I
CUMMINS

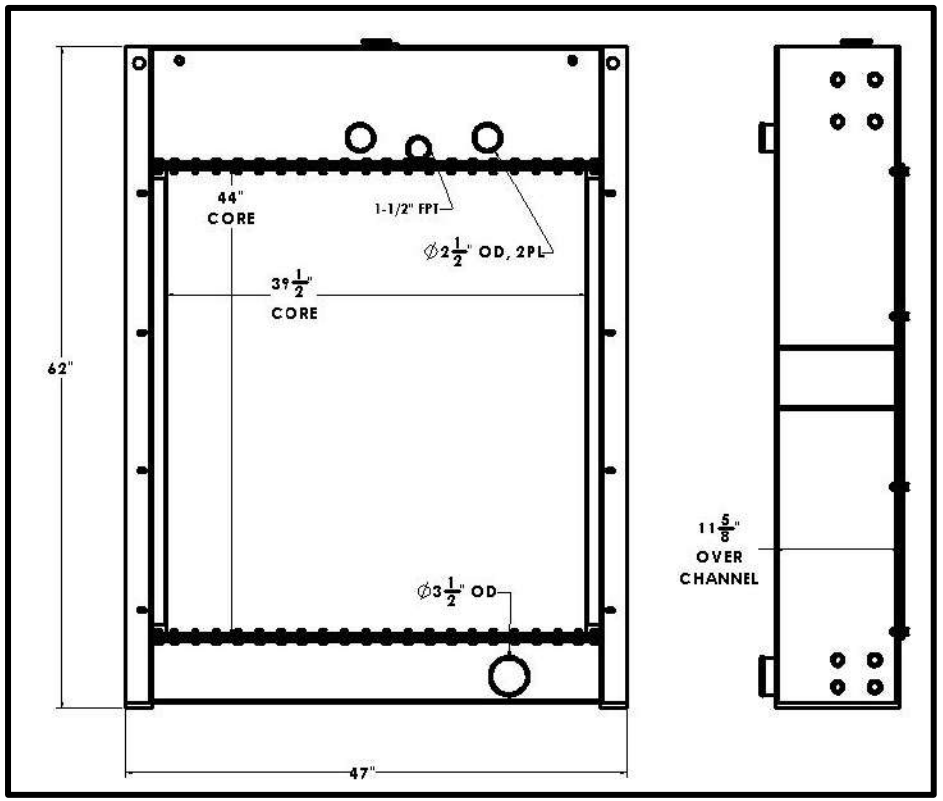

Overall Dimensions: 62” X 47” X 11-5/8”
Core: 44” X 39-1/2” X 8 ROW
Inlet: 2-1/2” OD (2PL)
Outlet: 3-1/2” OD

Tel 1.800.774.2168
www.bgrradiator.com

BGR Part Number: BT-0076-8I
MODINE M50-EF, 1A15545

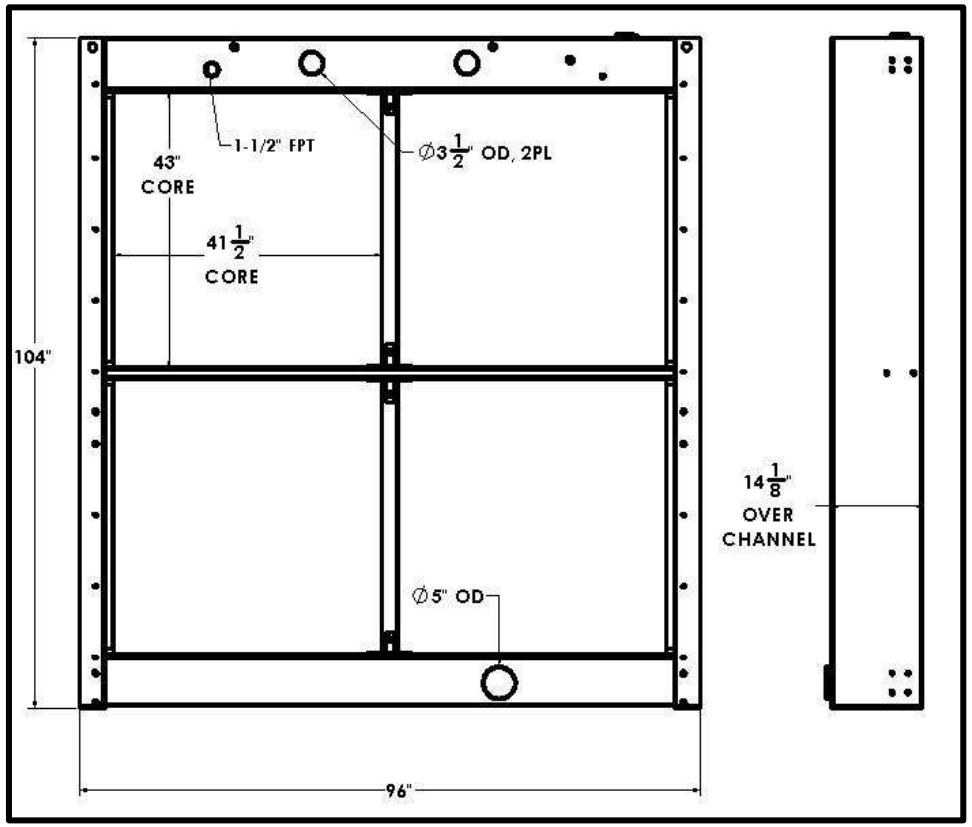

Overall Dimensions: 104” X 96” X 14-1/8”
Core: 43” X 41-1/2” X 8 Row (4 CORES)
Inlet: 3-1/2” OD (2PL)
Outlet: 5” OD

Listed dimensions may vary slightly from OE

BGR Part Number: BT-0077-7I
M-12-EF, 2A15780

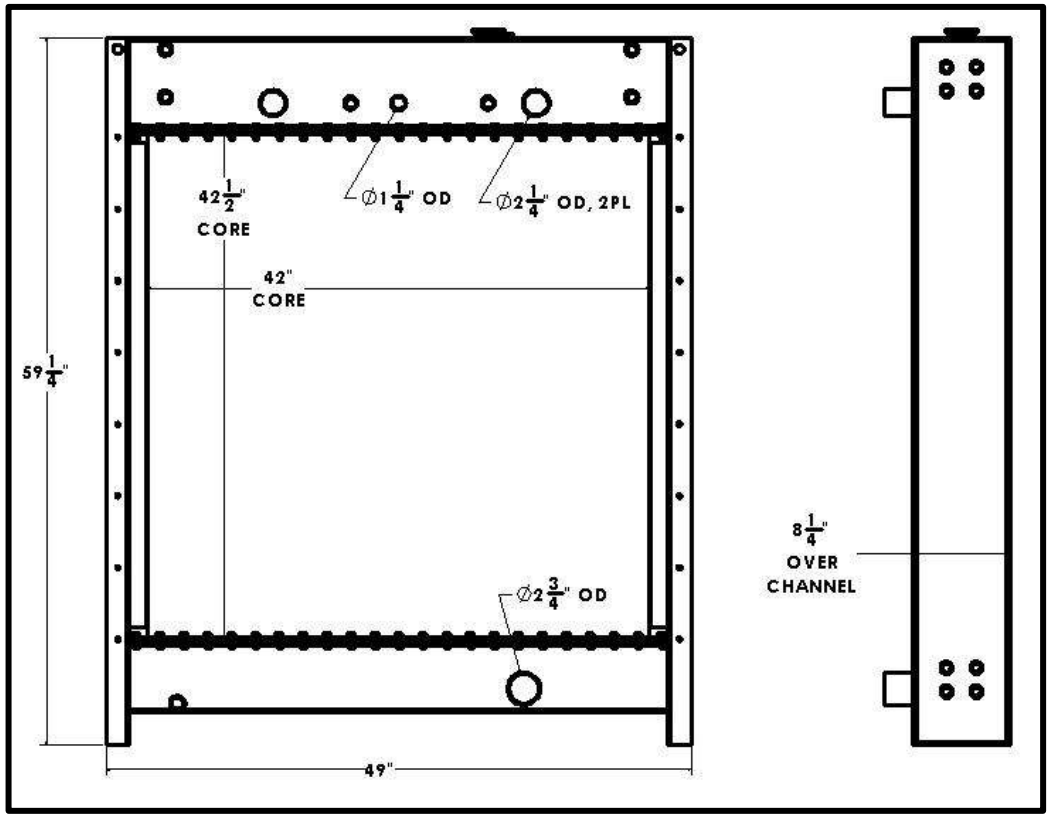

Overall Dimensions: 59-1/4” X 49” X 8-1/4”
Core: 42-1/2” X 42” X 7 ROW
Inlet: 2-1/4” OD (2PL)
Outlet: 2-3/4” OD

Tel 1.800.774.2168
www.bgrradiator.com

BGR Part Number: BT-0078-8I
CATERPILLAR

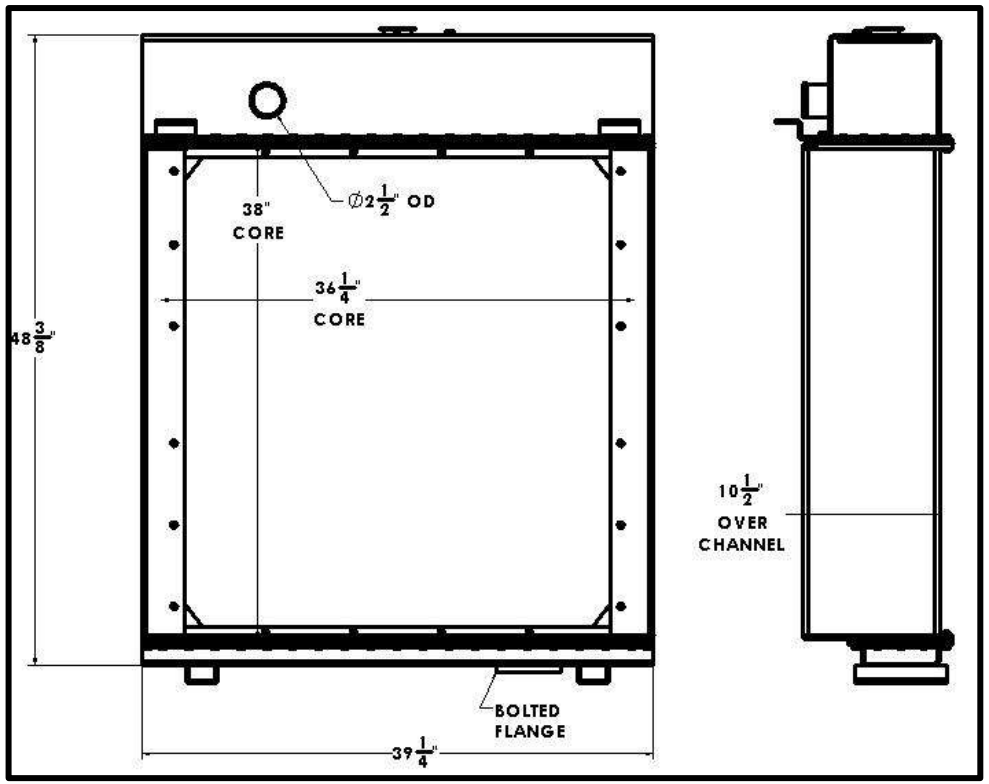

Overall Dimensions: 48-3/8” X 39-1/4” X 10-1/2”
Core: 38” X 36-1/4” X 8 Row
Inlet: 2-1/2” OD (2PL)
Outlet: BOLTED FLANGE

Listed dimensions may vary slightly from OE

BGR Part Number: BT-0079-8M
MODINE M-25-EF, 1A11189

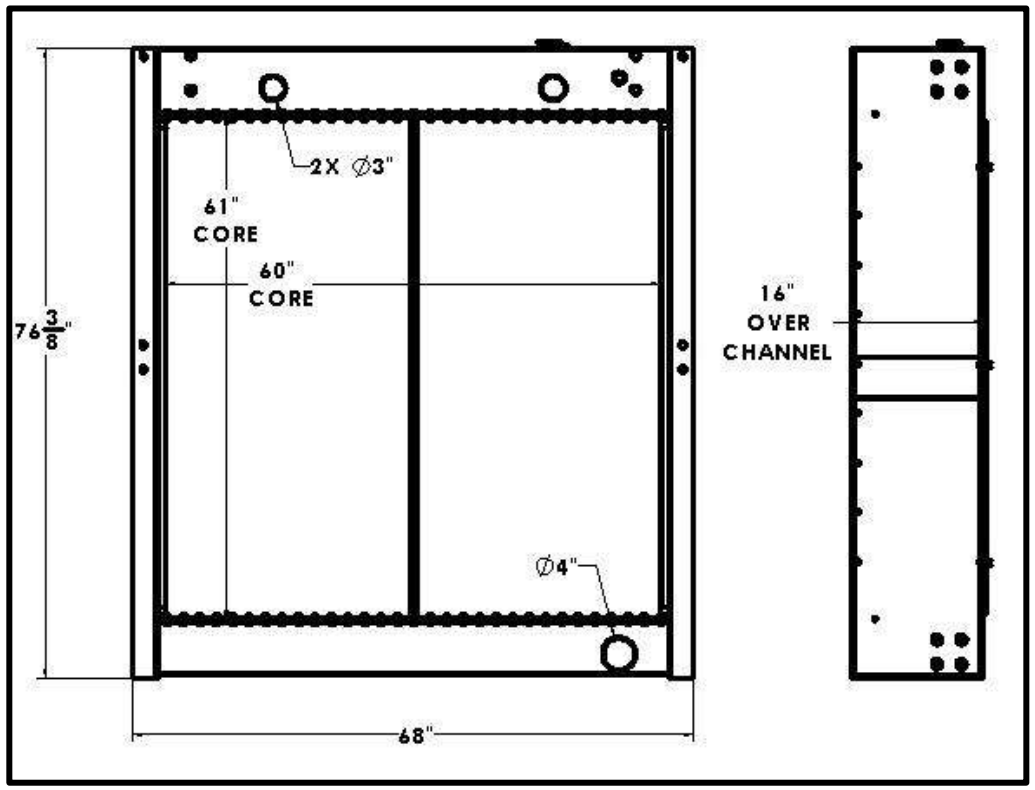

Overall Dimensions: 76-3/8” X 68” X 16”
Core: 61” X 60” X 8 ROW
Inlet: 3” OD (2PL)
Outlet: 4” OD

Tel 1.800.774.2168
www.bgrradiator.com

BGR Part Number: BT-0080-8Z
01025-0623 TUB GRINDER CAT 3412

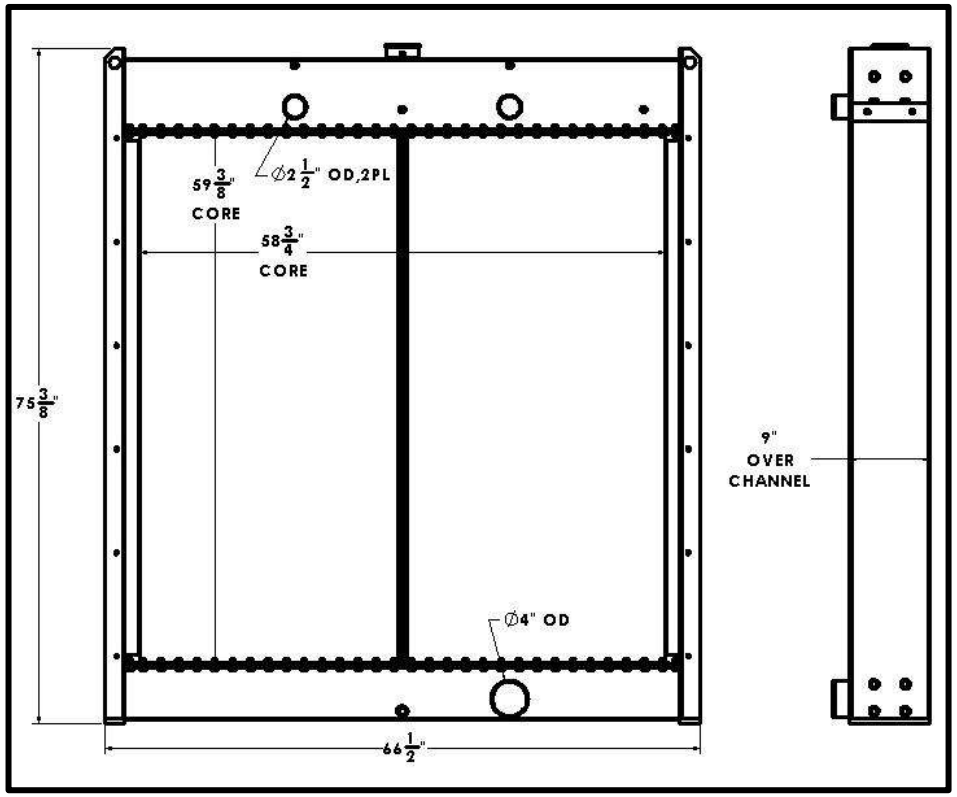

Overall Dimensions: 75-3/8” X 66-1/2” X 9”
Core: 59-3/8” X 58-3/4” X 8 Row
Inlet: 2-1/2” OD (2PL)
Outlet: 4” OD

Listed dimensions may vary slightly from OE

BGR Part Number: BT-0081-6Y
CATERPILLAR 205-6557

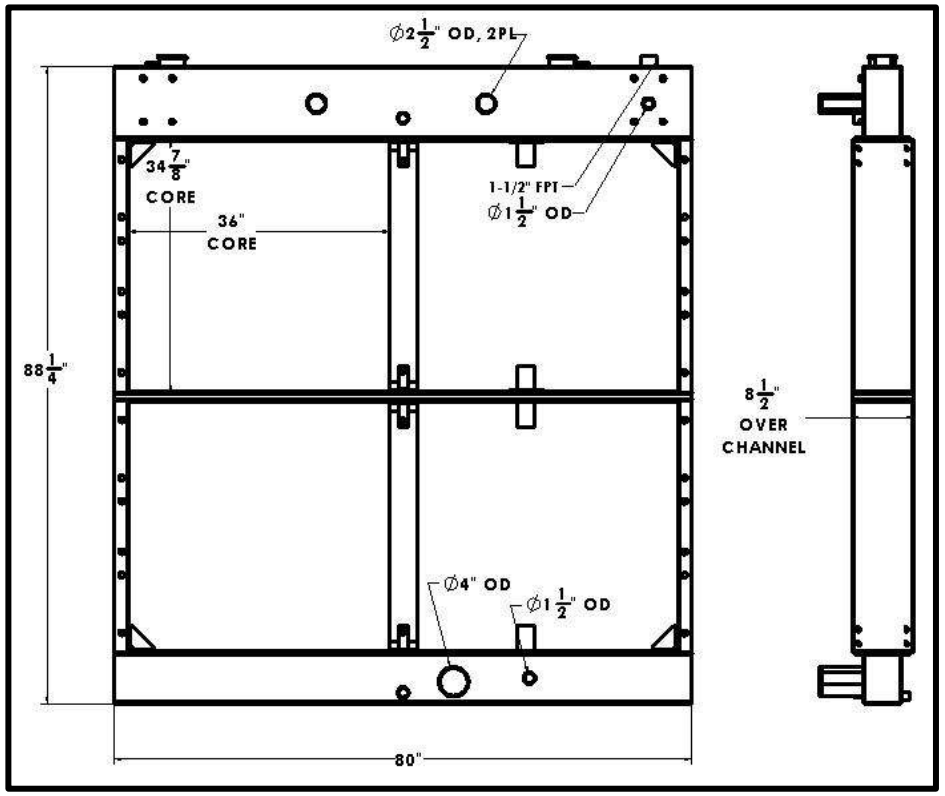

Overall Dimensions: 88-1/4” X 80” X 8-1/2”
Core: 34-7/8” X 36” X 6 ROW
Inlet: 2-1/2” OD (2PL), 1-1/2” OD
Outlet: 4” OD, 1-1/2” OD

Tel 1.800.774.2168
www.bgrradiator.com

BGR Part Number: BT-0082-6I
MODINE M16-HR-10

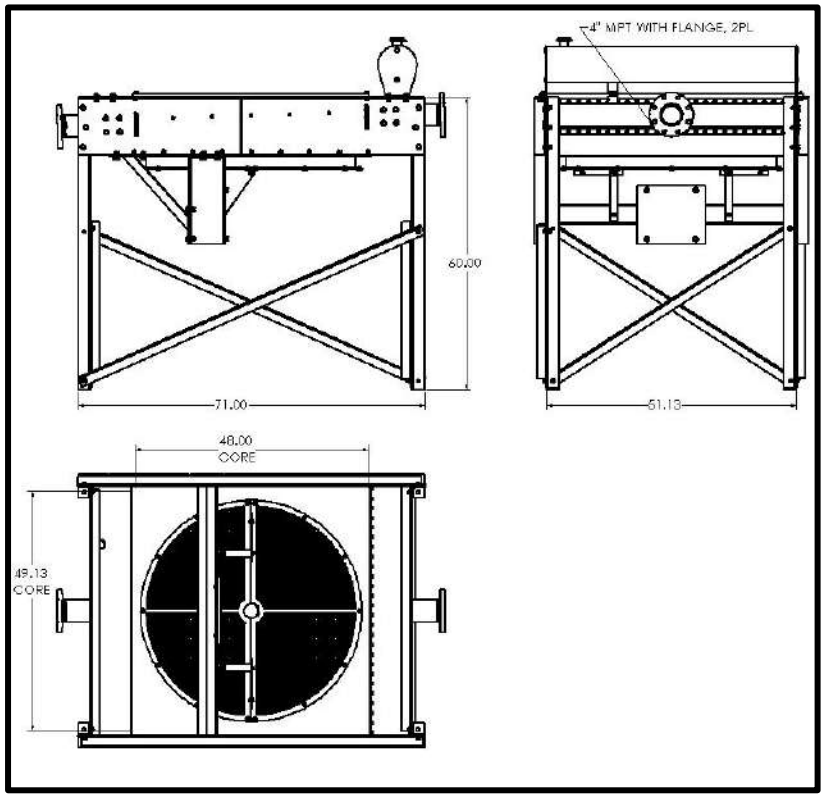

Overall Dimensions: 71” X 51-1/8” X 60”
Core: 48” X 49-1/8” X 6 Row
Inlet: 4” MPT
Outlet: 4” MPT

Listed dimensions may vary slightly from OE

BGR Part Number: BT-0083-6Z
MODINE M20-EF-ST, SP7188

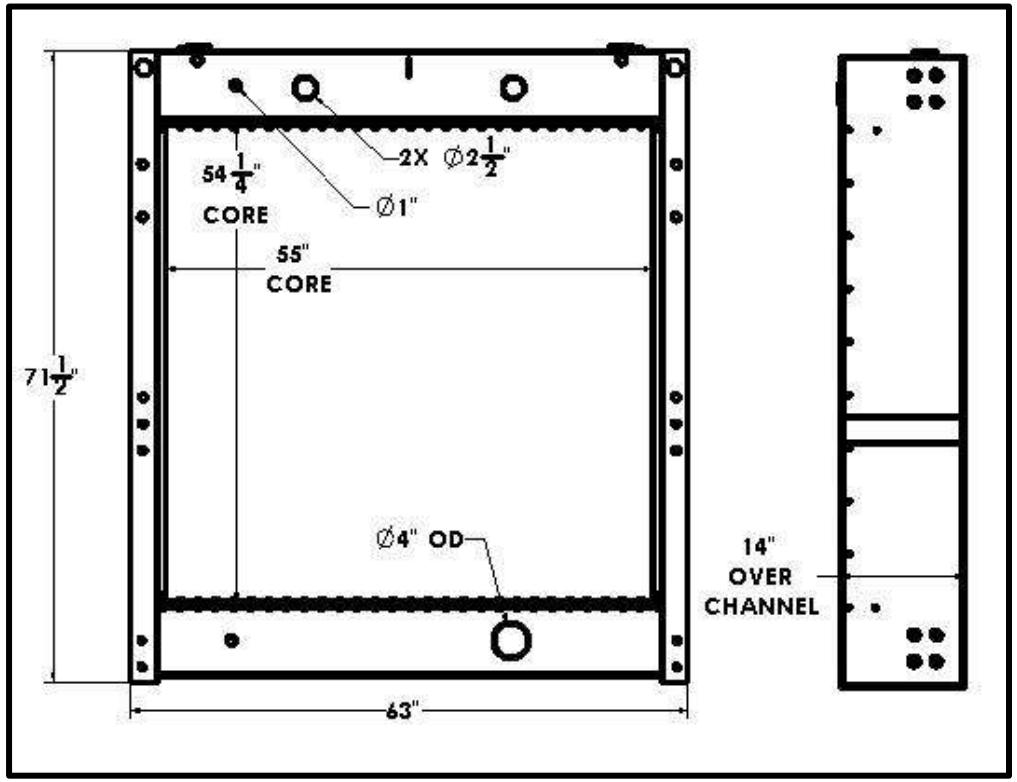

Overall Dimensions: 71-1/2” X 63” X 14”
Core: 54-1/4” X 55” X 6 ROW
Inlet: 2-1/2” OD (2PL)
Outlet: 4” OD

Tel 1.800.774.2168
www.bgrradiator.com

BGR Part Number: BT-0084-5I

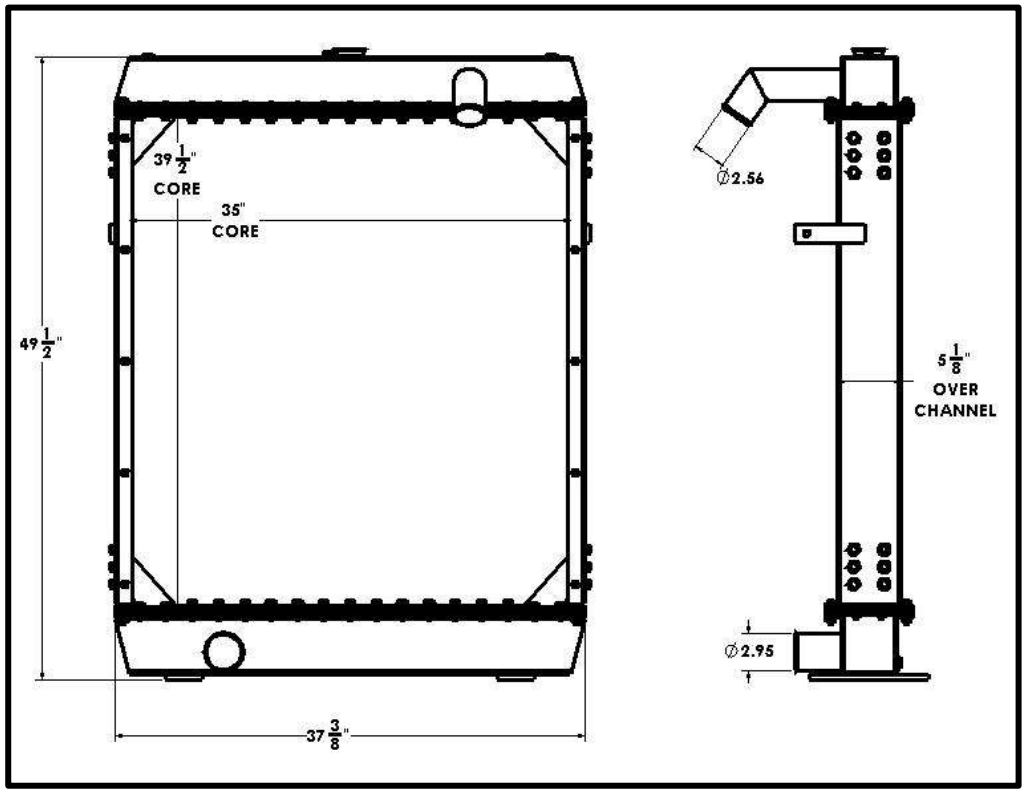

Overall Dimensions: 49-1/2” X 37-3/8” X 5-1/8”
Core: 39-1/2” X 35” X 5 Row
Inlet: 2-9/16” OD
Outlet: 3” OD

Listed dimensions may vary slightly from OE

BGR Part Number: BT-0085-8X
ROCORE R27472

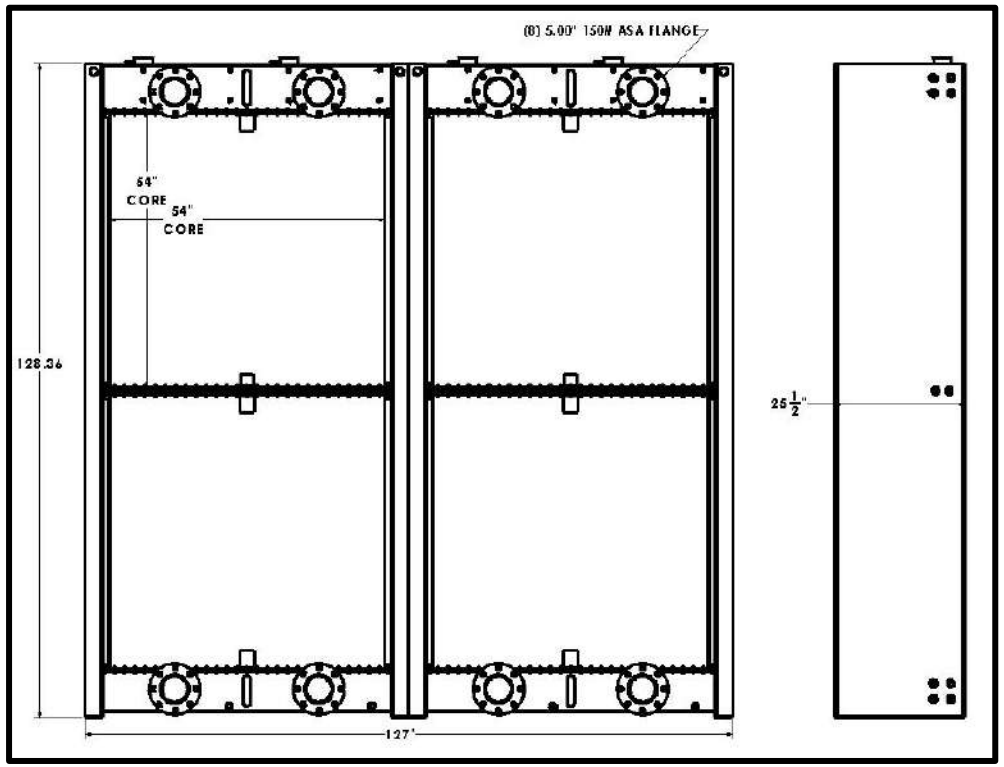

Overall Dimensions: 128-3/8” X 127” X 25-1/2”
Core: 54” X 54” X 8 ROW
Inlet: 5” MPT” (4PL)
Outlet: 5” MPT” (4PL)

Tel 1.800.774.2168
www.bgrradiator.com

BGR Part Number: BT-0086-5I
KOHLER GM52736-REV C

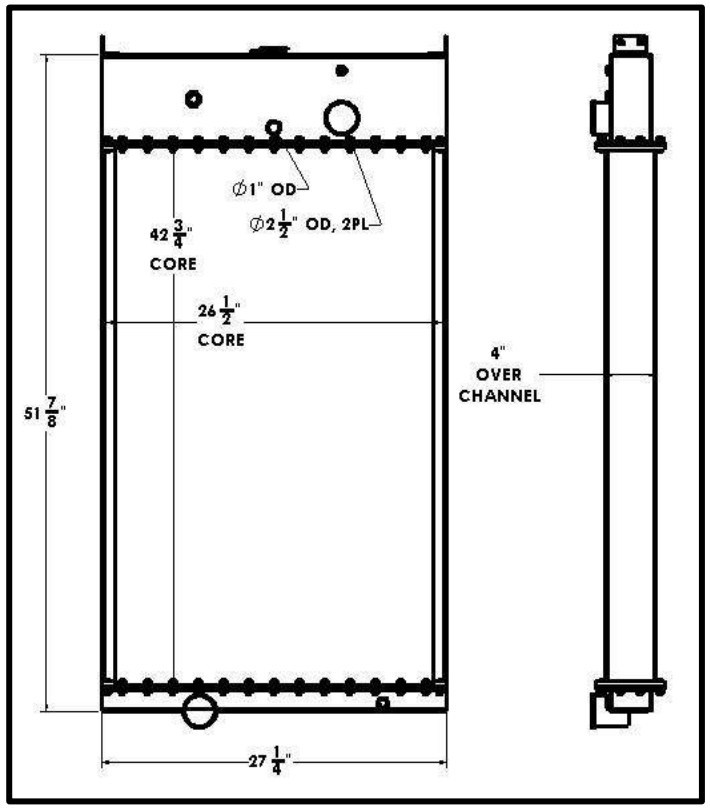

Overall Dimensions: 51-7/8” X 27-1/4” X 4”
Core: 42-3/4” X 26-1/2” X 5 Row
Inlet: 2-1/2” OD
Outlet: 2-1/2” OD

Listed dimensions may vary slightly from OE

BGR Part Number: BT-0087-6Y
IEA EC015S17, SN 4642

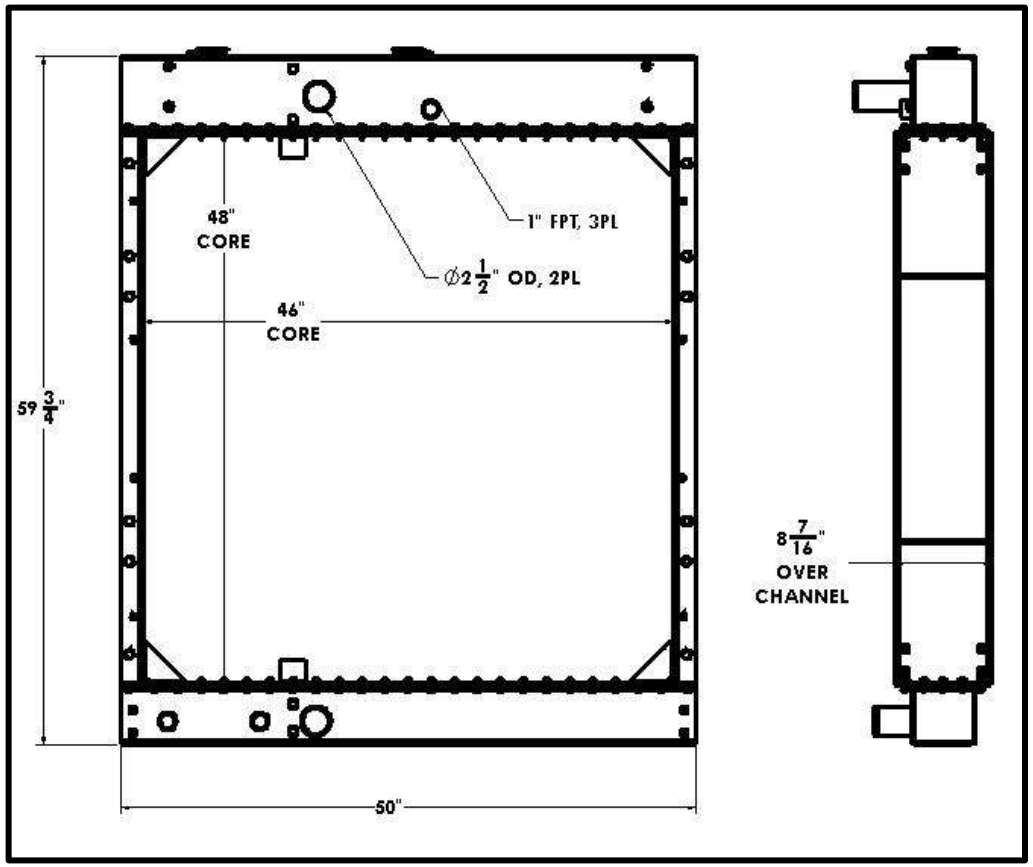

Overall Dimensions: 59-3/4” X 50” X 8-7/16”
Core: 48” X 46” X 6 ROW
Inlet: 2-1/2” OD/1” FPT
Outlet: 2-1/2” OD/ 1” FPT

Tel 1.800.774.2168
www.bgrradiator.com

BGR Part Number: BT-0088-7Y
STUART RADIATOR 9134300, 80086, SN 5349

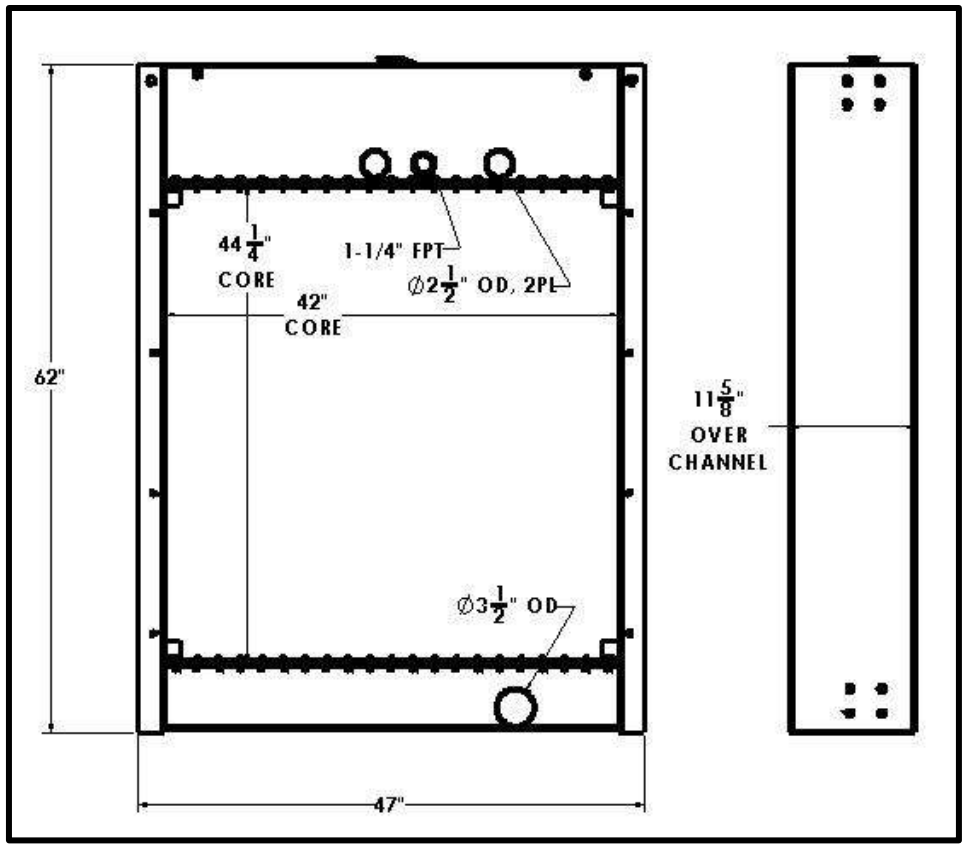

Overall Dimensions: 62” X 47” X 11-5/8”
Core: 44-1/4” X 42” X 7 Row
Inlet: 2-1/2” OD (2PL)
Outlet: 3-1/2” OD

Listed dimensions may vary slightly from OE

BGR Part Number: BT-0089-6Y
MODINE M-20-EF, SPO-1649

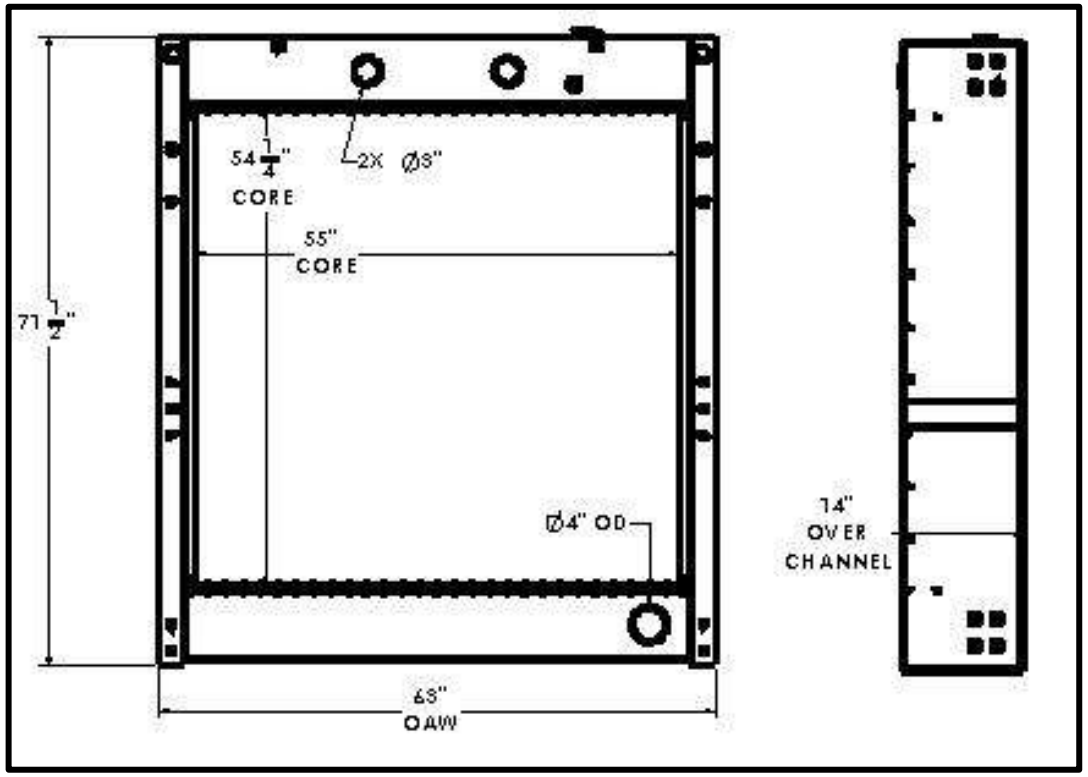

Overall Dimensions: 71-1/2” X 63” X 14”
Core: 54-1/4” X 55” X 6 ROW
Inlet: 3” OD (2PL)
Outlet: 4” OD

Tel 1.800.774.2168
www.bgrradiator.com

BGR Part Number: BT-0090-8I
MODINE M-25-EF, SP2398

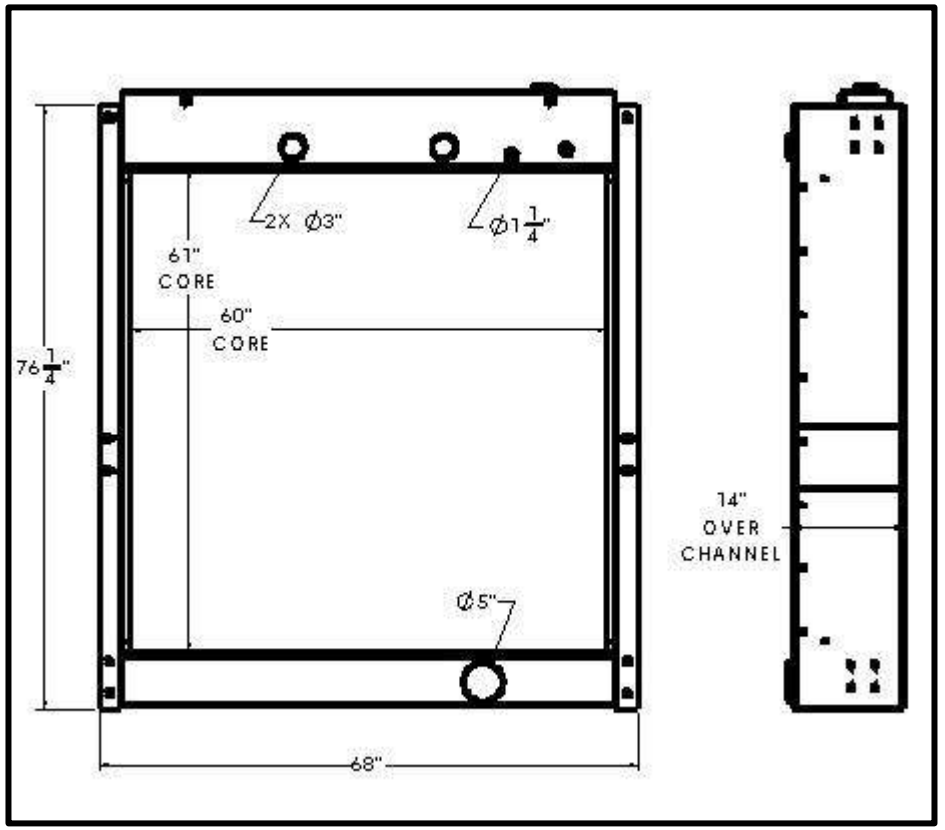

Overall Dimensions: 76-1/4” X 68” X 14”
Core: 61” X 60” X 8 Row
Inlet: 3” OD (2PL)
Outlet: 5” OD

Listed dimensions may vary slightly from OE

BGR Part Number: BT-0091-6Y
ELGIN

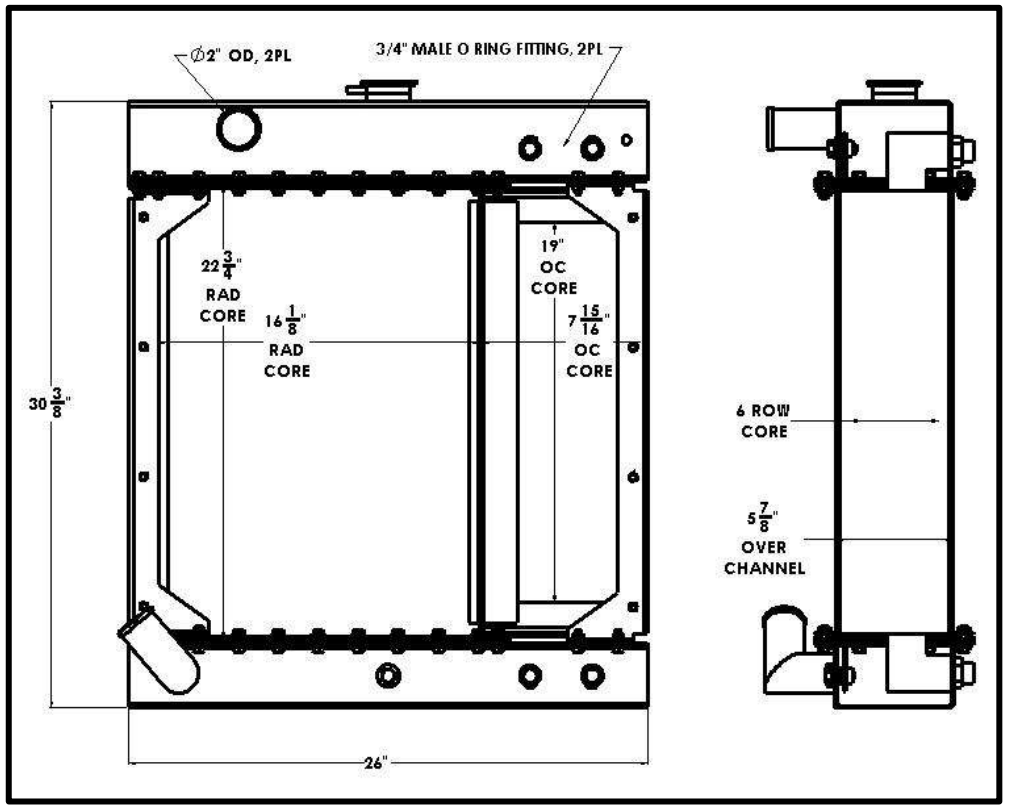

Overall Dimensions: 30-3/8” X 26” X 5-7/8”
Core: 22-3/4” X 16-1/8” X 6 ROW(RAD)
Inlet: 2” OD
Outlet: 2” OD

Tel 1.800.774.2168
www.bgrradiator.com

BGR Part Number: BT-0092-6I
MODINE M-25-EF, SP07109

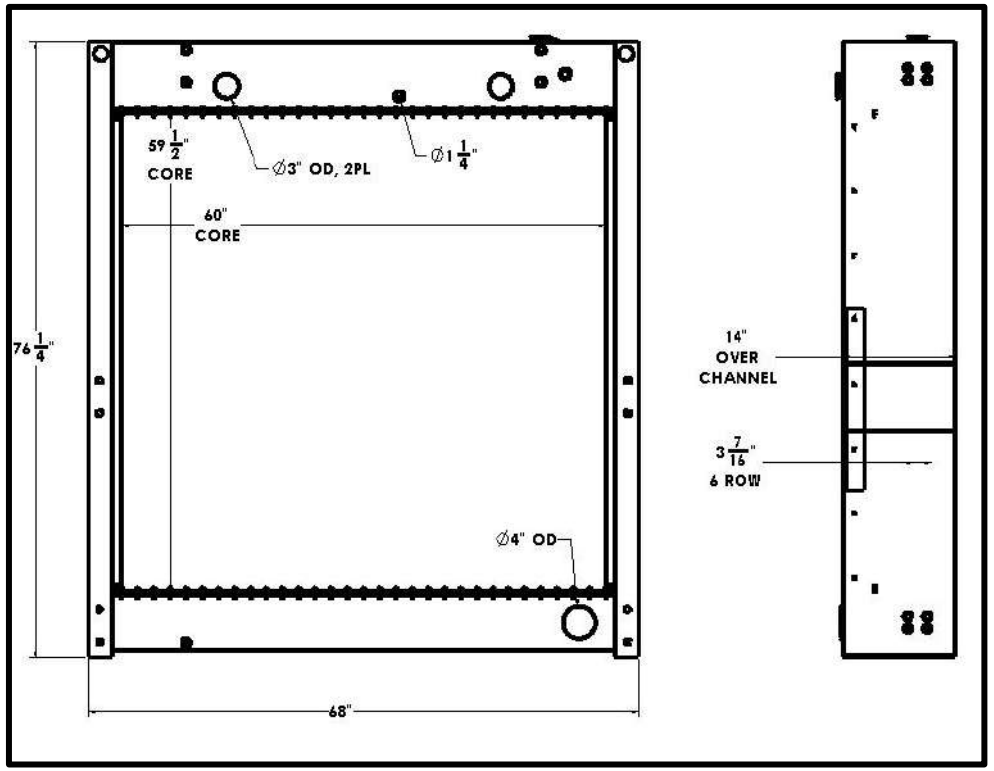

Overall Dimensions: 76-1/4” X 68” X 14”
Core: 59-1/2” X 60” X 6 Row
Inlet: 3” OD (2PL)
Outlet: 4” OD

Listed dimensions may vary slightly from OE

BGR Part Number: BT-0093-6Y
MODINE M-40-EF, 1A15434

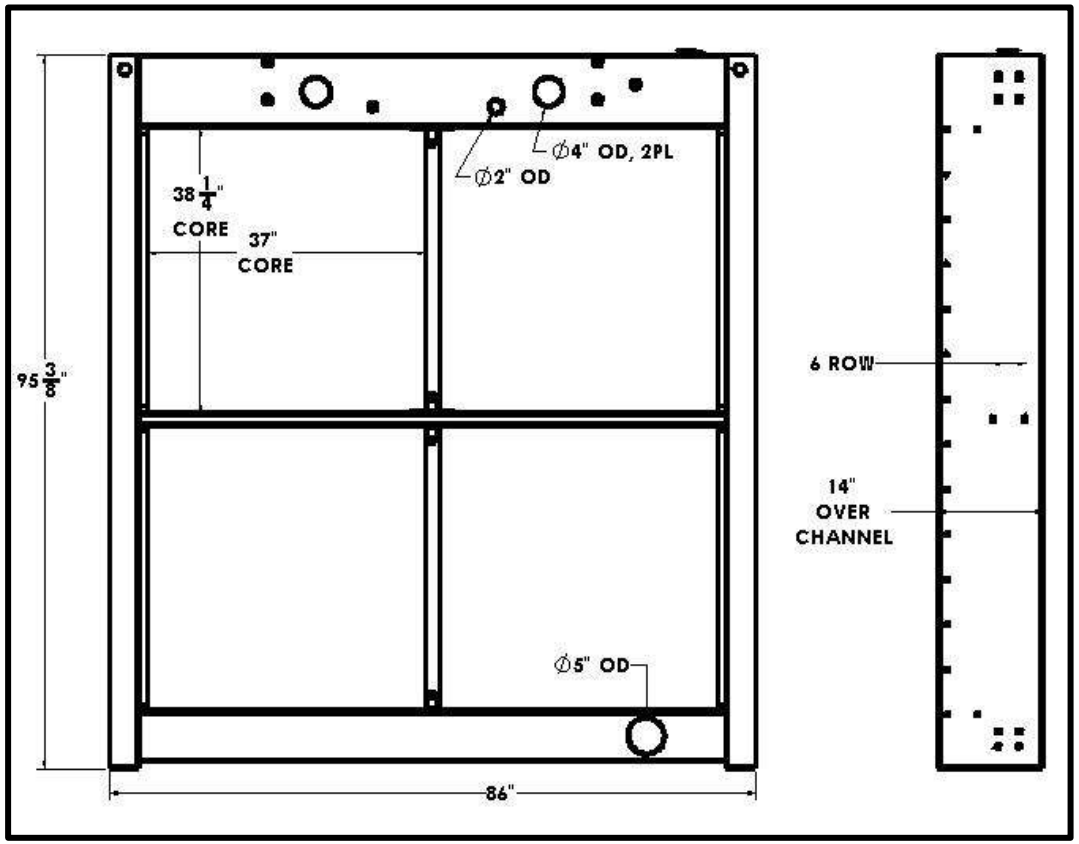

Overall Dimensions: 95-3/8” X 86” X 14”
Core: 38-1/4” X 37” X 6 ROW (4 CORES)
Inlet: 4” OD
Outlet: 5” OD

Tel 1.800.774.2168
www.bgrradiator.com

BGR Part Number: BT-0094-7I
ONAN PART NUMBER 130-3615, 130-4167

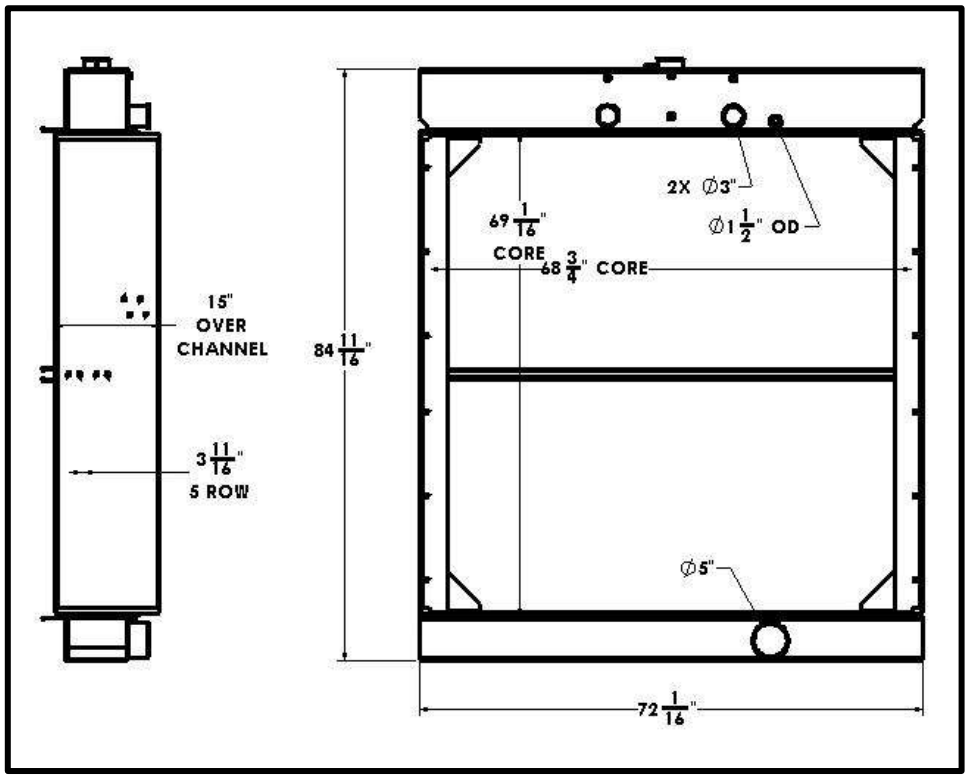

Overall Dimensions: 84-11/16” X 72-1/16” X 15”
Core: 69-1/16” X 68-3/4” X 7 Row (2 CORES)
Inlet: 3” OD (2PL)
Outlet: 5” OD

Listed dimensions may vary slightly from OE

BGR Part Number: BT-0095-6Y
CUMMINS PART NUMBER 184367

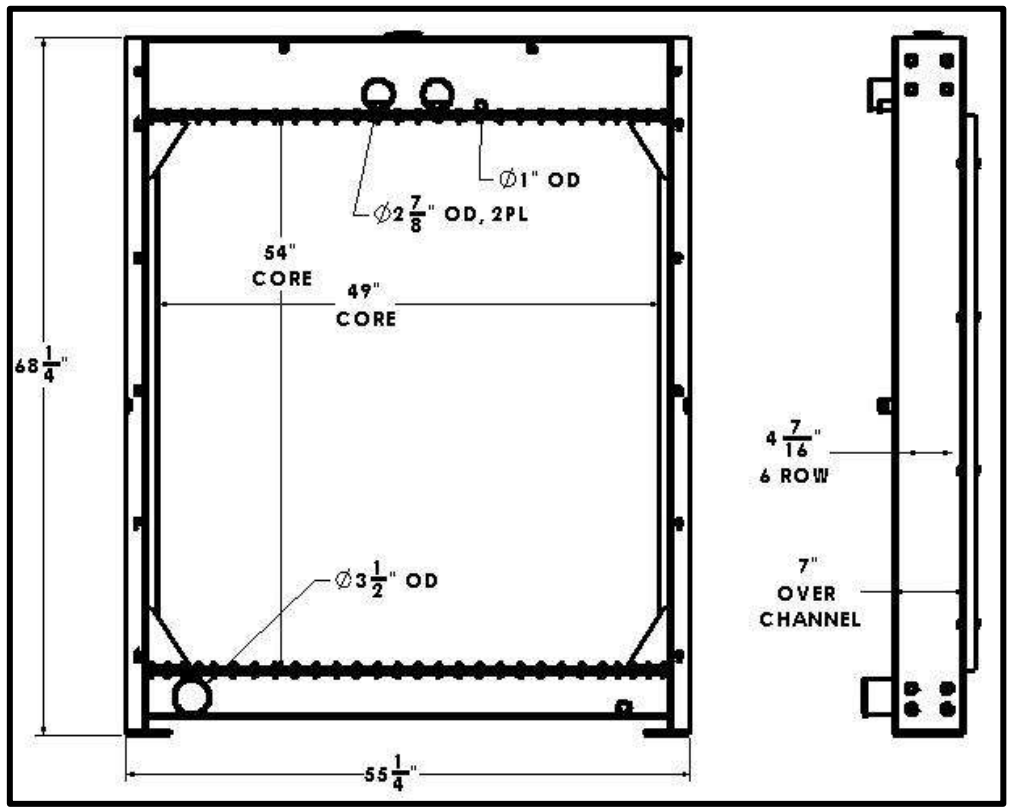

Overall Dimensions: 68-1/4” X 55-1/4” X 7”
Core: 54” X 49” X 6 ROW (OE UNIT HAS 2 CORES)
Inlet: 2-7/8” OD (2PL)
Outlet: 3-1/2” OD

Tel 1.800.774.2168
www.bgrradiator.com

BGR Part Number: BT-0096-6Y
MODINE M-16-EF

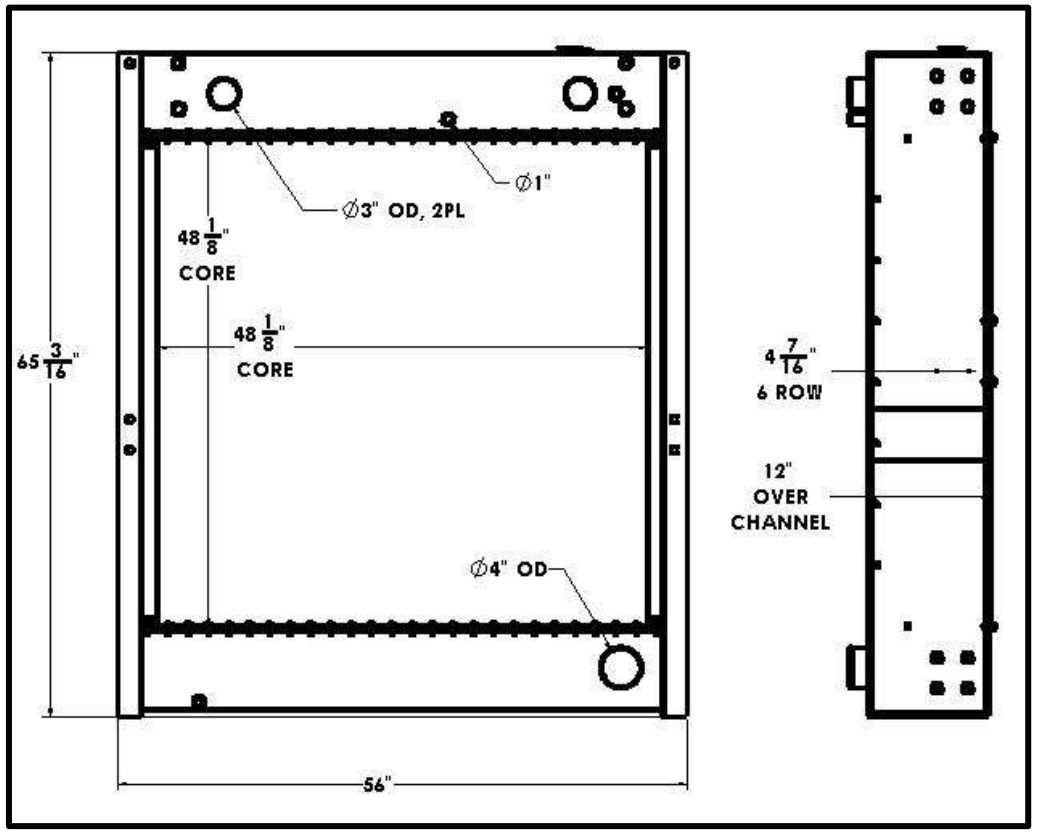

Overall Dimensions: 65-3/16” X 56” X 12”
Core: 48-1/8” X 48-1/8” X 6 Row
Inlet: 3” OD (2PL)
Outlet: 4” OD

Listed dimensions may vary slightly from OE

BGR Part Number: BT-0097-5I
ONAN PART NUMBER 130-1011

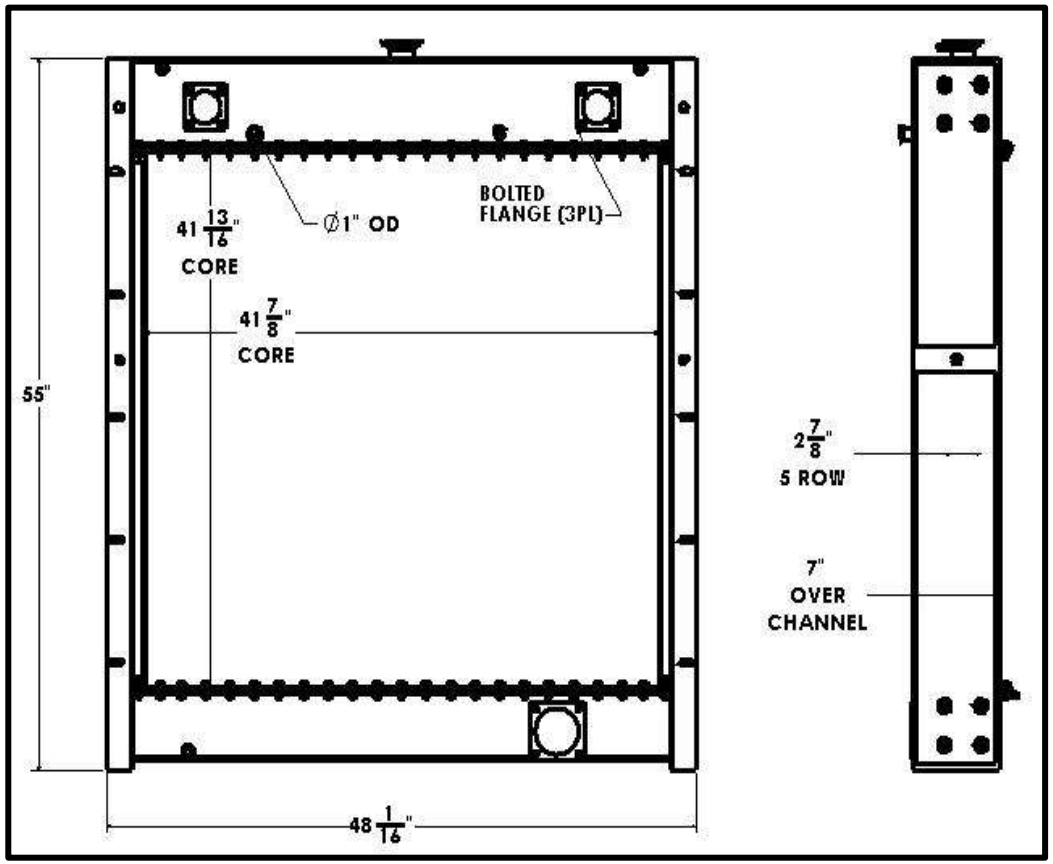

Overall Dimensions: 55” X 48-1/16” X 7”
Core: 41-13/16” X 41-7/8” X 5 ROW
Inlet: BOLTED FLANGE (2PL)
Outlet: BOLTED FLANGE

Tel 1.800.774.2168
www.bgrradiator.com

BGR Part Number: BT-0098-5I
QUALITY STAMPING & TUBE 64374

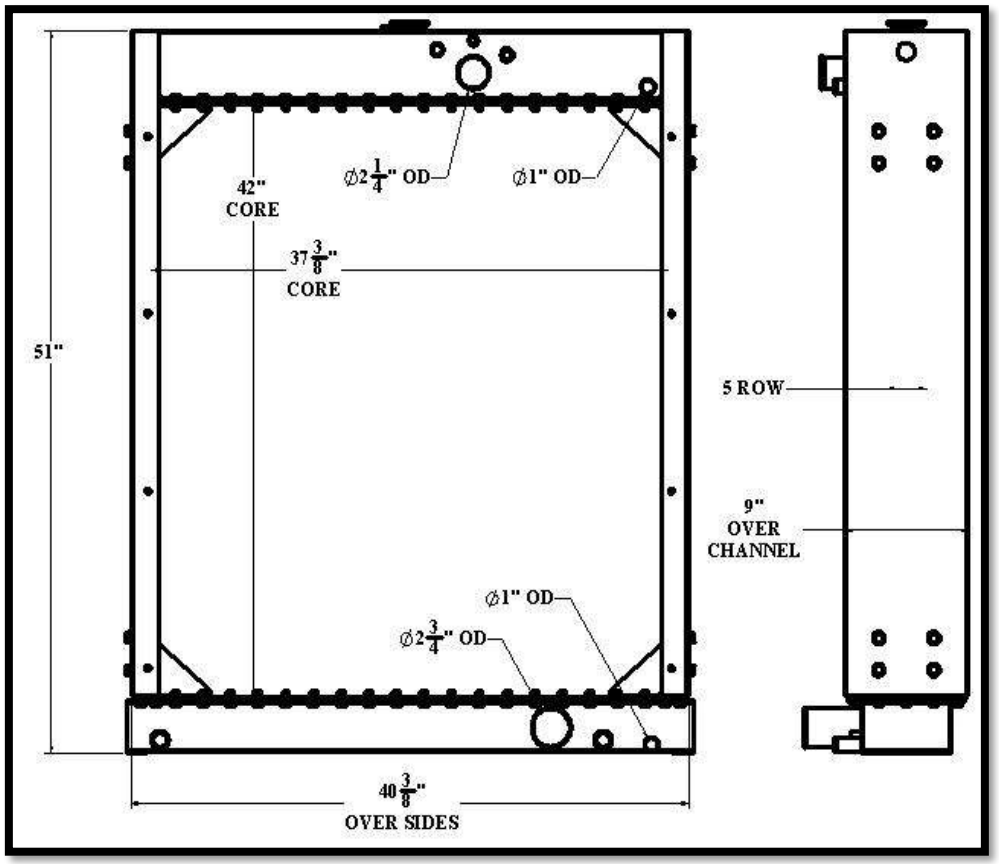

Overall Dimensions: 51” X 40-3/8” X 9”
Core: 42” X 37-3/8” X 5 ROW
Inlet: 2-1/4” OD
Outlet: 2-3/4” OD

Listed dimensions may vary slightly from OE

BGR Part Number: BT-0099-4I
BEARWARD 5638700000, PERKINS 120-663

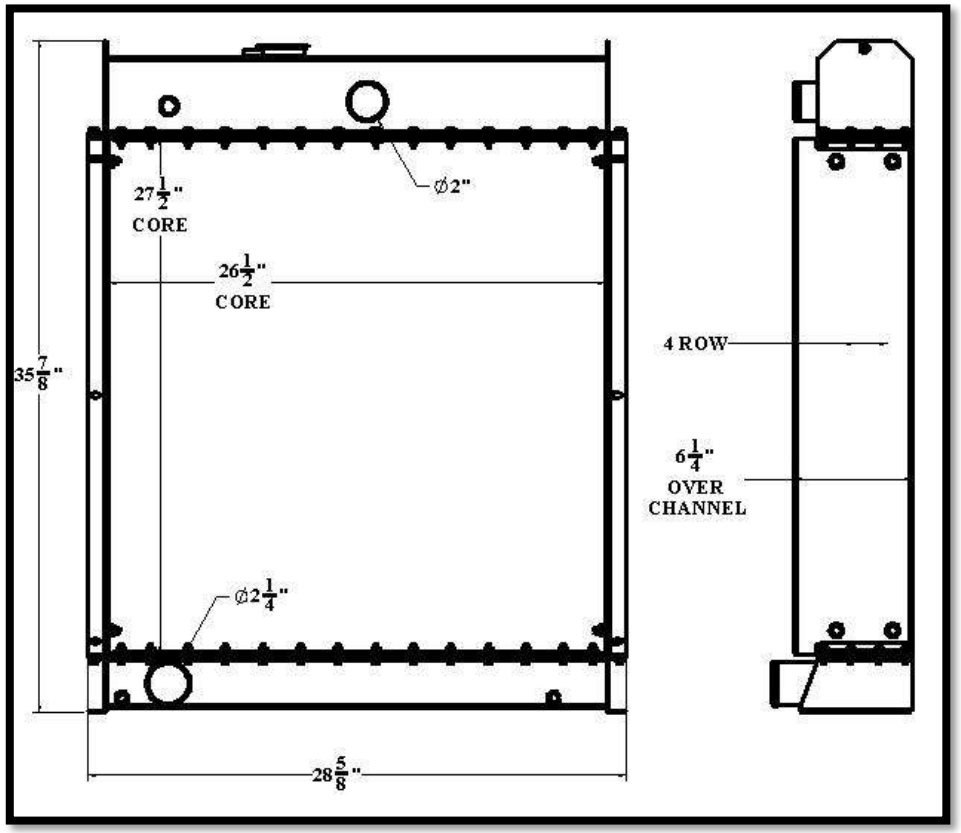

Overall Dimensions: 35-7/8” X 28-5/8” X 6-1/4”
Core: 27-1/2” X 26-1/2” X 4 ROW
Inlet: 2” OD
Outlet: 2-1/4”

Tel 1.800.774.2168
www.bgrradiator.com

BGR Part Number: BT-0100-7M
BTCT0T7043

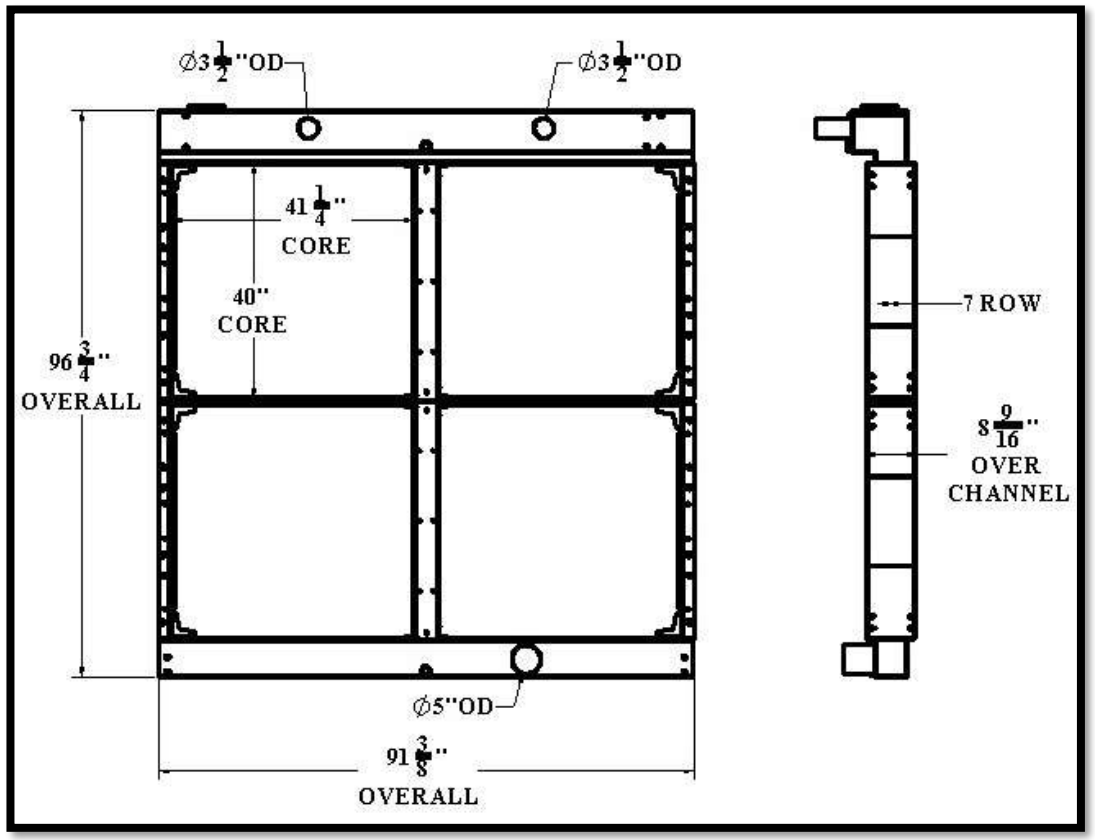

Overall Dimensions: 96-3/4” X 91-3/8” X 8-9/16”
Core: 40” X 41-1/4” X 7 ROW
Inlet: 3-1/2”OD 2PL
Outlet: 5”OD

Listed dimensions may vary slightly from OE

BGR Part Number: BT-0101-8I
WAUKESHA 400KW GENSET

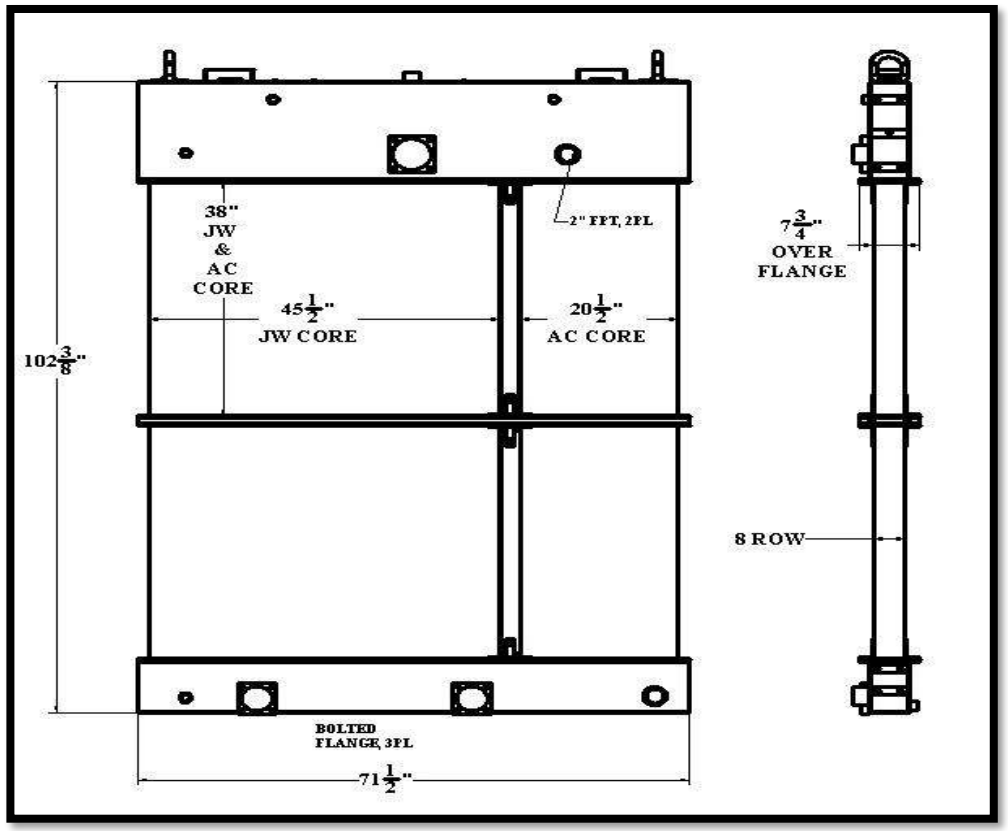

Overall Dimensions: 102-3/8” X 71-1/2” X 7-3/4”
JW Core: 38” X 45-1/2” X 8 ROW
AC Core: 38” X 20-1/2” X 8 ROW
Inlet: BOLTED FLANGE
Outlet: BOLTED FLANGE (2PL)

Tel 1.800.774.2168
www.bgrradiator.com

BGR Part Number: BT-0102-7I
KTA 38, 2 CORE BEARWARD 5260816, 3050213

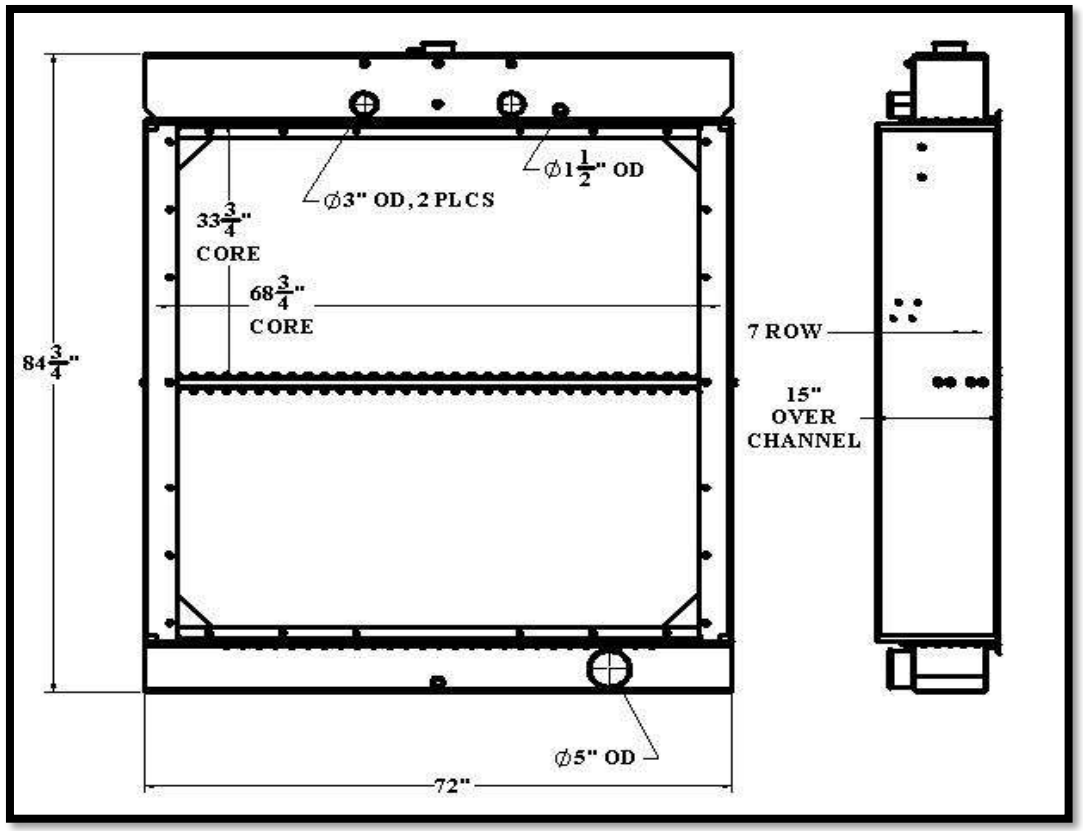

Overall Dimensions: 84-3/4” X 72” X 15”
Core: 33-3/4” X 68-3/4” X 7 ROW
Inlet: 3” OD (2PL)
Outlet: 5” OD

Listed dimensions may vary slightly from OE

BGR Part Number: BT-0103-5Y
ELGIN WITH 01-0083

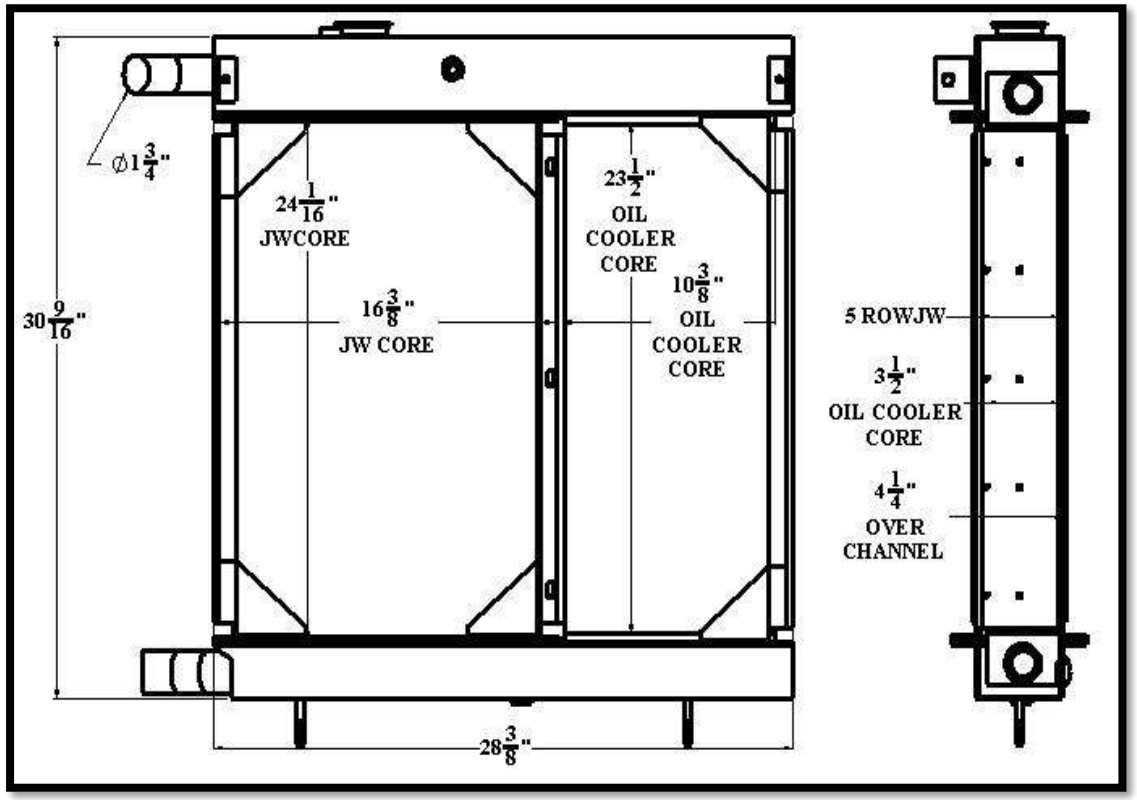

Overall Dimensions: 30-9/16” X 28-3/8” X 4-1/4”
JW Core: 24-1/16” X 16-3/8” X 5 ROW
Inlet: 1-3/4” OD
Outlet: 1-3/4” OD

Tel 1.800.774.2168
www.bgrradiator.com

BGR Part Number: BT-0104-5O
YOUNG RADIATOR, 146033

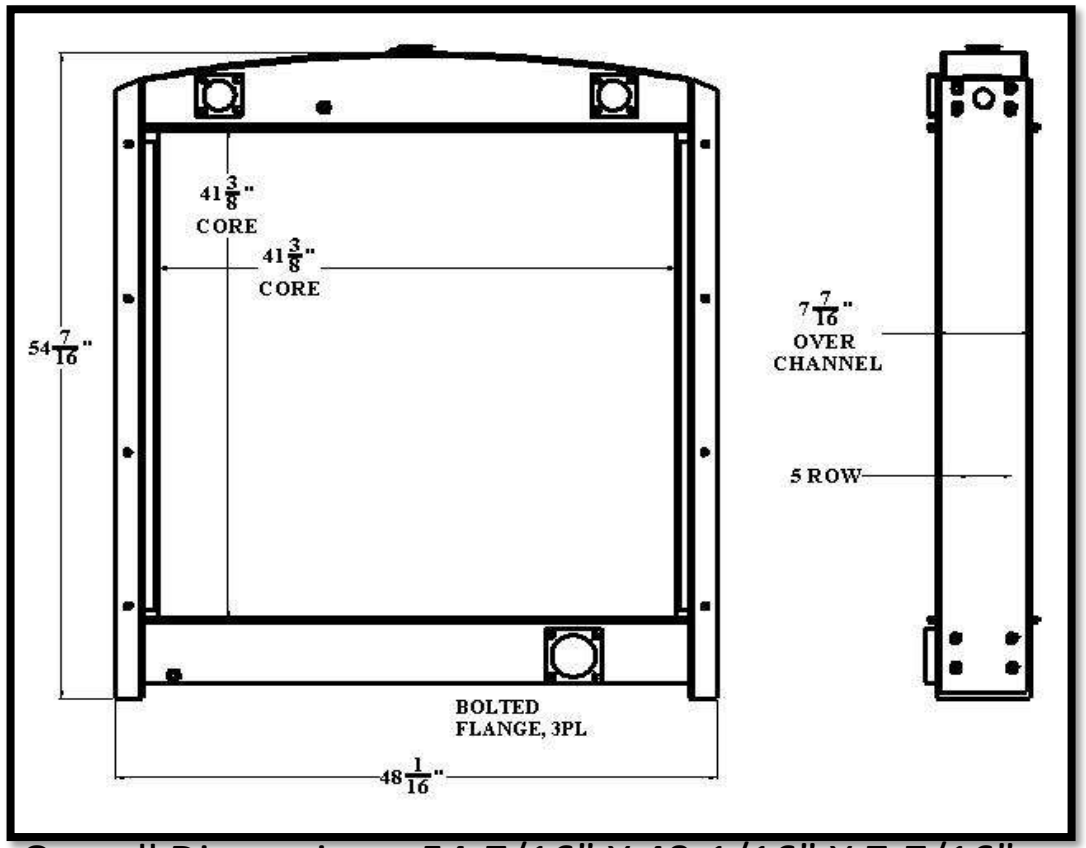

Overall Dimensions: 54-7/16” X 48-1/16” X 7-7/16”
Core: 41-3/8” X 41-3/8” X 5 ROW
Inlet: BOLTED FLANGE
Outlet: BOLTED FLANGE

Listed dimensions may vary slightly from OE

BGR Part Number: BT-0105-4R
RAD SPEC RFC-005-13R

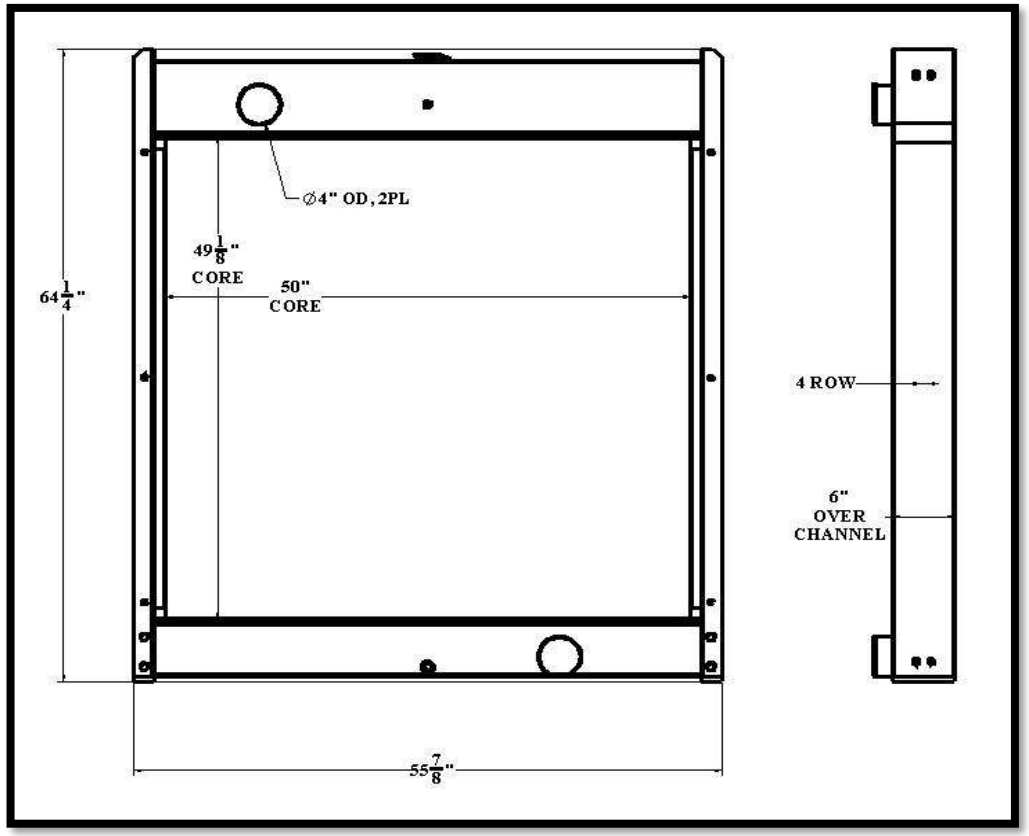

Overall Dimensions: 64-1/4” X 55-7/8” X 6”
Core: 49-1/8” X 50” X 4 ROW
Inlet: 4” OD
Outlet: 4” OD

Tel 1.800.774.2168
www.bgrradiator.com

BGR Part Number: BT-0106-5Y
A-272616. 1A15778-CORRECT

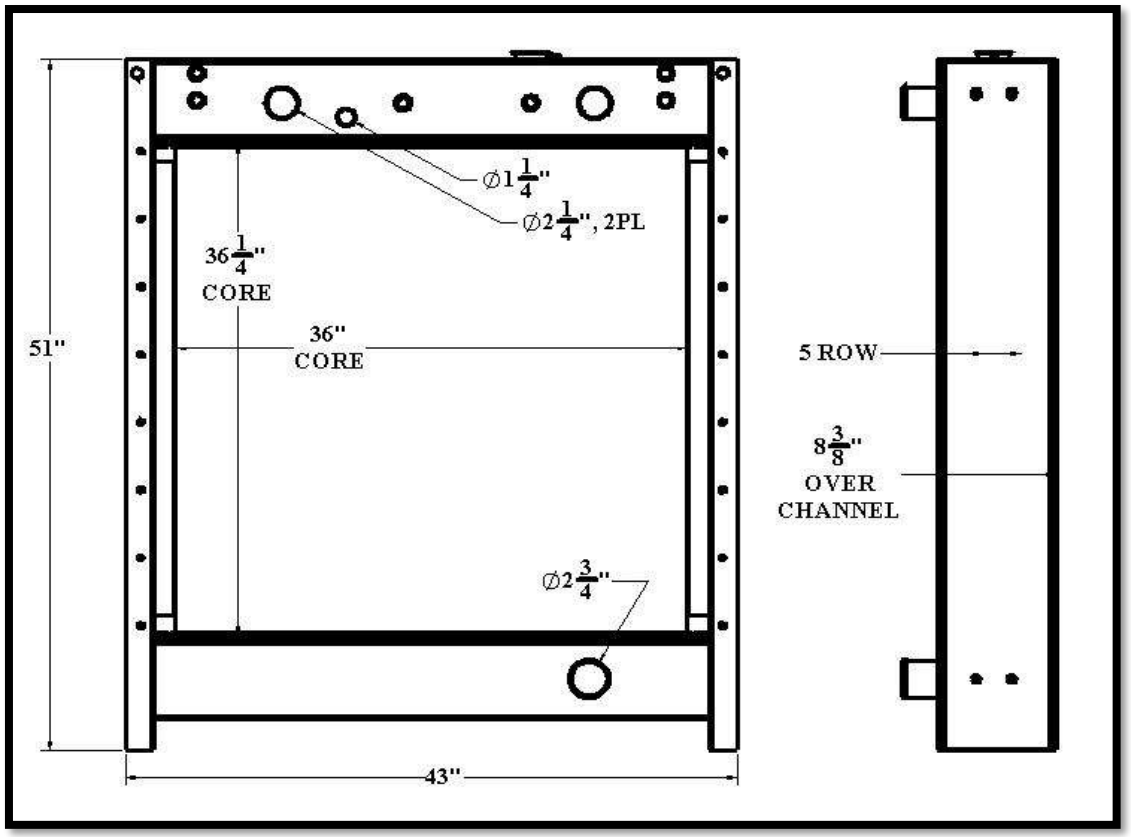

Overall Dimensions: 51” X 43” X 8-3/8”
Core: 36-1/4” X 36” X 5 ROW
Inlet: 2-1/4” OD (2PL)
Outlet: 2-3/4” OD

Listed dimensions may vary slightly from OE

BGR Part Number: BT-0107-6Y
CUMMINS

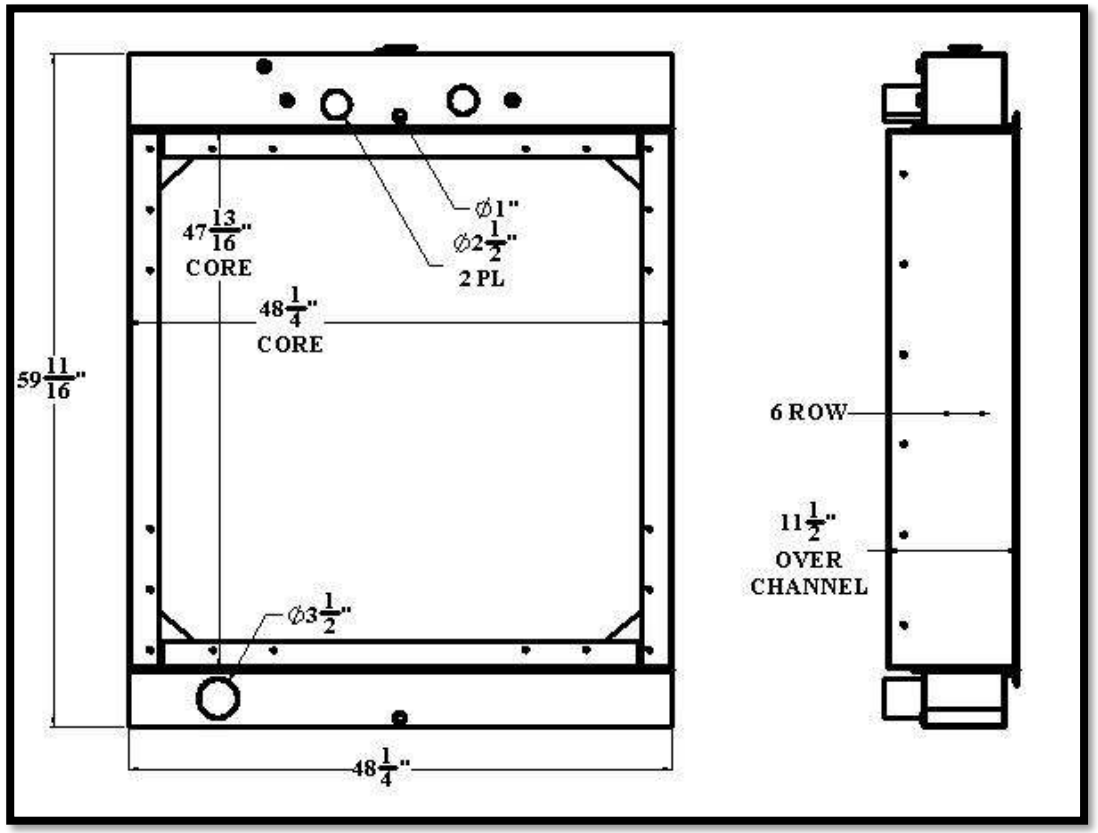

Overall Dimensions: 59-11/16” X 48-1/4” X 11-1/2”
Core: 47-13/16” X 48-1/4” X 6 ROW
Inlet: 2-1/2” OD (2PL)
Outlet: 3-1/2” OD

Tel 1.800.774.2168
www.bgrradiator.com

BGR Part Number: BT-0108-4R
CATERPILLAR GENSET

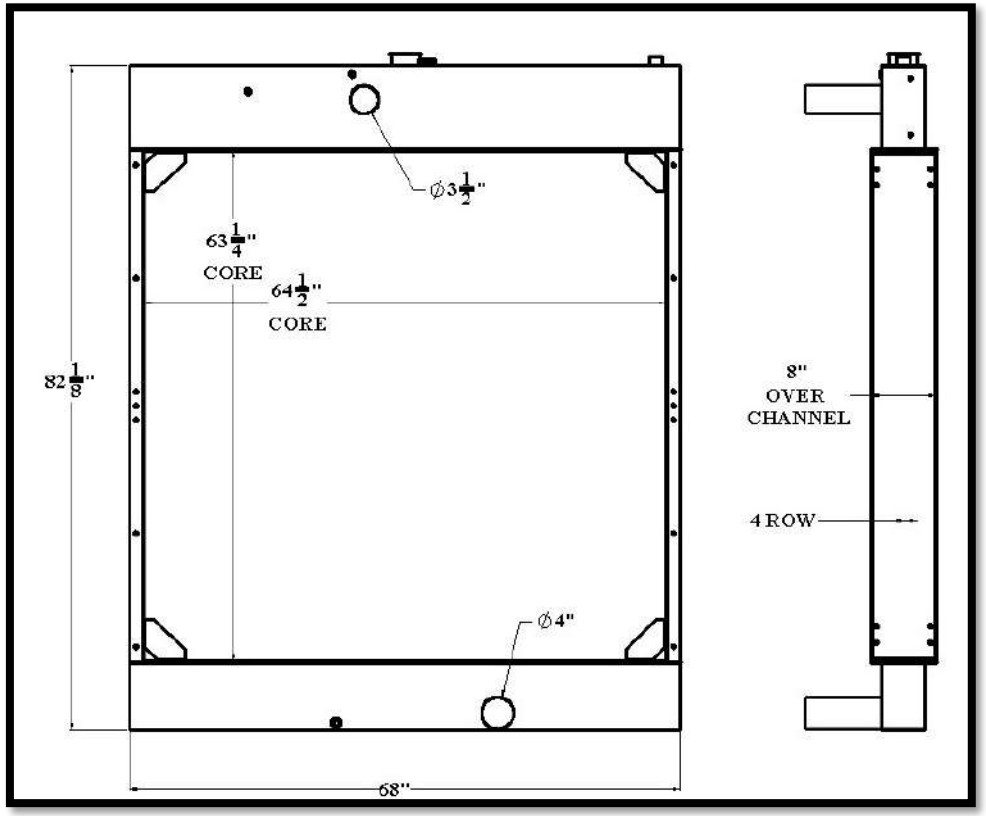

Overall Dimensions: 82-1/8” X 68” X 8”
Core: 63-3/8” X 64-1/2” X 4 ROW
Inlet: 3-1/2” OD
Outlet: 4” OD

Listed dimensions may vary slightly from OE

BGR Part Number: BT-0109-5I5I
CUMMINS 179-4759-01, A030D348

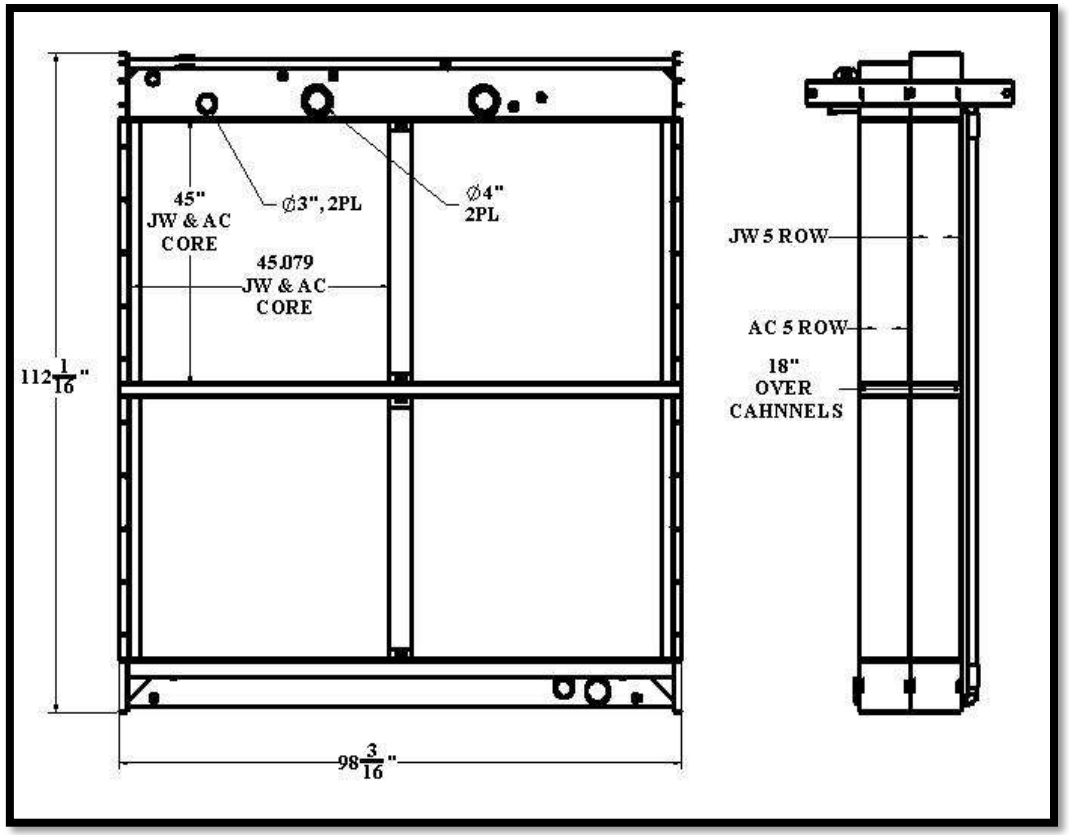

Overall Dimensions: 112-1/16 X 98-3/16” 18”
JW & AC Core: 45” X 45.079” X 5 ROW
JW Inlet: 4” (2PL), JW Outlet: 4”
AC Inlet: 3” , AC Outlet: 3”

Tel 1.800.774.2168
www.bgrradiator.com

BGR Part Number: BT-0110-5R
450KW SUPERIOR 450-R-161, PPN: CRE-8637

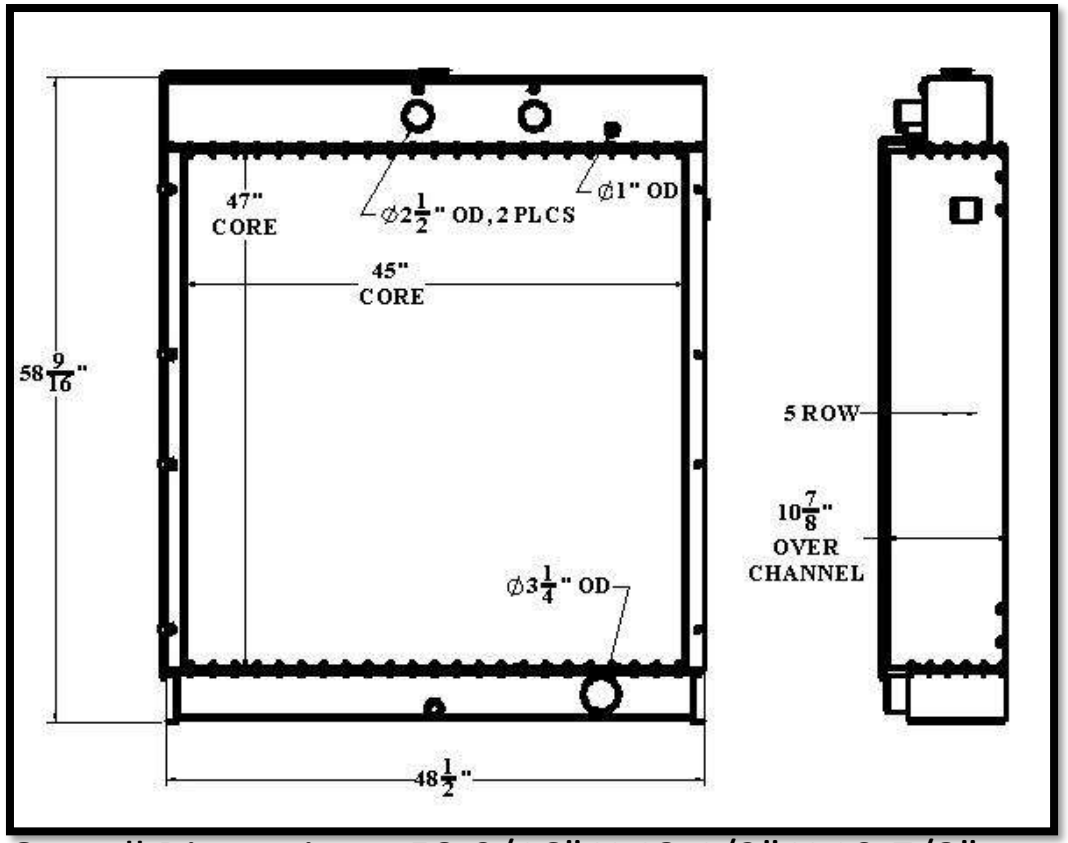

Overall Dimensions: 58-9/16” X 48-1/2” X 10-7/8”
Core: 47” X 45” X 5 ROW
Inlet: 2-1/2” OD (2PL)
Outlet: 3-1/4” OD

Listed dimensions may vary slightly from OE

BGR Part Number: BT-0111-5Y
A-282888, GTD/CPP 10001291

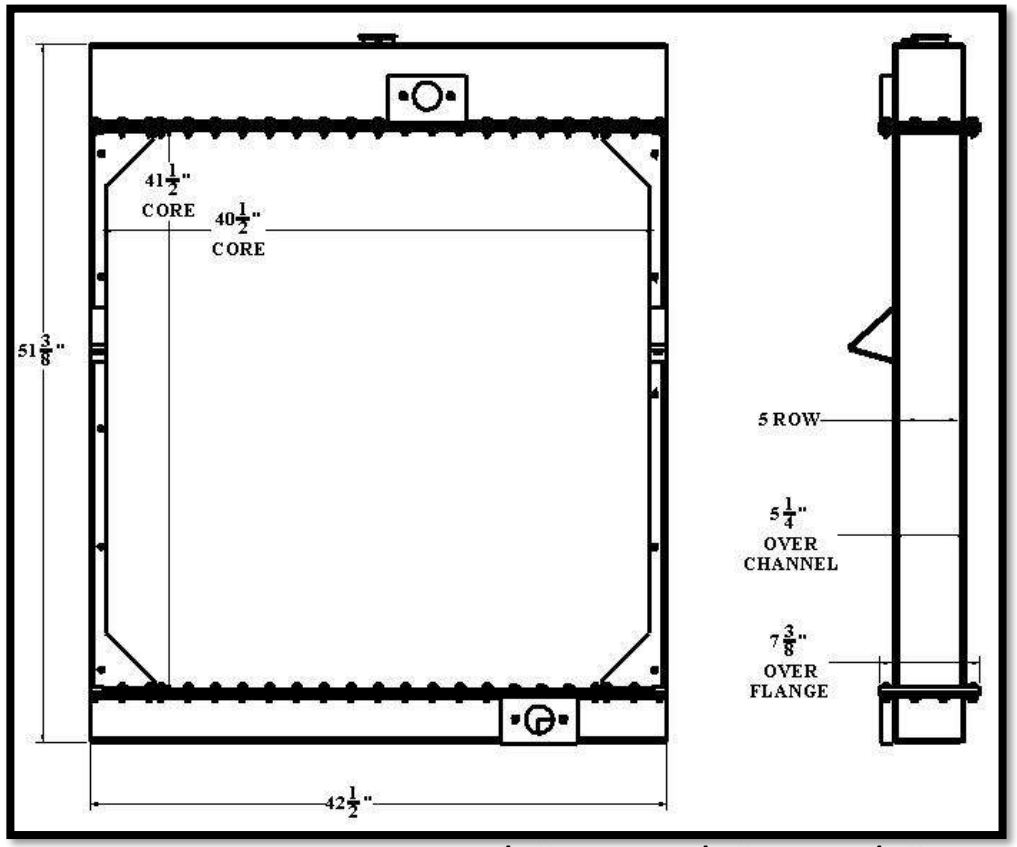

Overall Dimensions: 51-3/8” X 42-1/2” X 5-1/4”
Core: 41-1/2” X 40-1/2” X 5 ROW
Inlet: BOLTED FLANGE
Outlet: BOLTED FLANGE

Tel 1.800.774.2168
www.bgrradiator.com

BGR Part Number: BT-0112-8I
GTD/CPP 10001291

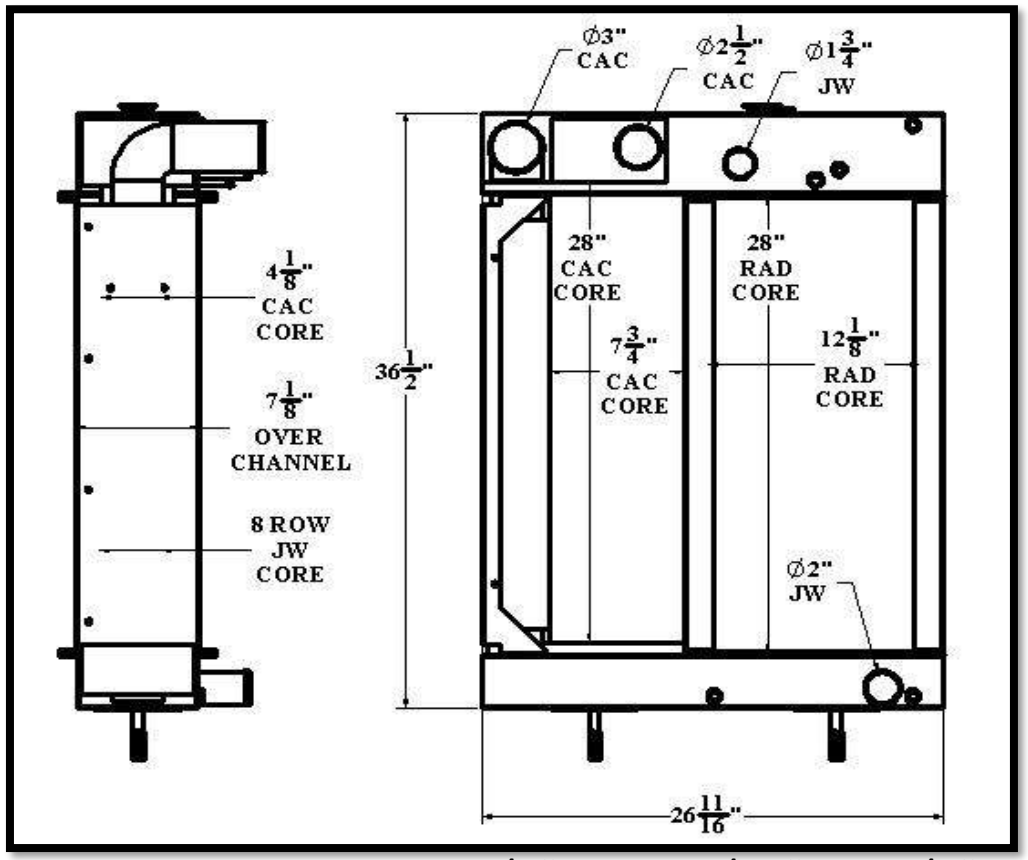

Overall Dimensions: 36-1/2” X 26-11/16” X 7-1/8”
Core: 28” X 12-1/8” X 8 ROW
Inlet: 1-3/4” OD
Outlet: 2” OD

Listed dimensions may vary slightly from OE

BGR Part Number: BT-0113-5O

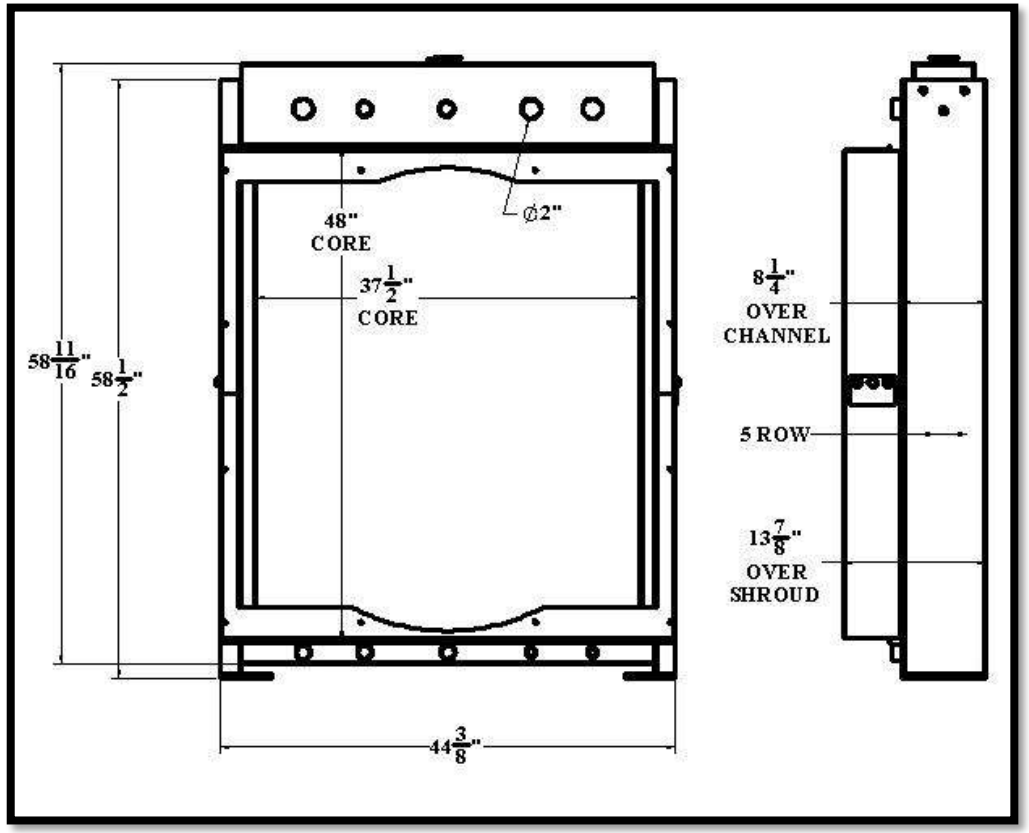

Overall Dimensions: 58-11/16” X 44-3/8” X 8-1/4”
Core: 48” X 37-1/2” X 5 ROW
Inlet: 2” OD
Outlet: 2” OD

Tel 1.800.774.2168
www.bgrradiator.com

BGR Part Number: BT-0114-6Y
IEA ECO60581

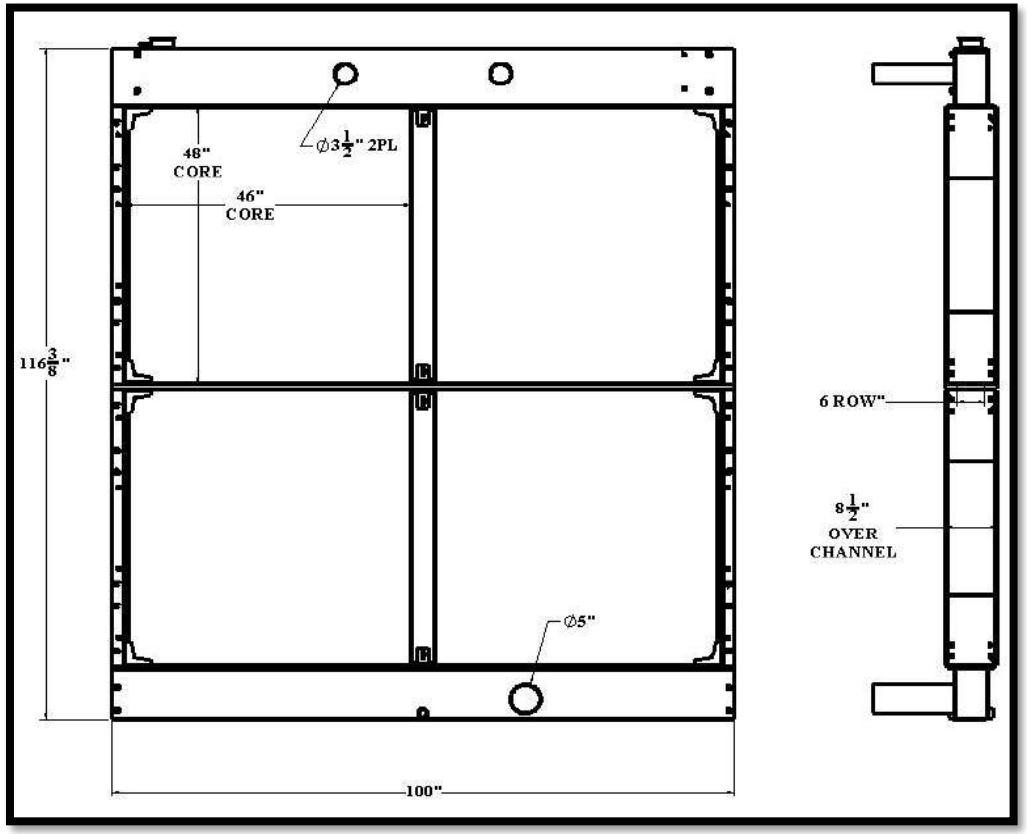

Overall Dimensions: 116-3/8” X 100” X 8-1/2”
Core: 48” X 46” X 6 ROW
Inlet: 3-1/2” OD
Outlet: 5” OD

Listed dimensions may vary slightly from OE

BGR Part Number: BT-0115-8I

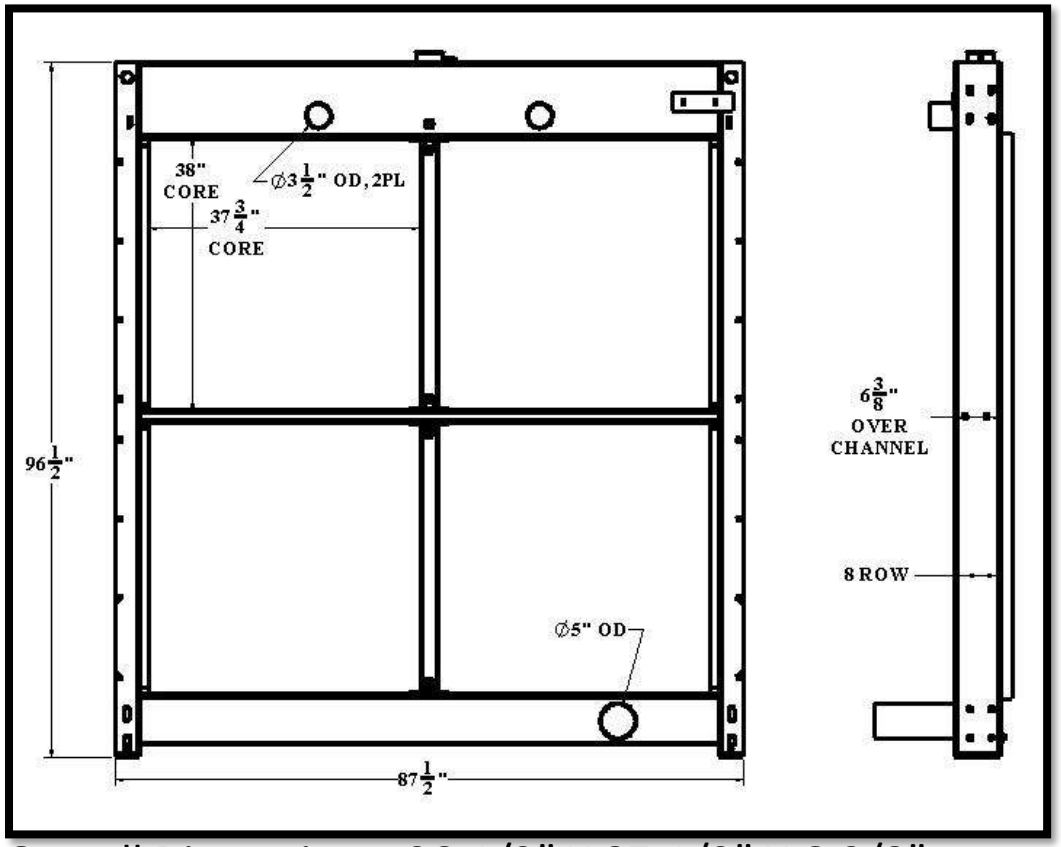

Overall Dimensions: 96-1/2” X 87-1/2” X 6-3/8”
Core: 38” X 37-3/4” X 8 ROW
Inlet: 3-1/2” OD (2PL)
Outlet: 5” OD

Tel 1.800.774.2168
www.bgrradiator.com

BGR Part Number: BT-0116-6Y
MODINE M-12-HR

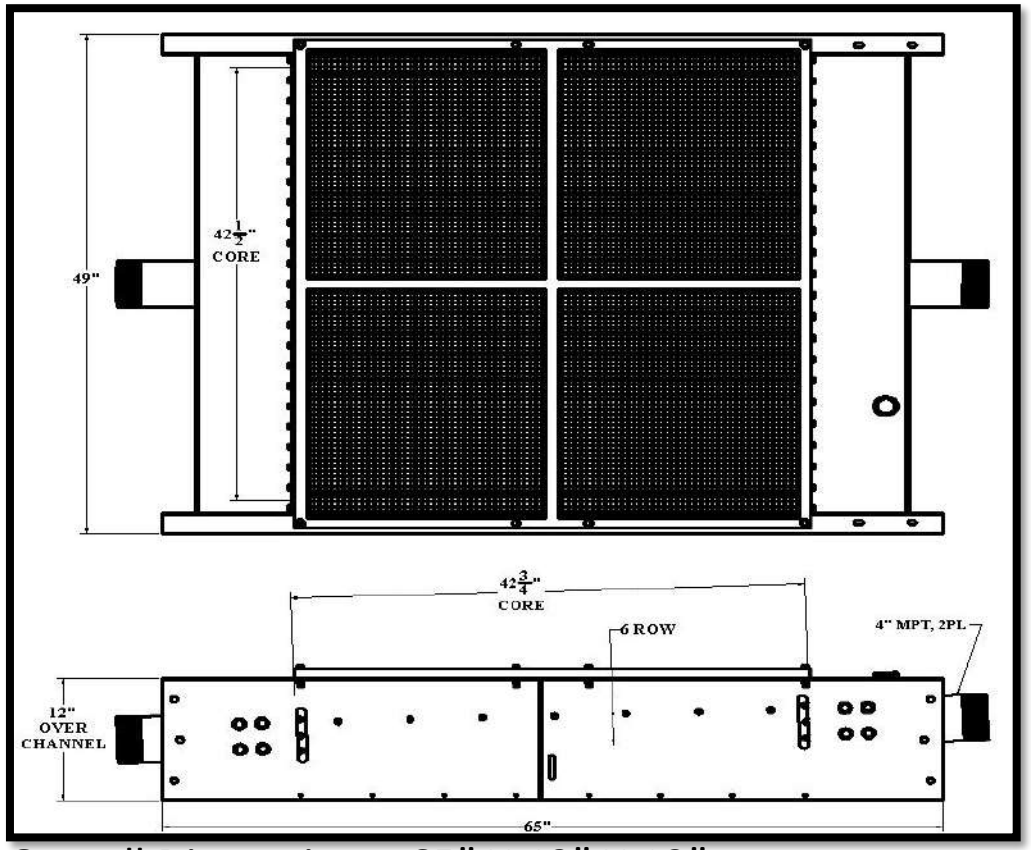

Overall Dimensions: 65” X 49” X 12”
Core: 42-3/4” X 42-1/2” X 6 ROW
Inlet: 4” OD
Outlet: 4” OD

Listed dimensions may vary slightly from OE

BGR Part Number: BT-0117-5O
HUSKY 55K

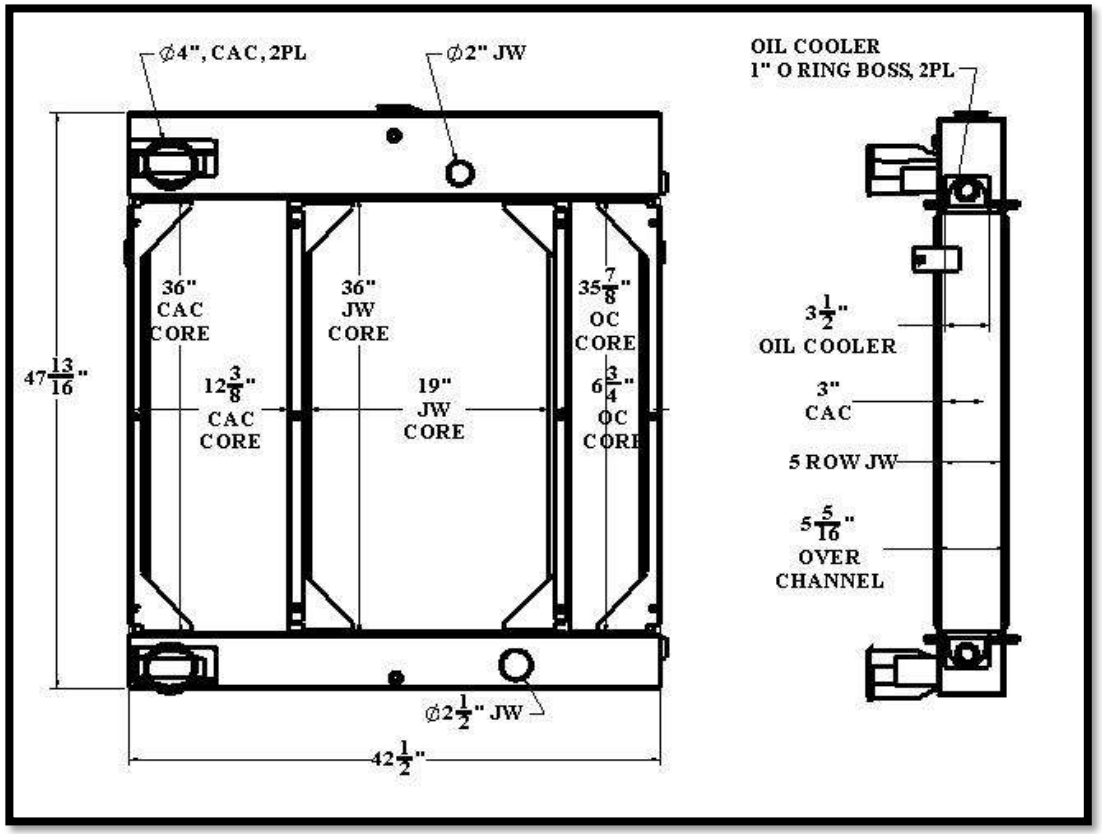

Overall Dimensions: 47-13/16” X 42-1/2 X 5-5/16”
Core: 36” X 19” X 5 ROW
Inlet: 2” OD
Outlet: 2-1/2” OD

Tel 1.800.774.2168
www.bgrradiator.com

BGR Part Number: BT-0118-8N
CATERPILLAR 8N-8836

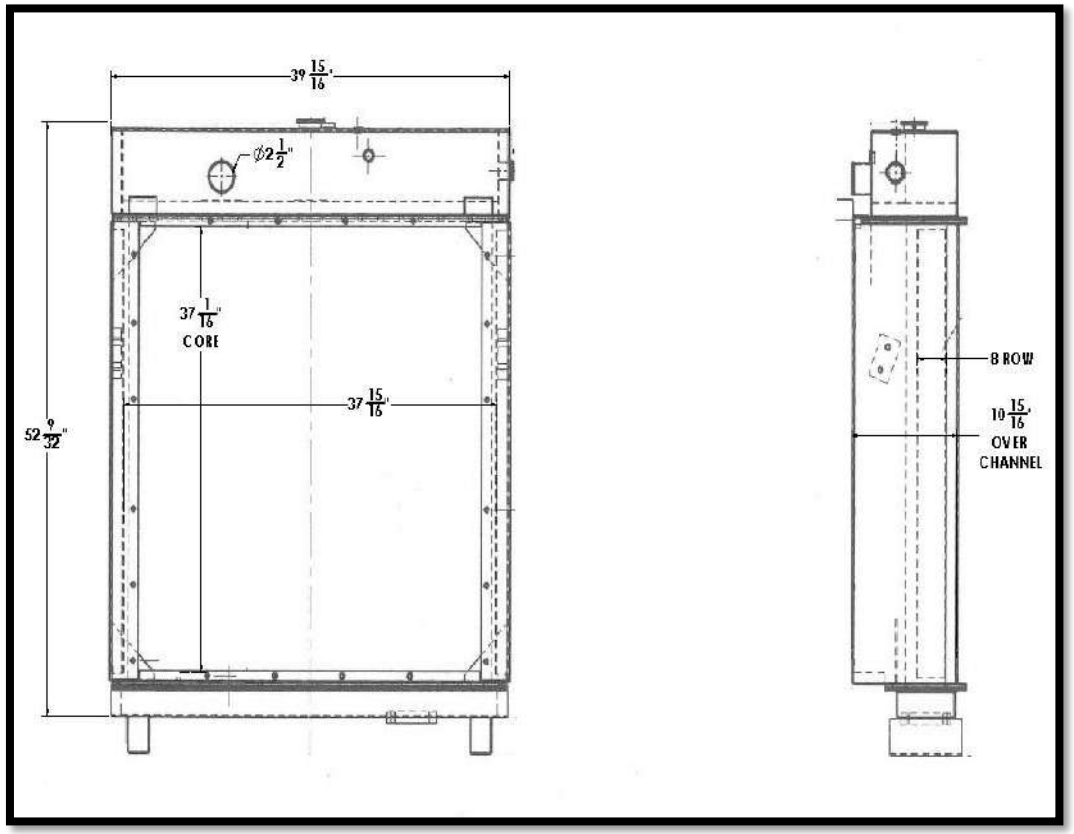

Overall Dimensions: 52-9/32” X 39-15/16” X 10-15/16”
Core: 37-1/16” X 37-15/16” X 8 ROW
Inlet: 2-1/2” OD
Outlet: BOLTED FLANGE

Listed dimensions may vary slightly from OE

BGR Part Number: BT-0119-6Y
ONAN 130-3616

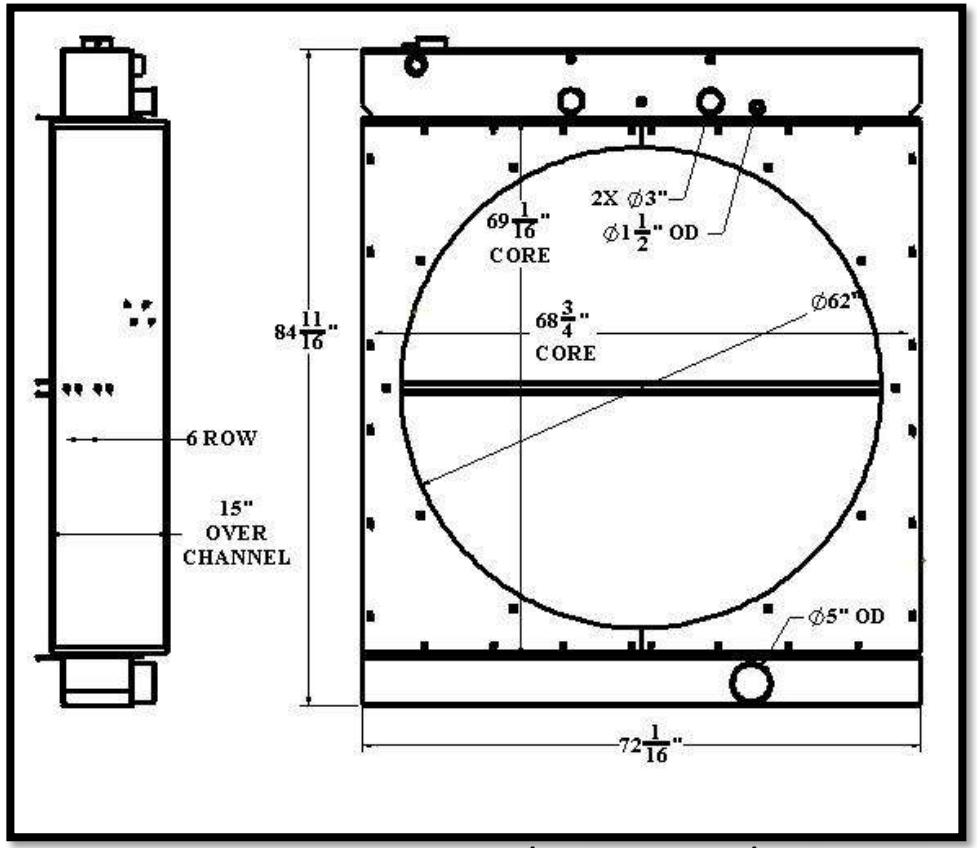

Overall Dimensions: 84-11/16” X 72-1/16” X 15”
Core: 69-1/16” X 68-3/4” X 6 ROW
Inlet: 3” OD
Outlet: 5” OD

Tel 1.800.774.2168
www.bgrradiator.com

BGR Part Number: BT-0120-6Y
Cummins P/N 3050216

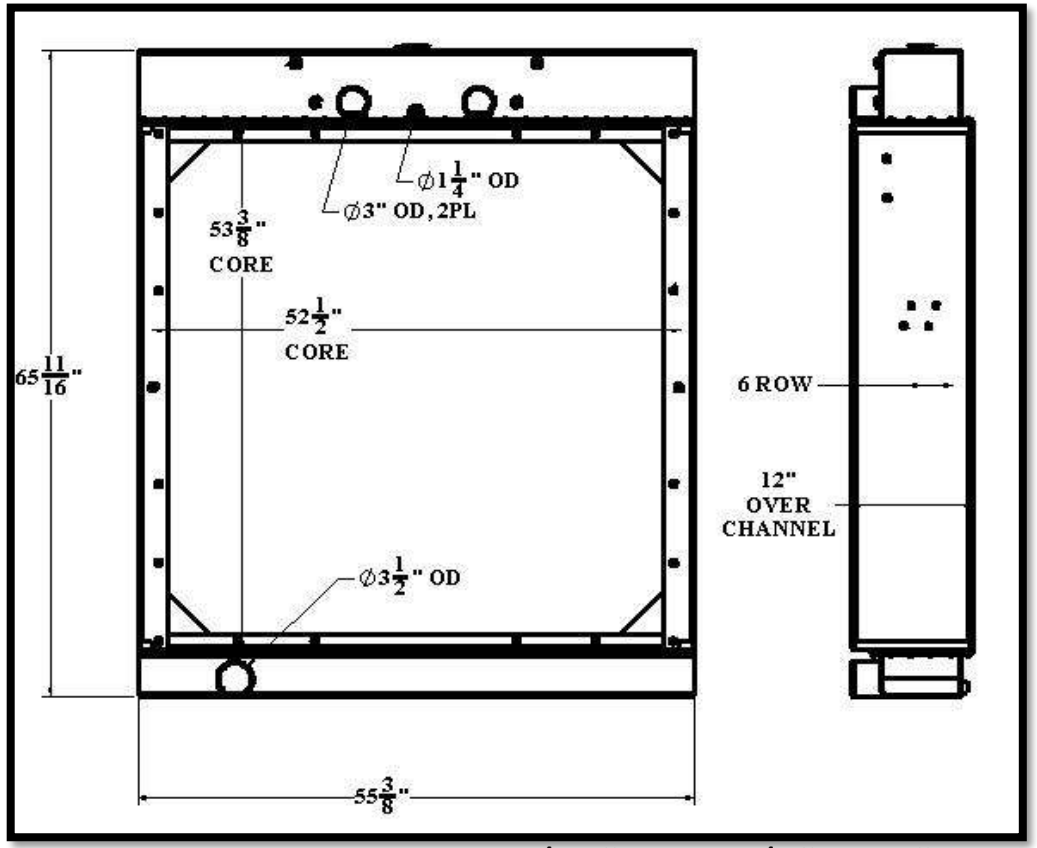

Overall Dimensions: 65-11/16” X 55-3/8” X 12”
Core: 53-3/8” X 52-1/2” X 6 ROW
Inlet: 3” OD
Outlet: 3-1/2” OD

Listed dimensions may vary slightly from OE

BGR Part Number: BT-0121-6T

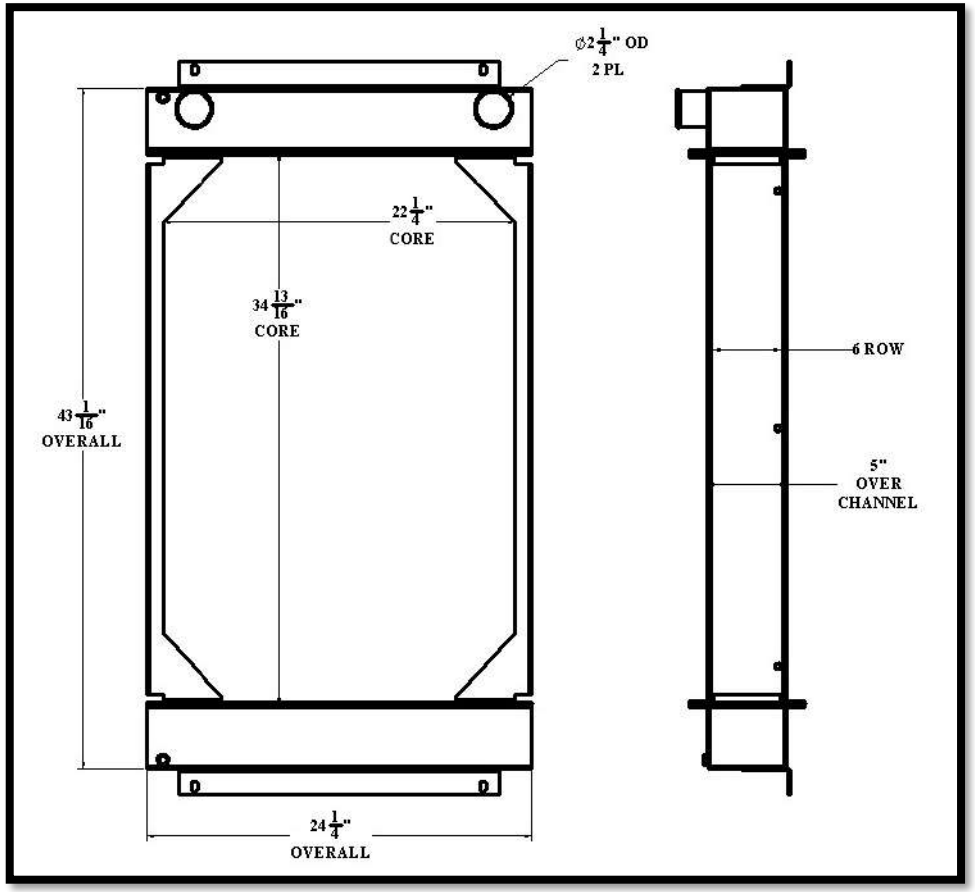

Overall Dimensions: 43-1/16” X 24-1/4” X 15”
Core: 34-13/16” X 22-1/4” X 6 ROW
Inlet: 2-1/4” OD
Outlet: 2-1/4” OD

Tel 1.800.774.2168
www.bgrradiator.com

BGR Part Number: BT-0122-8I
1A18336, A-365020

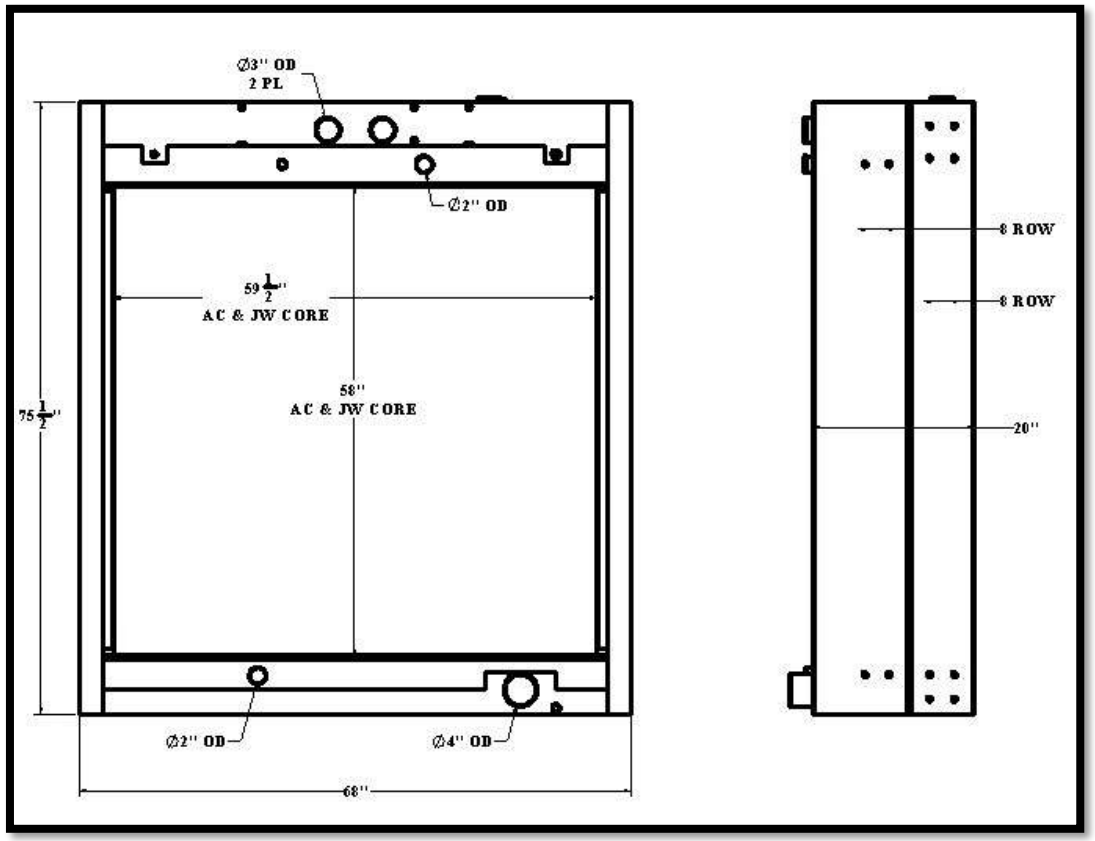

Overall Dimensions: 75-1/2” X 68” X 20”
JW & AC Core: 59-1/2” X 58” X 8 ROW
AC Inlet: 2” OD
AC Outlet: 2” OD
JW Inlet: 3” OD 2 PL
JW Outlet: 4” OD

Listed dimensions may vary slightly from OE

BGR Part Number: BT-0123-6T
API

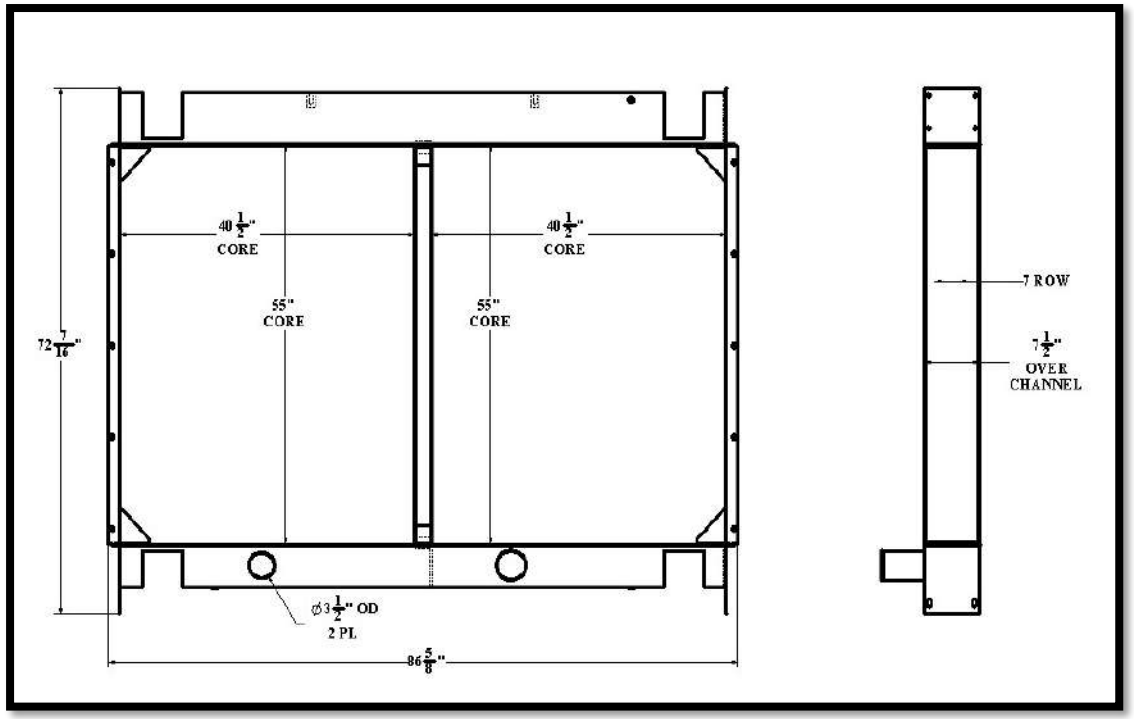

Overall Dimensions: 72-7/16” X 86-5/8” X 7-1/2”
Core: 55” X 40-1/2” X 7 ROW
Inlet: 3-1/2” OD
Outlet: 3-1/2” OD

Tel 1.800.774.2168
www.bgrradiator.com

BGR Part Number: BT-0124-6Z
Cummins 3001254

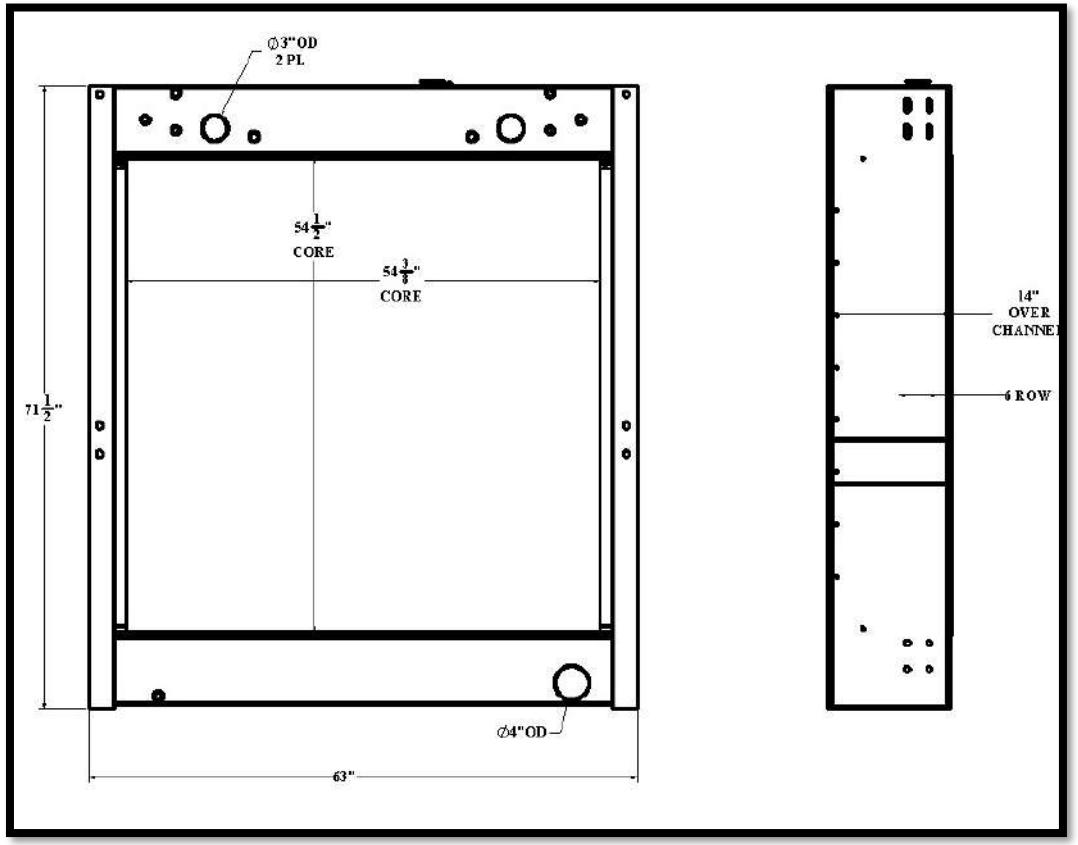

Overall Dimensions: 71-1/2” X 63” X 14”
Core: 54-1/2” X 54-3/8” X 6 ROW
Inlet: 3” OD 2PL
Outlet: 4” OD

Listed dimensions may vary slightly from OE

BGR Part Number: BT-0125

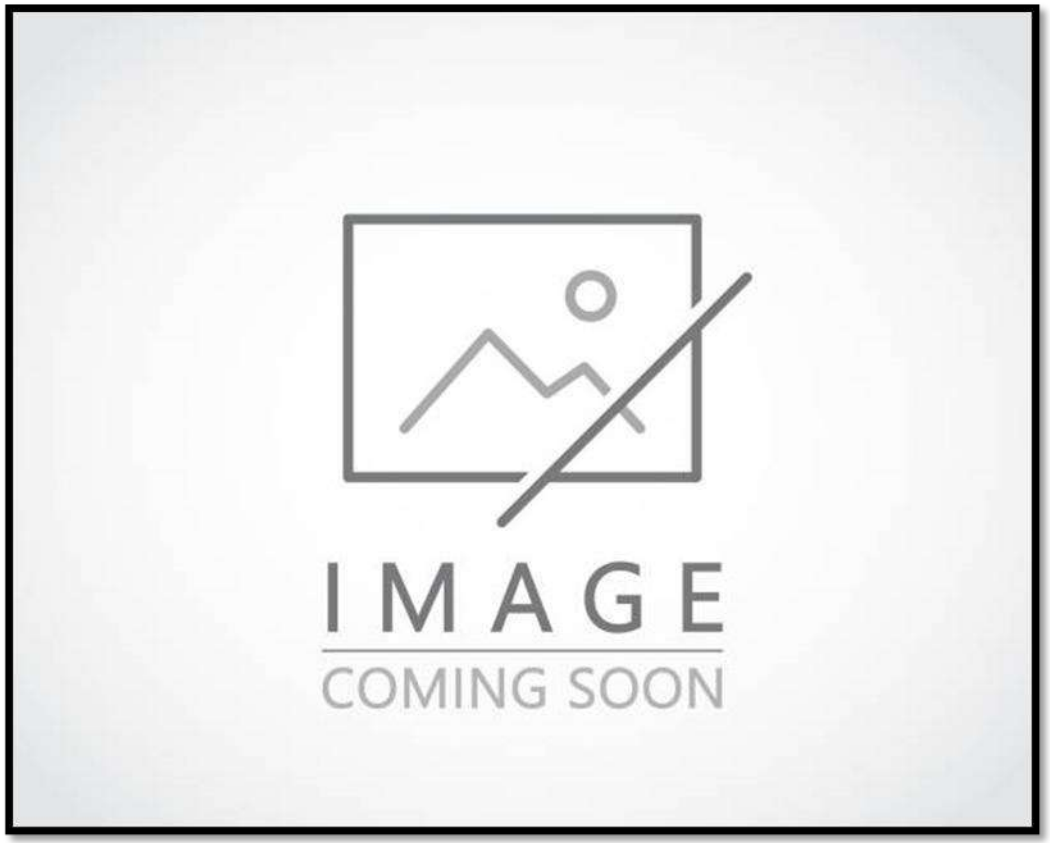

Overall Dimensions:
Core:
Inlet:
Outlet:

Tel 1.800.774.2168
www.bgrradiator.com

BGR Part Number: BT-0126-6M
CATERPILLAR 9Y-6675 Double

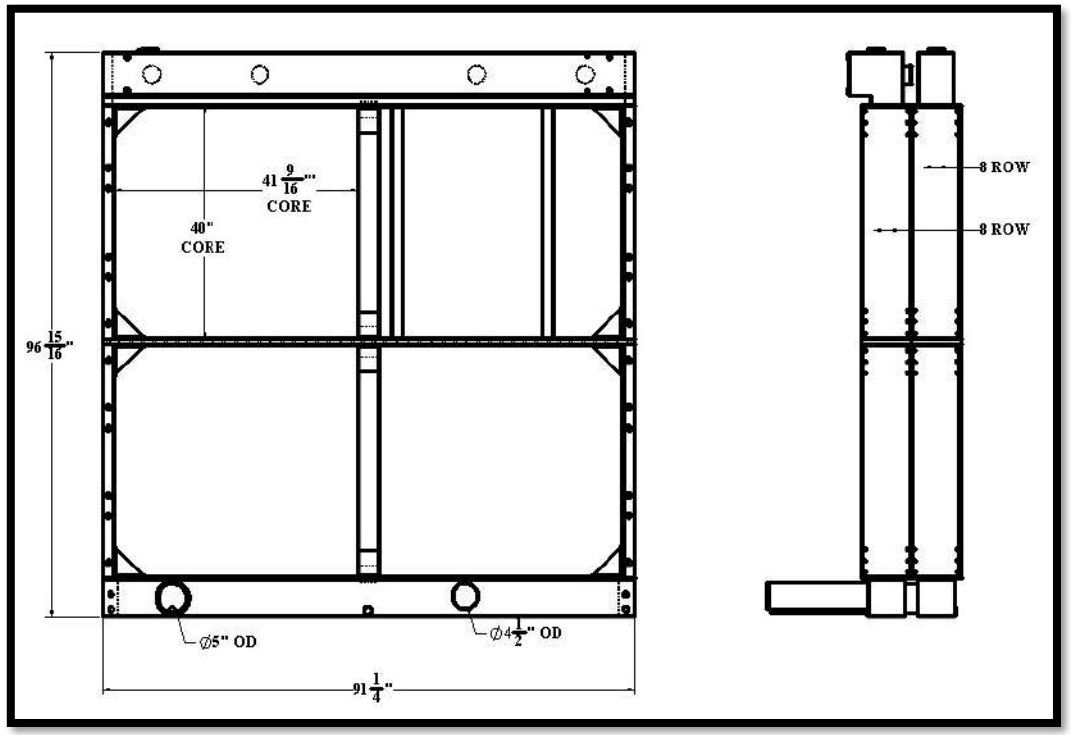

Overall Dimensions: 96-15/16” X 91-1/4” X 17”
Core: 40” X 41-9/16” X 8 ROW
Inlet: 5” OD 2PL
Outlet: 4-1/2” OD

Listed dimensions may vary slightly from OE

BGR Part Number: BT-0127-6M

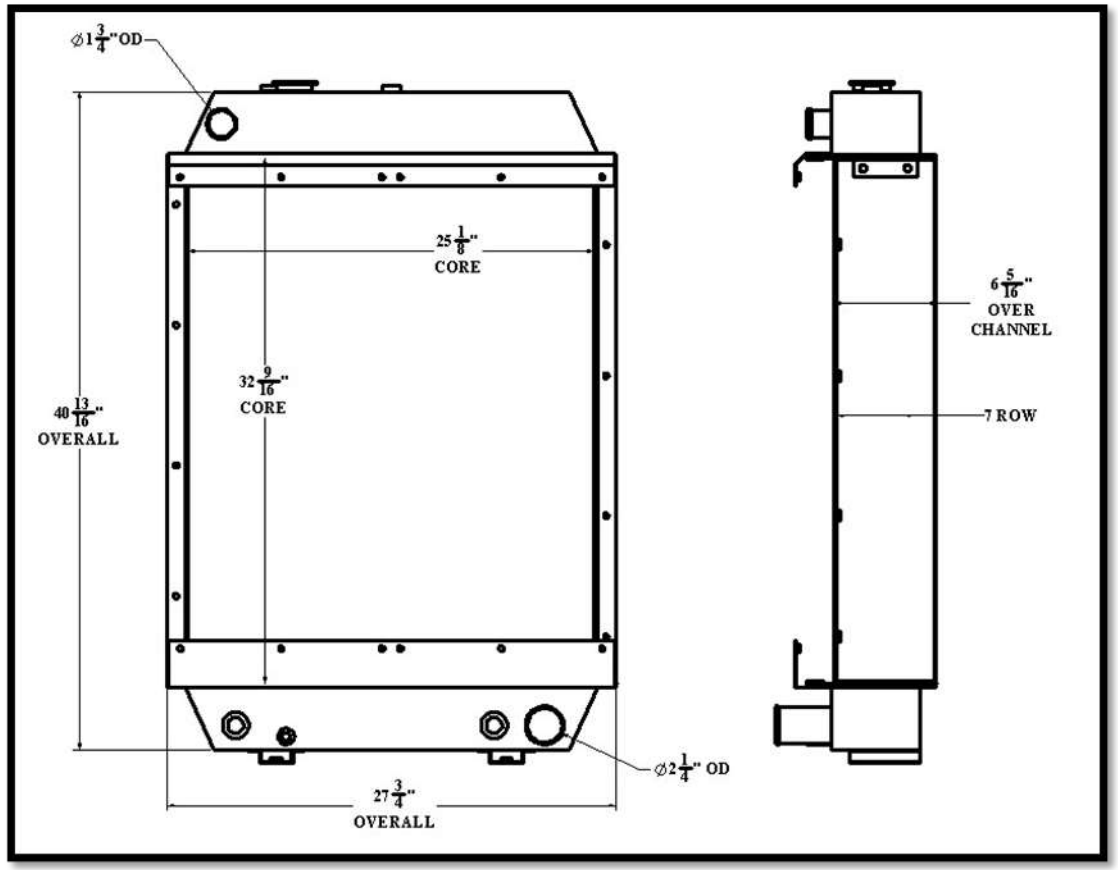

Overall Dimensions: 40-13/16” X 27-3/4” X 6-5/16”
Core: 32-9/16” X 25-1/8” X 7 ROW
Inlet: 1-3/4” OD
Outlet: 2-1/4” OD

Tel 1.800.774.2168
www.bgrradiator.com

BGR Part Number: BT-0128-7X
PERFEX MODEL OV-025-RE, K-75

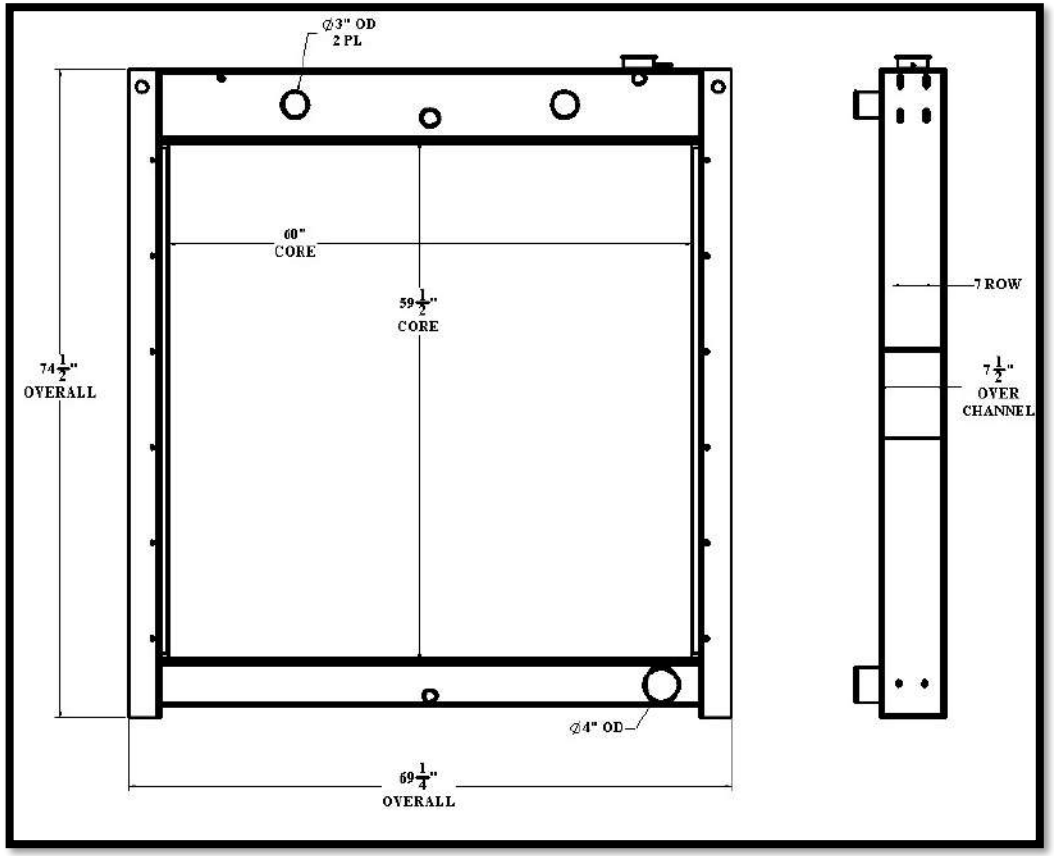

Overall Dimensions: 74-1/2” X 69-1/4” X 7-1/2”
Core: 59-1/2” X 60” X 7 ROW
Inlet: 3” OD 2PL
Outlet: 4” OD

Listed dimensions may vary slightly from OE

BGR Part Number: BT-0129-5I

ONAN 130-0836, PERFEX R-8798, YOUNG D251941

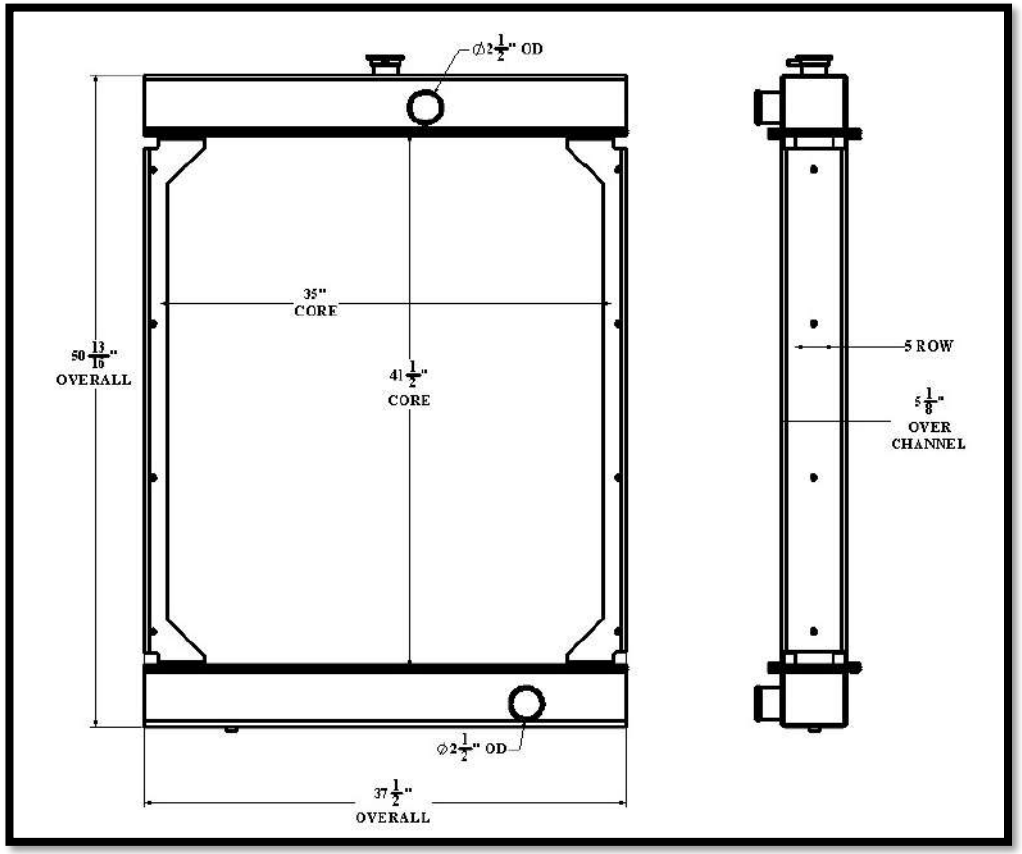

Overall Dimensions: 50-13/16” X 37-1/2” X 5-1/8”

Core: 41-1/2” X 35” X 5 ROW

Inlet: 2-1/2” OD

Outlet: 2-1/2” OD

Tel 1.800.774.2168
www.bgrradiator.com

BGR Part Number: BT-0130-8T

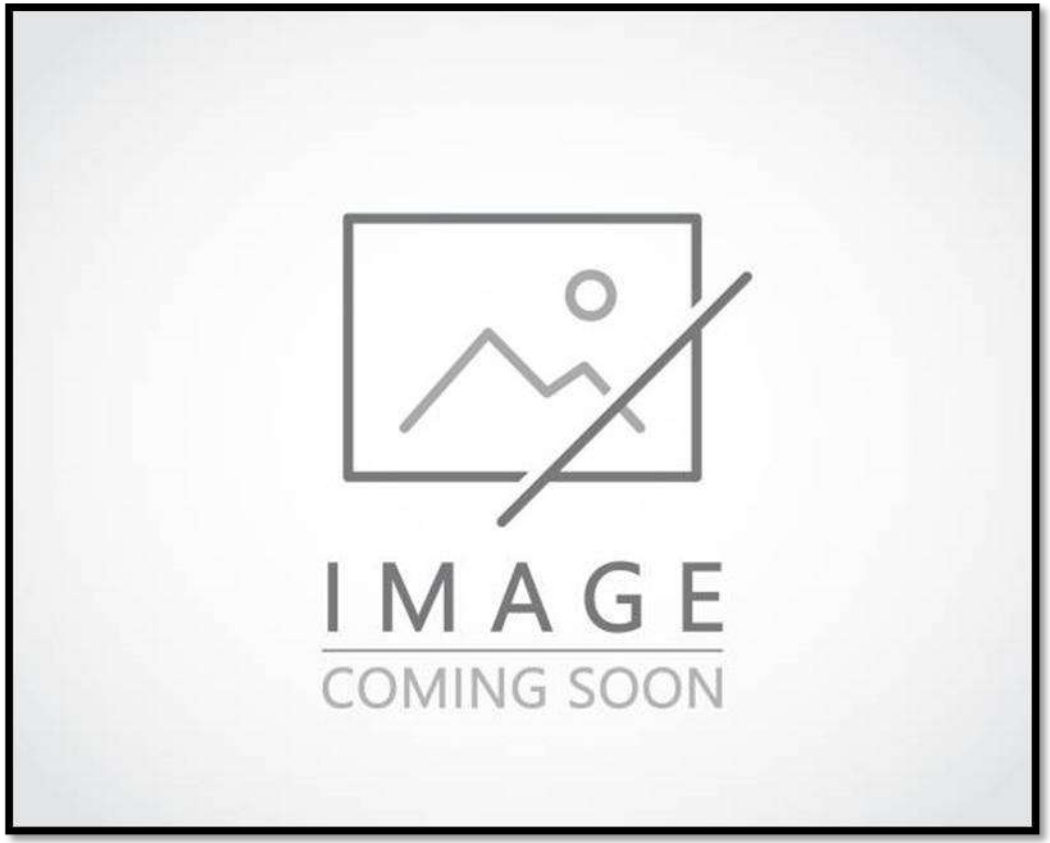

Overall Dimensions:

Core:

Inlet:

Outlet:

Listed dimensions may vary slightly from OE

BGR Part Number: BT-0131-7I

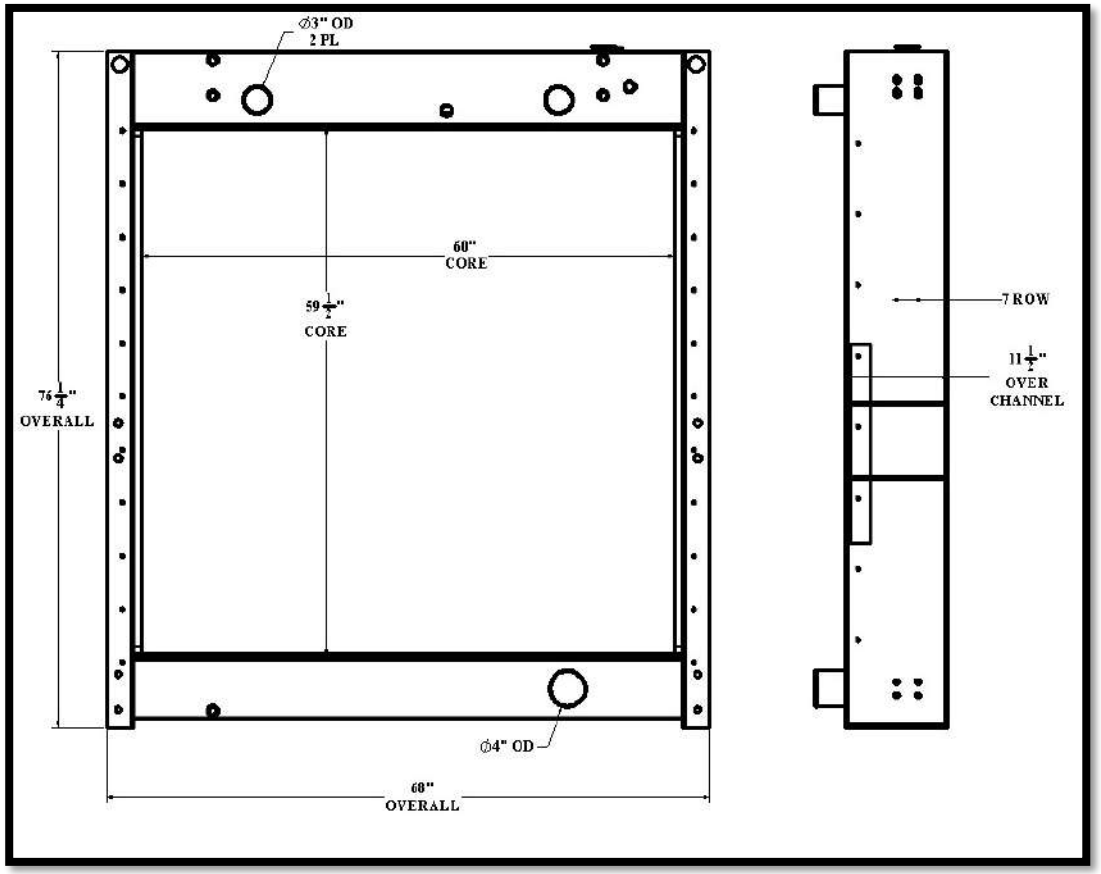

Overall Dimensions: 76-1/4” X 68” X 11-1/2”
Core: 59-1/2” X 60” X 7 ROW
Inlet: 3” OD 2 PL
Outlet: 4” OD

Tel 1.800.774.2168
www.bgrradiator.com

BGR Part Number: BT-0132-3M

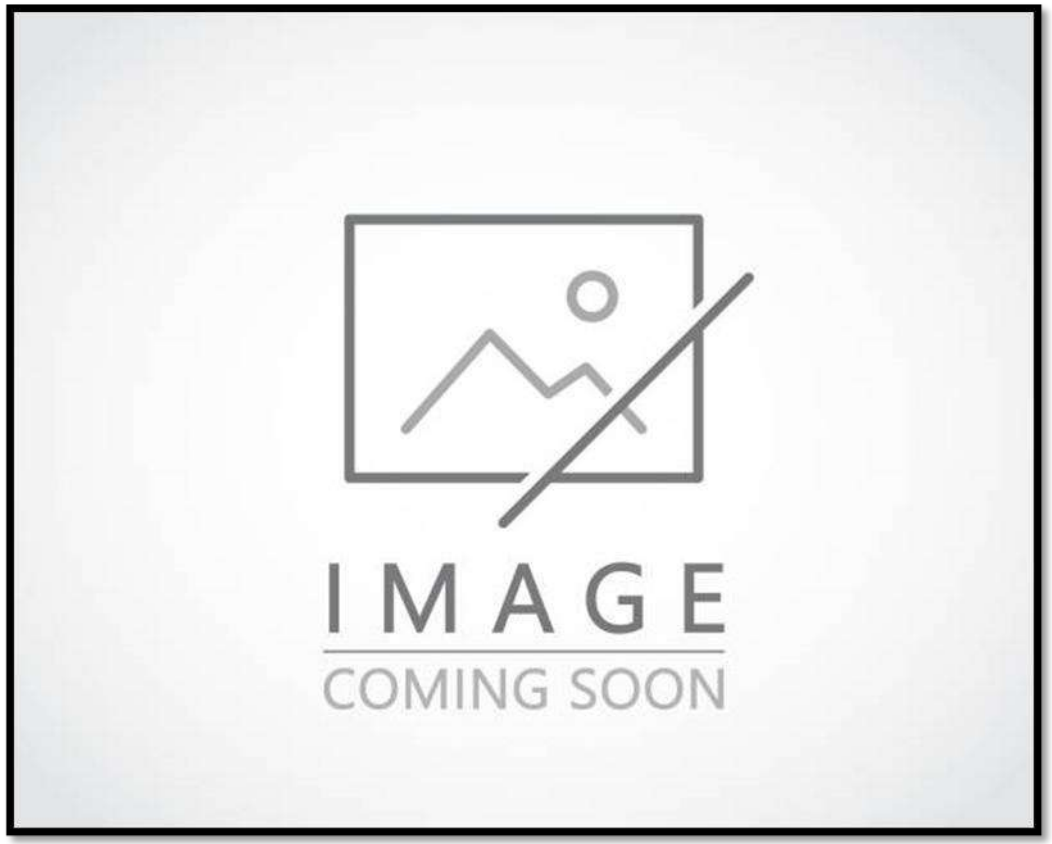

Overall Dimensions:
Core:
Inlet:
Outlet:

Listed dimensions may vary slightly from OE

BGR Part Number: BT-0133-8M
1A11487

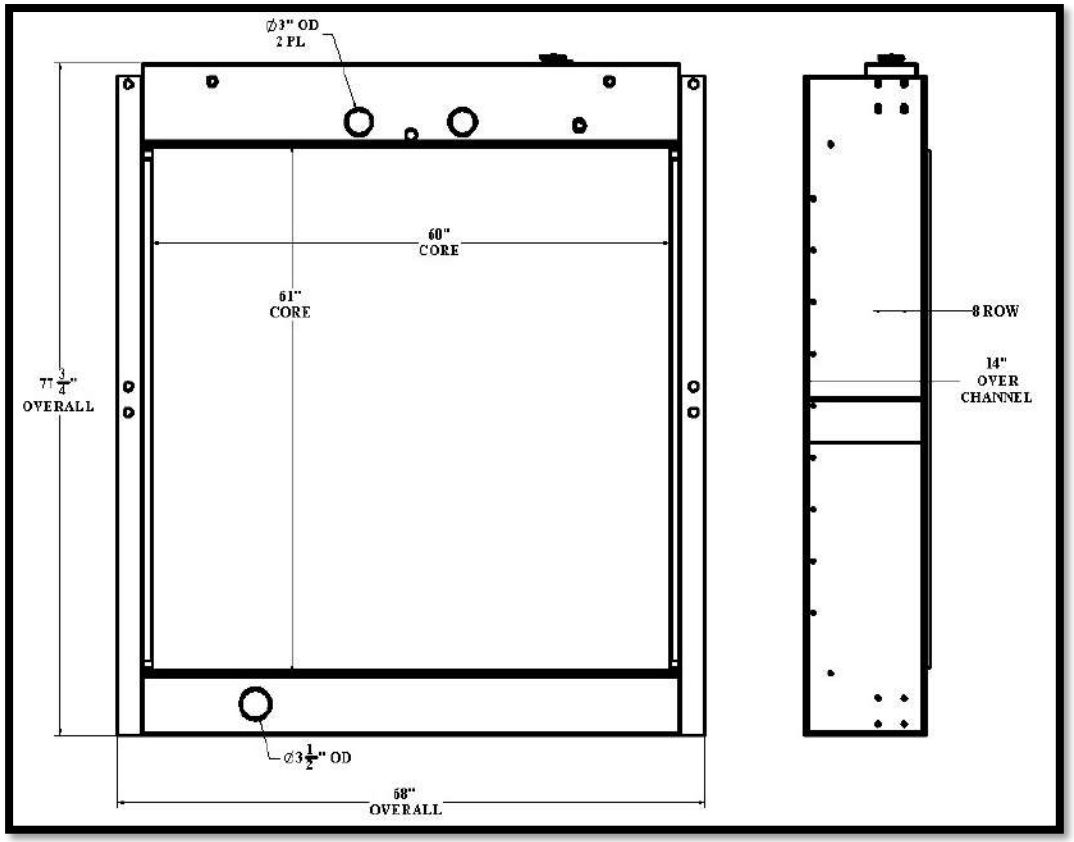

Overall Dimensions: 77-3/4” X 68” X 14”
Core: 61” X 60” X 8 ROW
Inlet: 3” OD 2 PL
Outlet: 3-1/2” OD

Tel 1.800.774.2168
www.bgrradiator.com

BGR Part Number: BT-0134-5I
M-9-EF 1A11217D

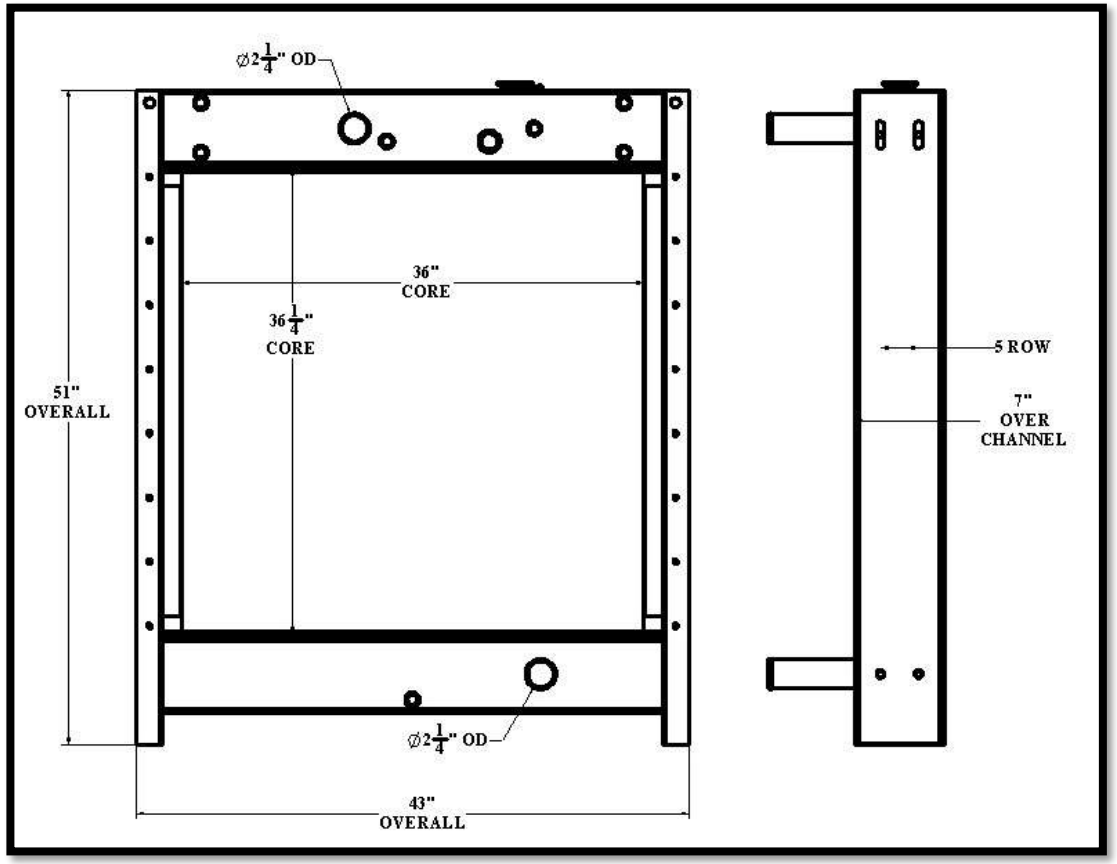

Overall Dimensions: 51” X 43” X 7”
Core: 36-1/4” X 36” X 5 ROW
Inlet: 2-1/4”
Outlet: 2-1/4”

Listed dimensions may vary slightly from OE

BGR Part Number: BT-0135-5X
PERFEX DDV 90

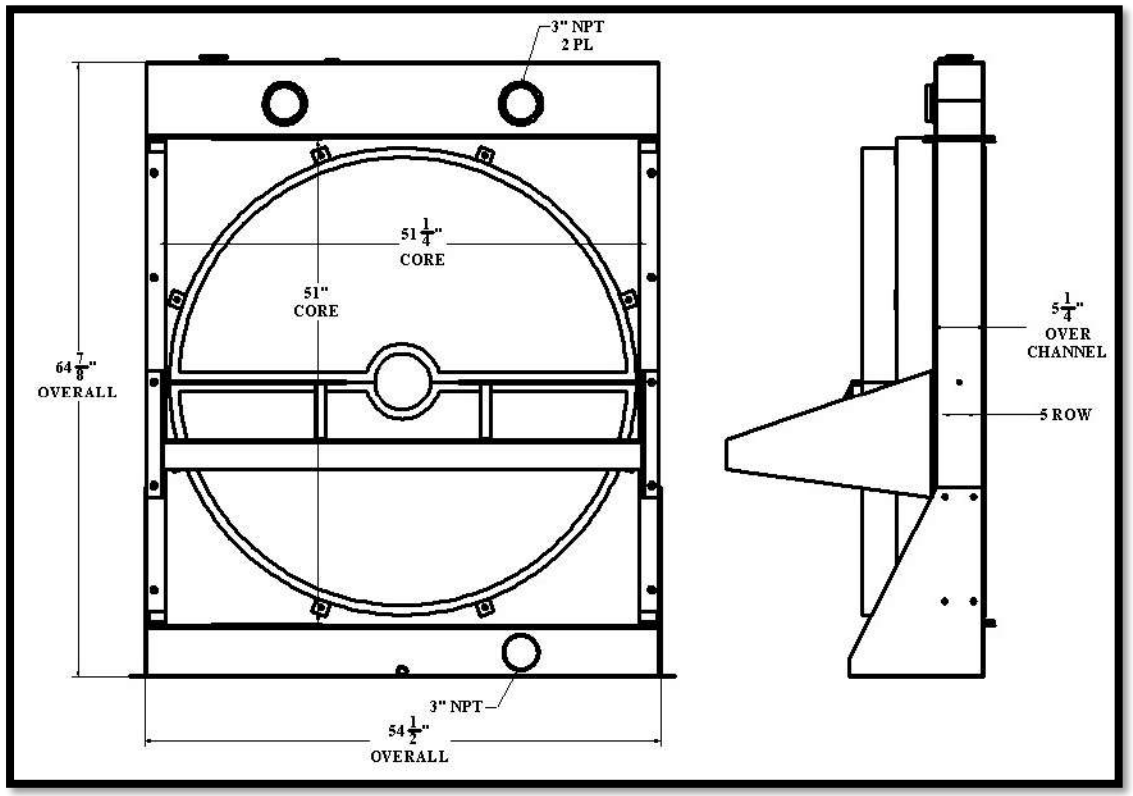

Overall Dimensions: 64-7/8” X 54-1/2” X 5-1/4”
Core: 51” X 51-1/4” X 5 ROW
Inlet: 3” NPT 2 PL
Outlet: 3 NPT

Tel 1.800.774.2168
www.bgrradiator.com

BGR Part Number: BT-0136-5I
BEARWARD 120-045

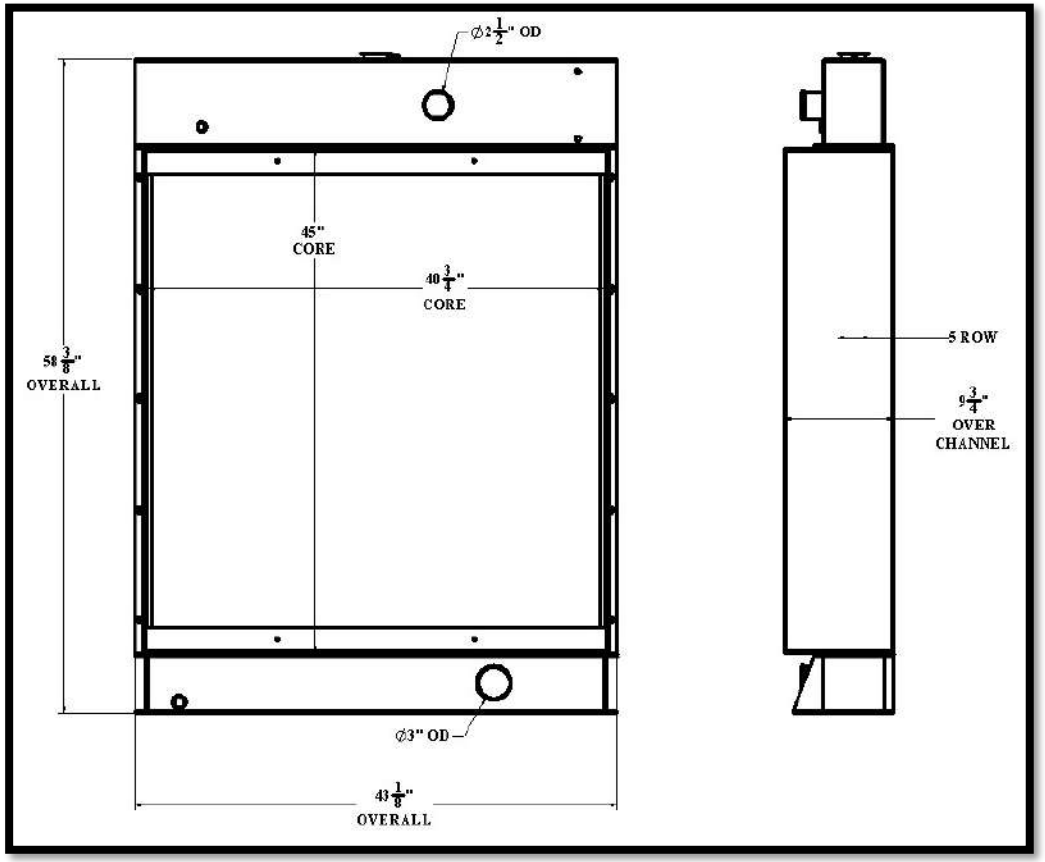

Overall Dimensions: 58-3/8” X 43-1/8” X 9-3/4”
Core: 45” X 40-3/4” X 5 ROW
Inlet: 2-1/2” OD
Outlet: 3” OD

Listed dimensions may vary slightly from OE

BGR Part Number: BT-0137-7I

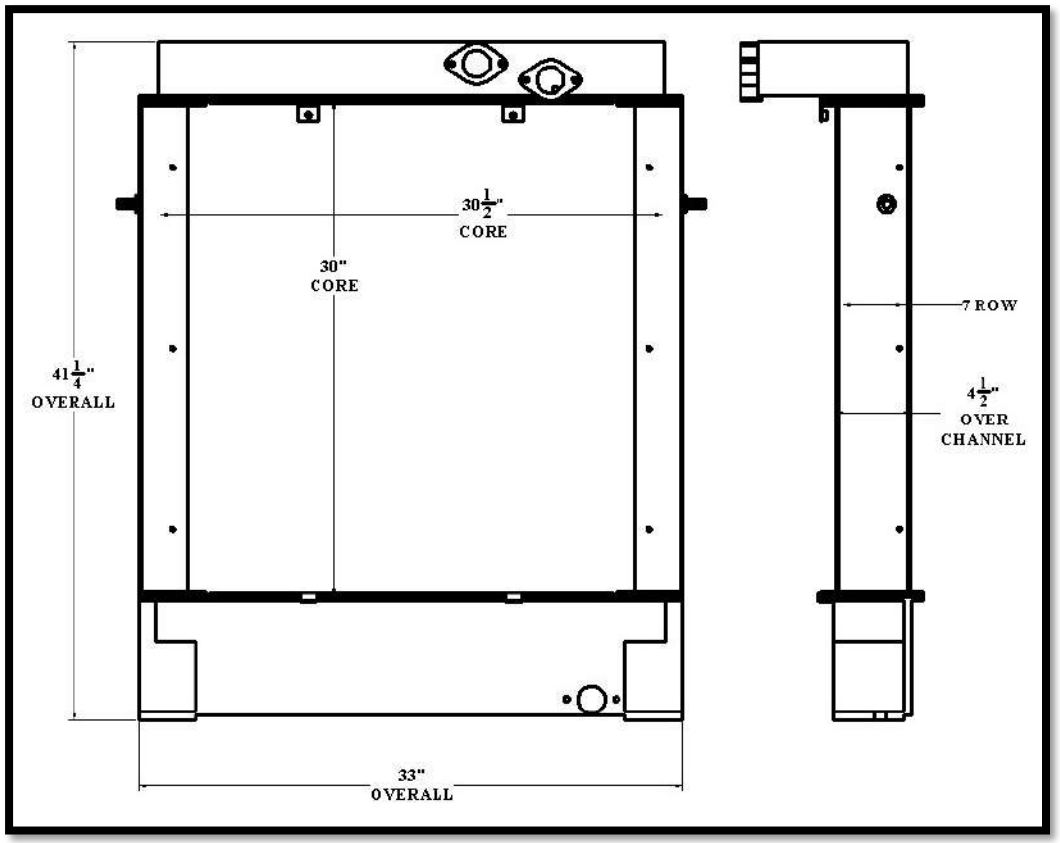

Overall Dimensions: 41-1/4” X 33” X 4-1/2”
Core: 30” X 30-1/2” X 7 ROW
Inlet: BOLTED FLANGE, 2 PL
Outlet: BOLTED FLANGE

Tel 1.800.774.2168
www.bgrradiator.com

BGR Part Number: BT-0138-3M

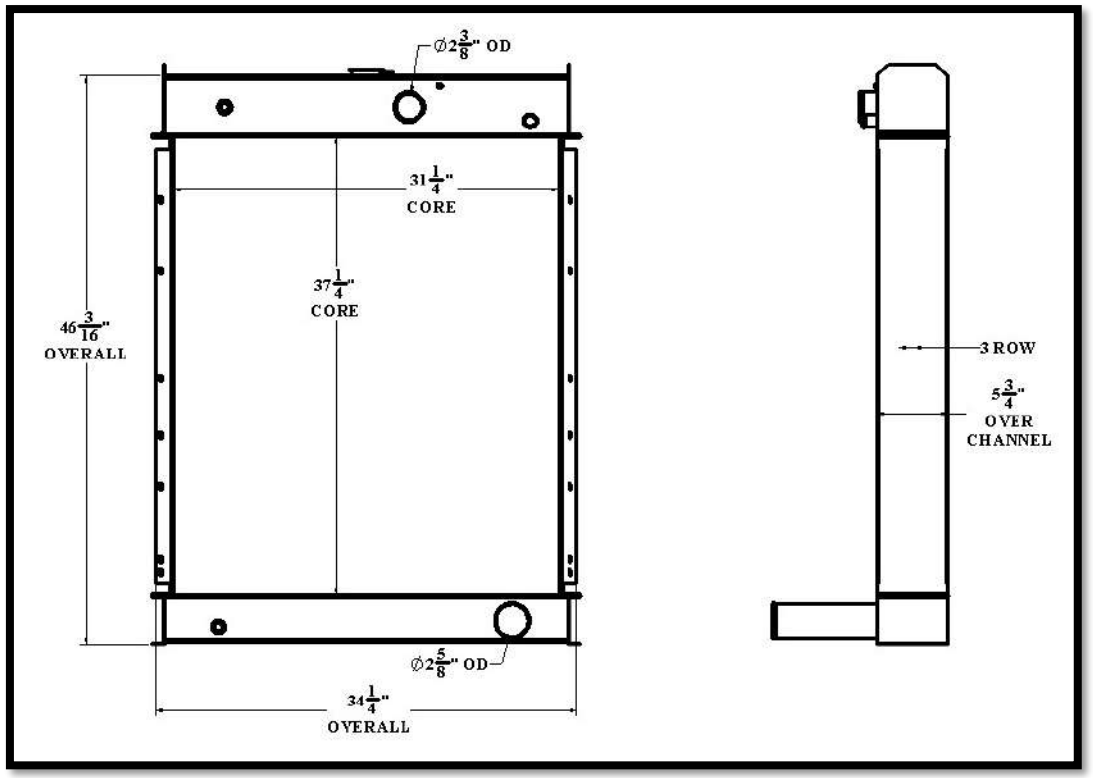

Overall Dimensions: 46-3/16” X 34-1/4” X 5-3/4”
Core: 37-1/4” X 31-1/4” X 3 ROW
Inlet: 2-3/8” OD
Outlet: 2-5/8” OD

Listed dimensions may vary slightly from OE

BGR Part Number: BT-0139-6I
DETROIT DISEL SERIES 60 (600 HP)

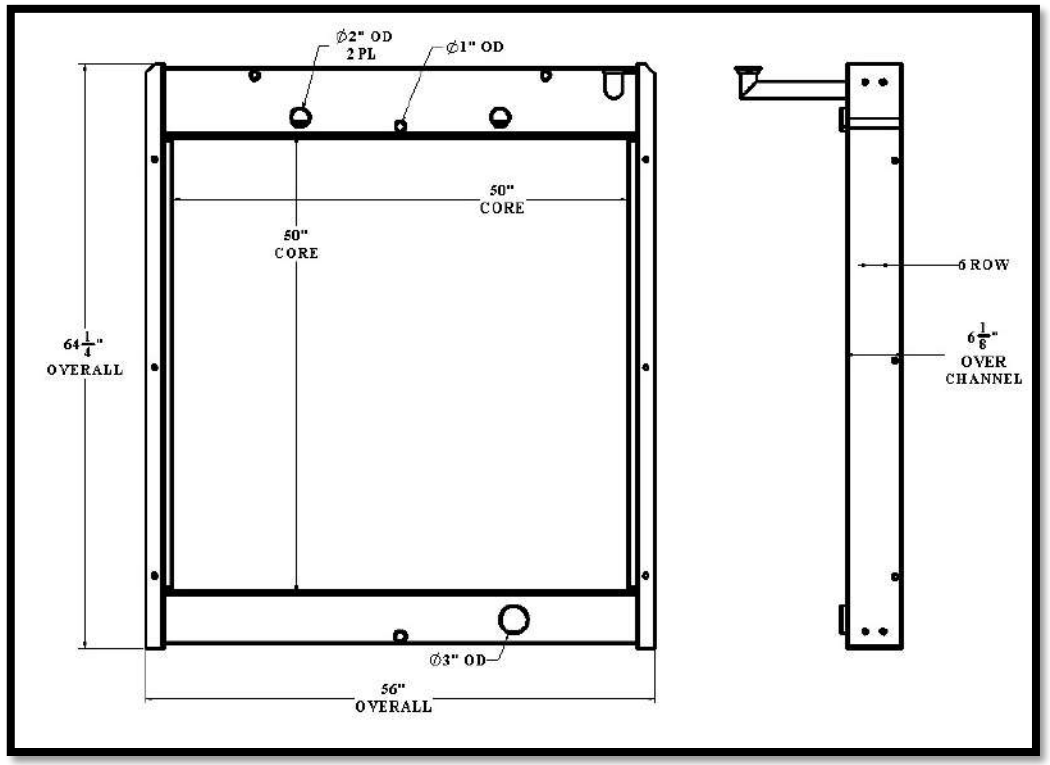

Overall Dimensions: 64-1/4” X 56” X 6-1/8”
Core: 50” X 50” X 6 ROW
Inlet: 2” OD, 2 PL
Outlet: 3” OD

Tel 1.800.774.2168
www.bgrradiator.com

BGR Part Number: BT-0140-5I

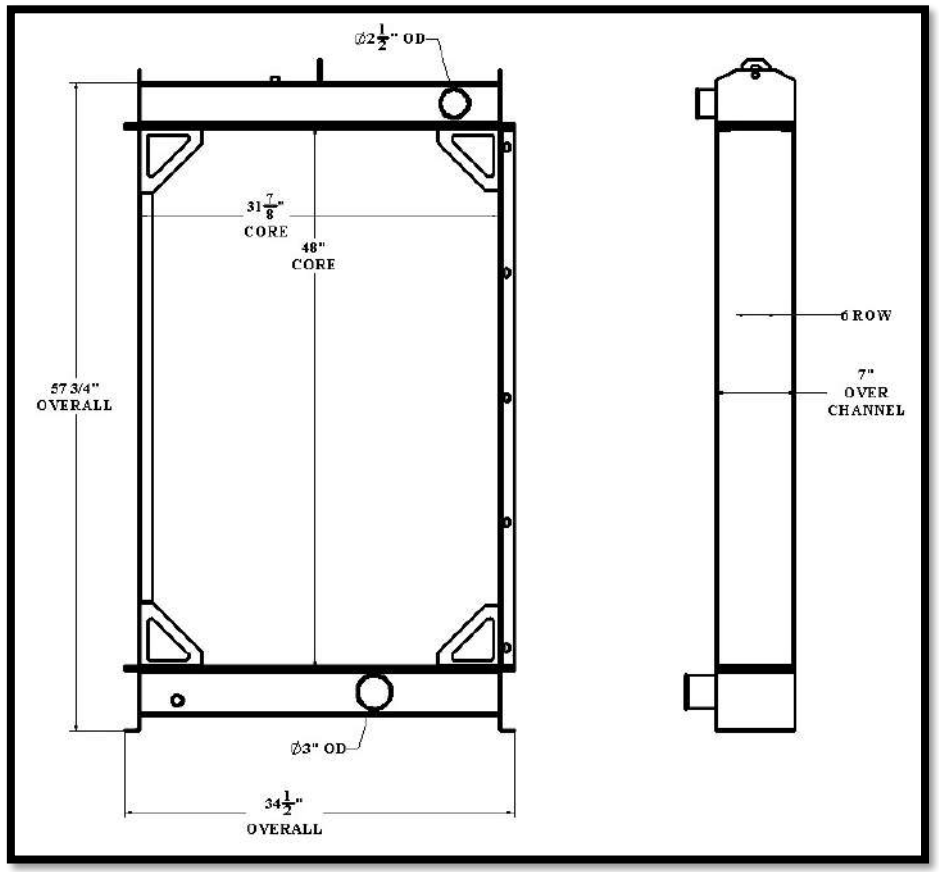

Overall Dimensions: 57-3/4” X 34-1/2” X 7”
Core: 48” X 31-7/8” X 7 ROW
Inlet: 2-1/2” OD
Outlet: 3” OD

Listed dimensions may vary slightly from OE

BGR Part Number: BT-0141-5X
V-27056

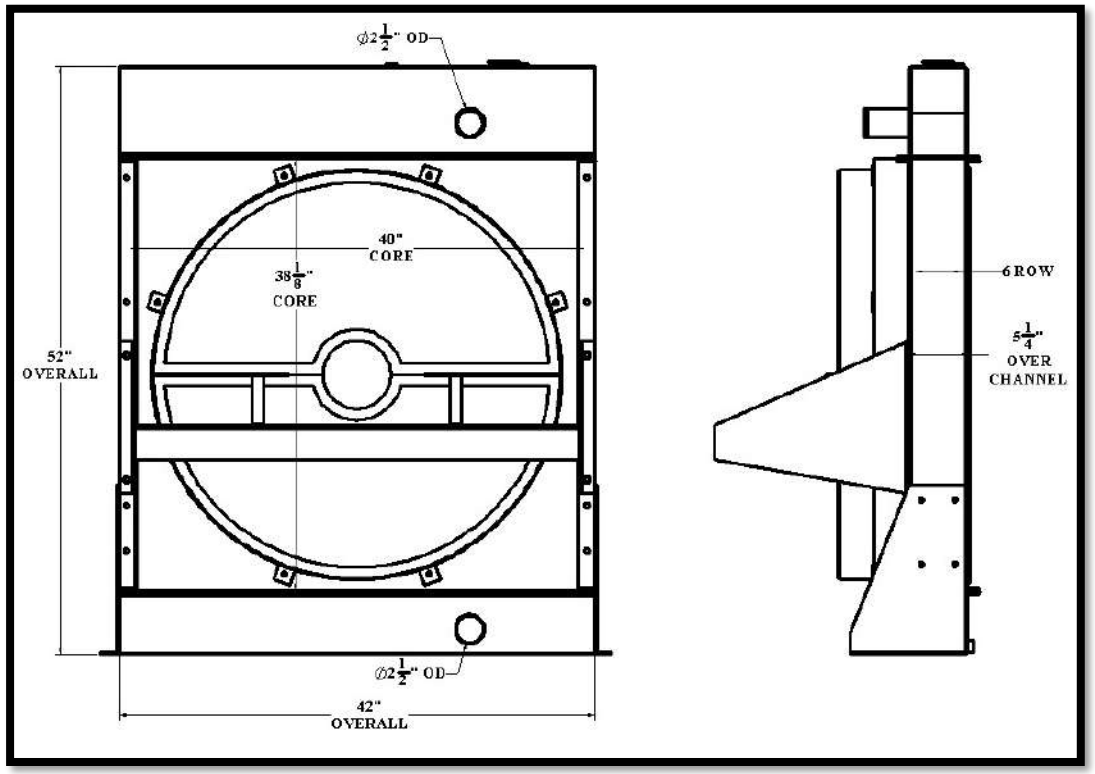

Overall Dimensions: 52” X 42” X 5-1/4”
Core: 38-1/8” X 40” X 6 ROW
Inlet: 2-1/2” OD
Outlet: 2-1/2” OD

Tel 1.800.774.2168
www.bgrradiator.com

BGR Part Number: BT-0142-6Y
10322655

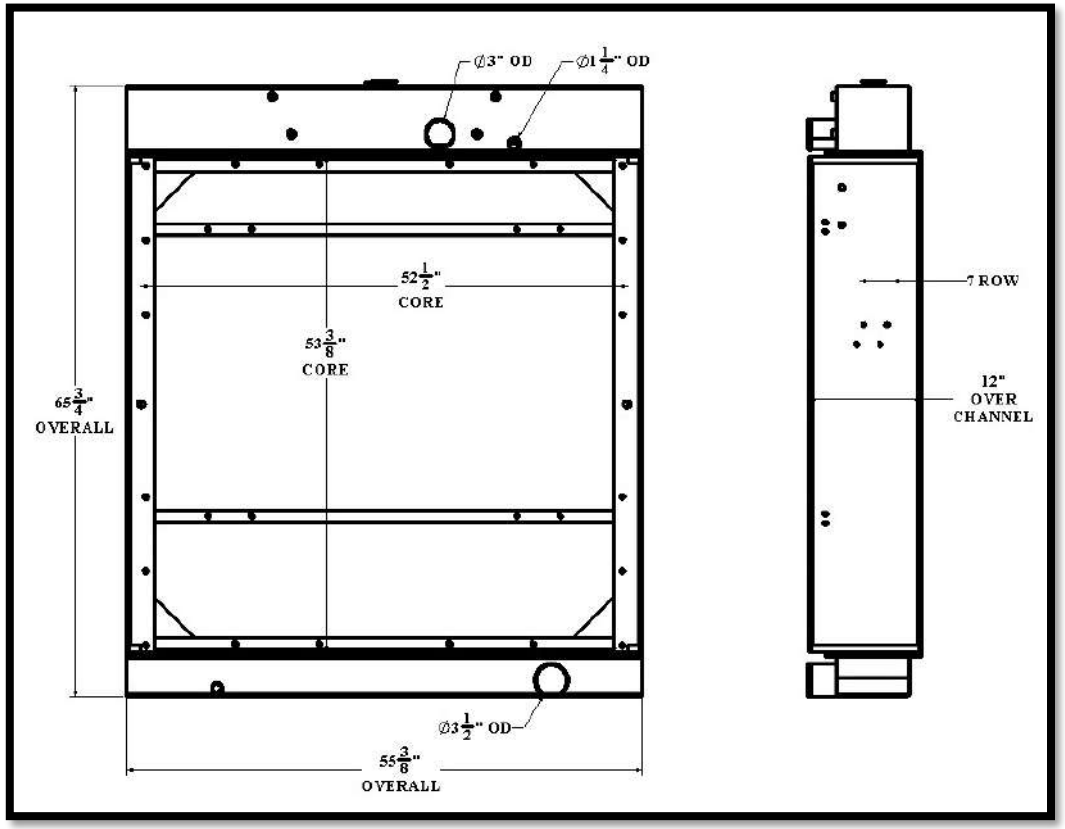

Overall Dimensions: 65-3/4” X 55-3/8” X 12”
Core: 58-3/8” X 52-1/2” X 7 ROW
Inlet: 3” OD
Outlet: 3-1/2” OD

Listed dimensions may vary slightly from OE

BGR Part Number: BT-0143-3I

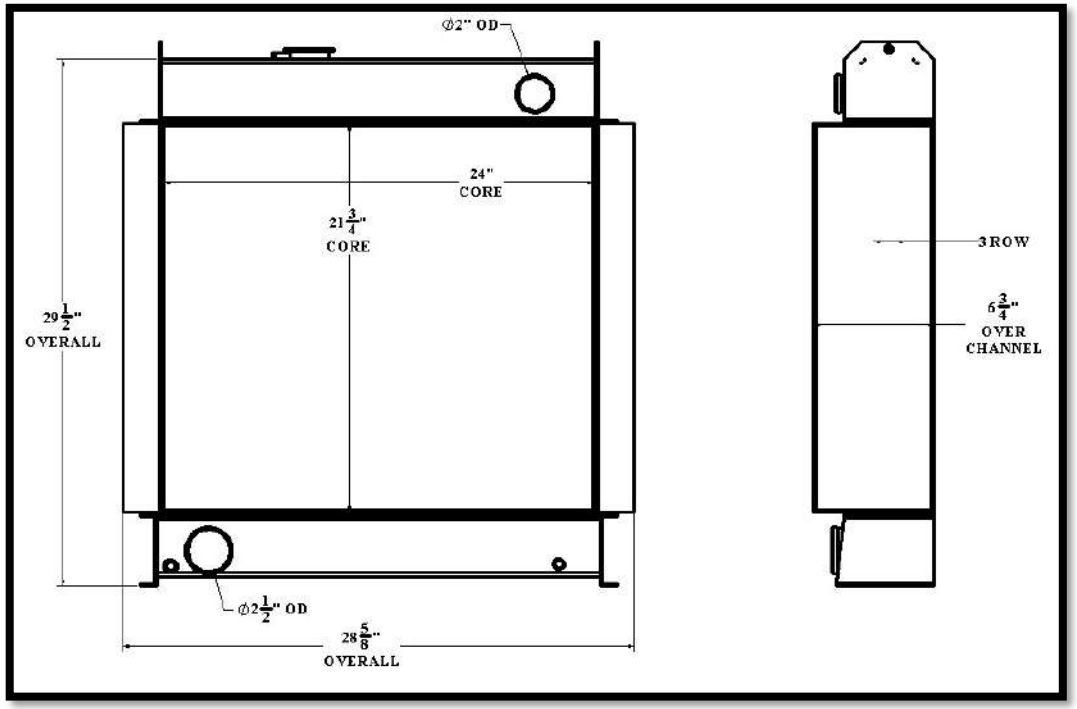

Overall Dimensions: 29-1/2” X 28-5/8” X 6-3/4”
Core: 21-3/4” X 24” X 3 ROW
Inlet: 2” OD
Outlet: 2-1/2” OD

Tel 1.800.774.2168
www.bgrradiator.com

BGR Part Number: BT-0144-8I

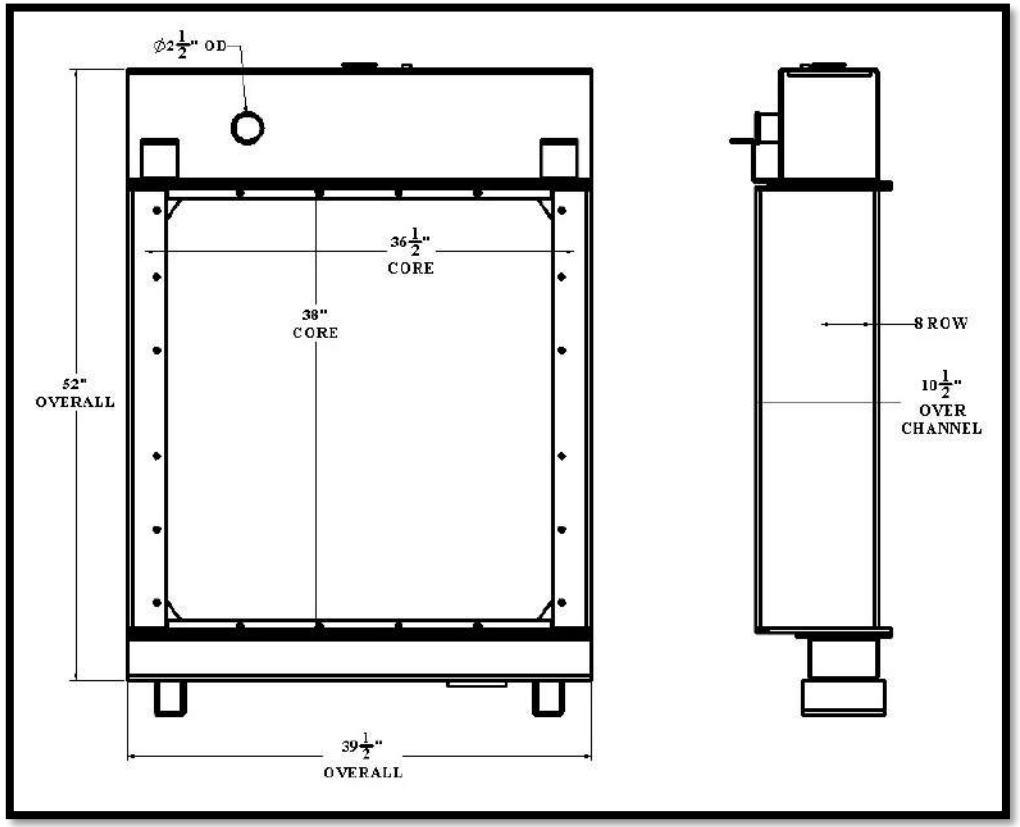

Overall Dimensions: 52” X 39-1/2” X 10-1/2”
Core: 38” X 36-1/2” X 8 ROW
Inlet: 2-1/2” OD
Outlet: BOLTED FLANGE

Listed dimensions may vary slightly from OE

BGR Part Number: BT-0145-3I

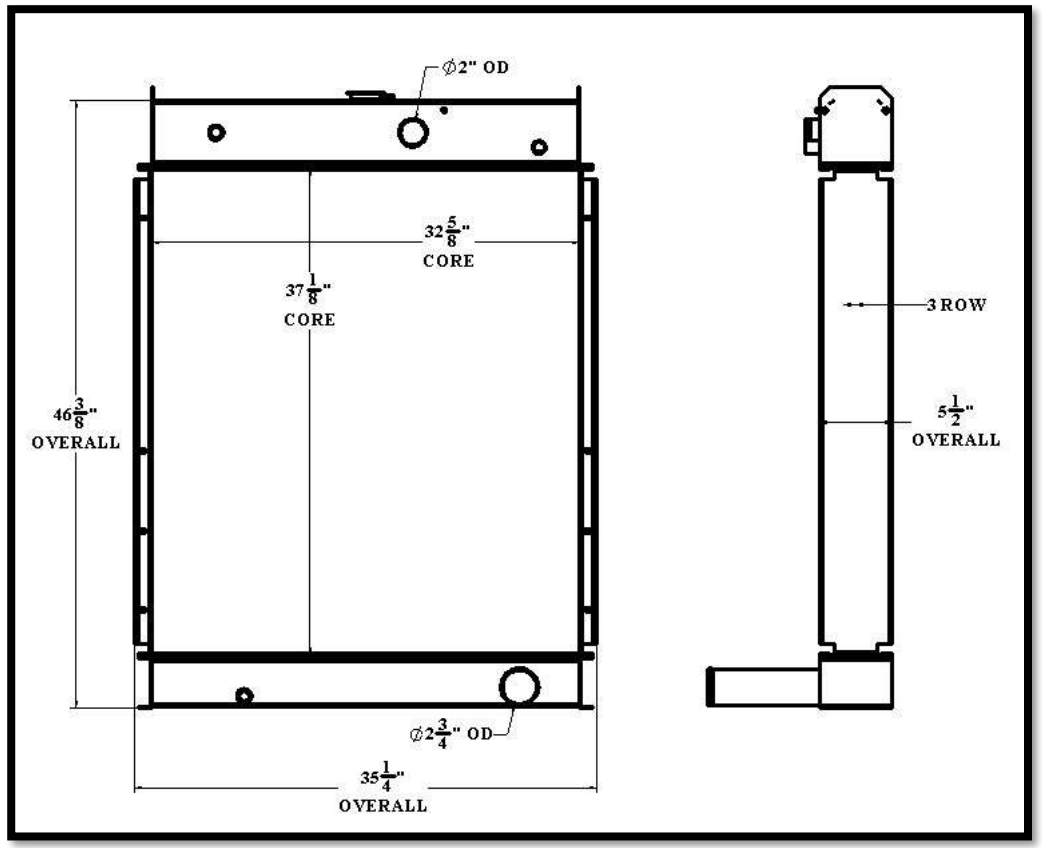

Overall Dimensions: 46-3/8” X 35-1/4” X 5-1/2”
Core: 37-1/8” X 32-5/8” X 3 ROW
Inlet: 2” OD
Outlet: 2-3/4” OD

Tel 1.800.774.2168
www.bgrradiator.com

BGR Part Number: BT-0146-6I

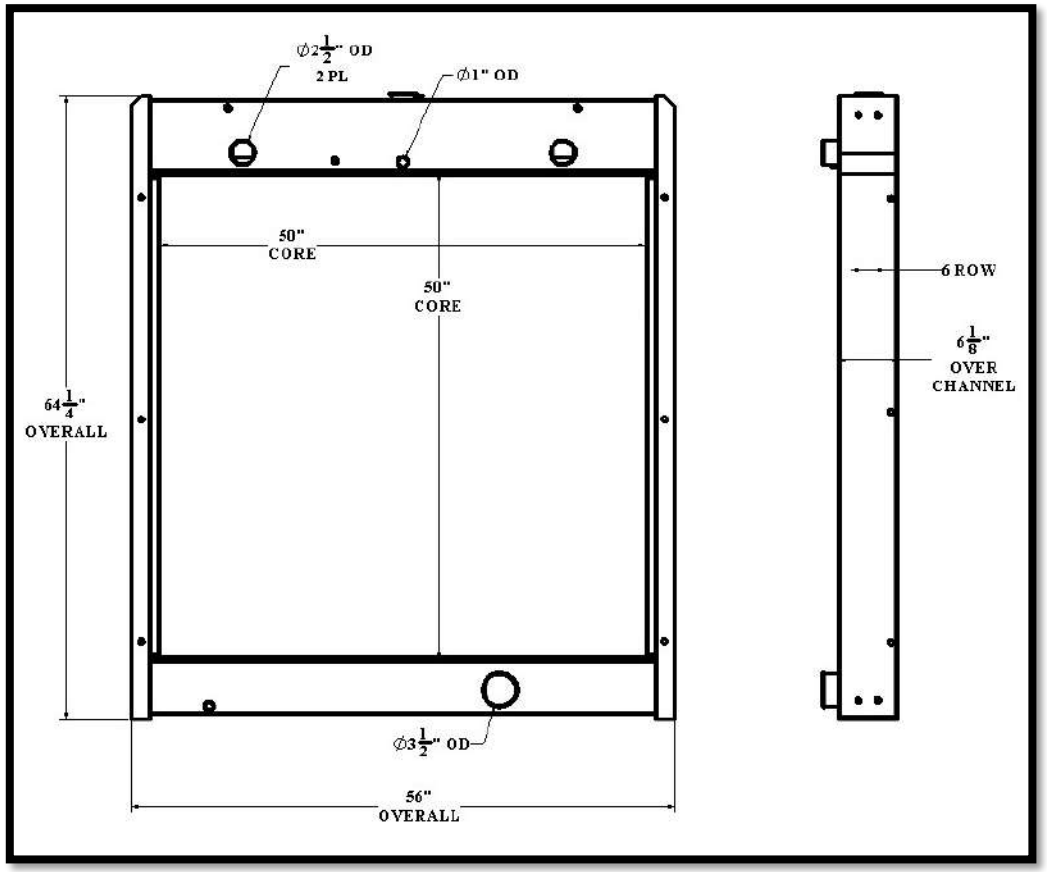

Overall Dimensions: 64-1/4” X 56” X 6-1/8”
Core: 50” X 50” X 6 ROW
Inlet: 2-1/2” OD, 2 PL
Outlet: 3-1/2” OD

Listed dimensions may vary slightly from OE

BGR Part Number: BT-0147-8I

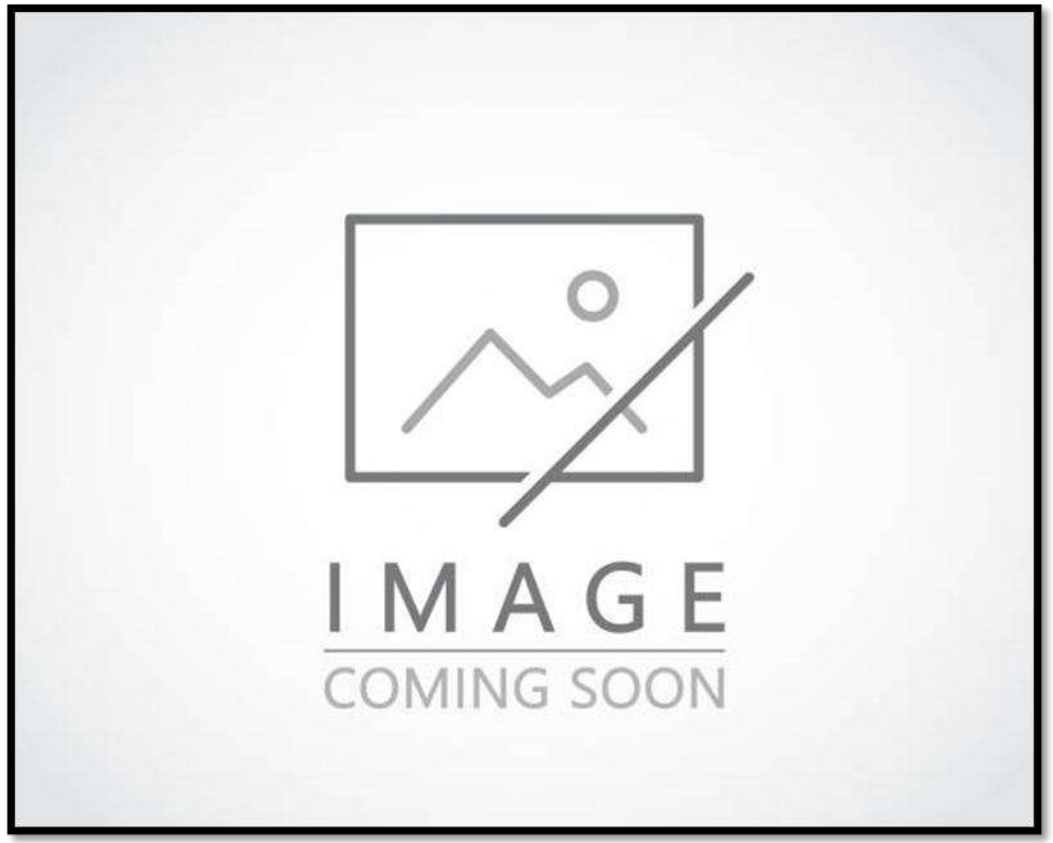

Overall Dimensions:
Core:
Inlet:
Outlet:

Tel 1.800.774.2168
www.bgrradiator.com

BGR Part Number: BT-0148-4I
BEARWARD 564600001

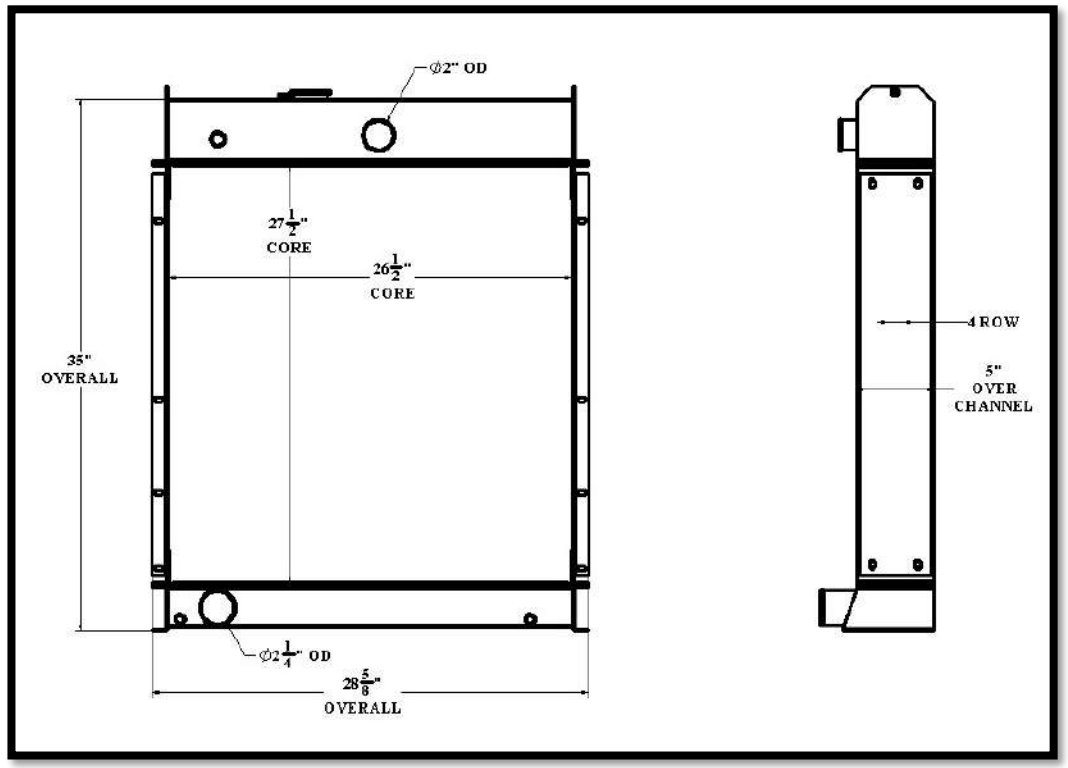

Overall Dimensions: 35” X 28-5/8” X 5”
Core: 27-1/2” X 26-1/2” X 4 ROW
Inlet: 2” OD
Outlet: 2-1/4” OD

Listed dimensions may vary slightly from OE

BGR Part Number: BT-0149-7I
MODINE SP04966

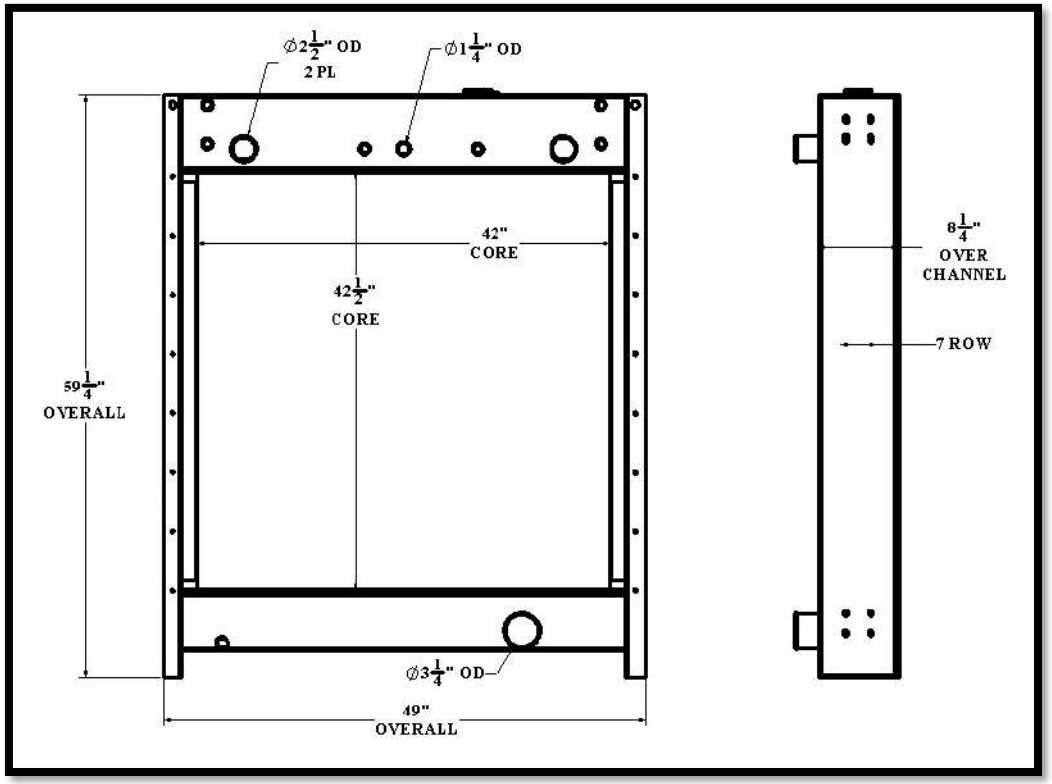

Overall Dimensions: 59-1/4” X 49” X 8-1/4”
Core: 42-1/2” X 42” X 7 ROW
Inlet: 2-1/2” OD, 2 PL
Outlet: 3-1/4” OD

Tel 1.800.774.2168
www.bgrradiator.com

BGR Part Number: BT-0150-7X

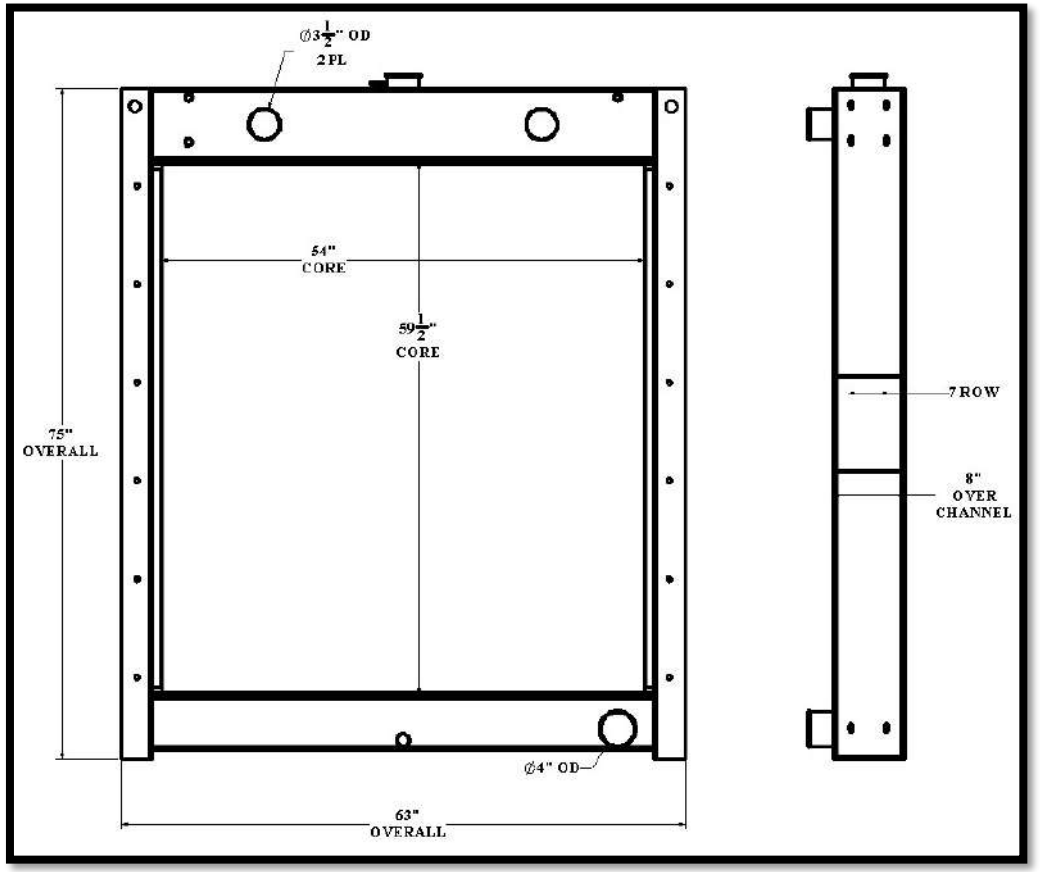

Overall Dimensions: 75” X 63” X 8”
Core: 59-1/2” X 54” X 7 ROW
Inlet: 3-1/2” OD, 2 PL
Outlet: 4” OD

Listed dimensions may vary slightly from OE

BGR Part Number: BT-0151-5I
130-5444

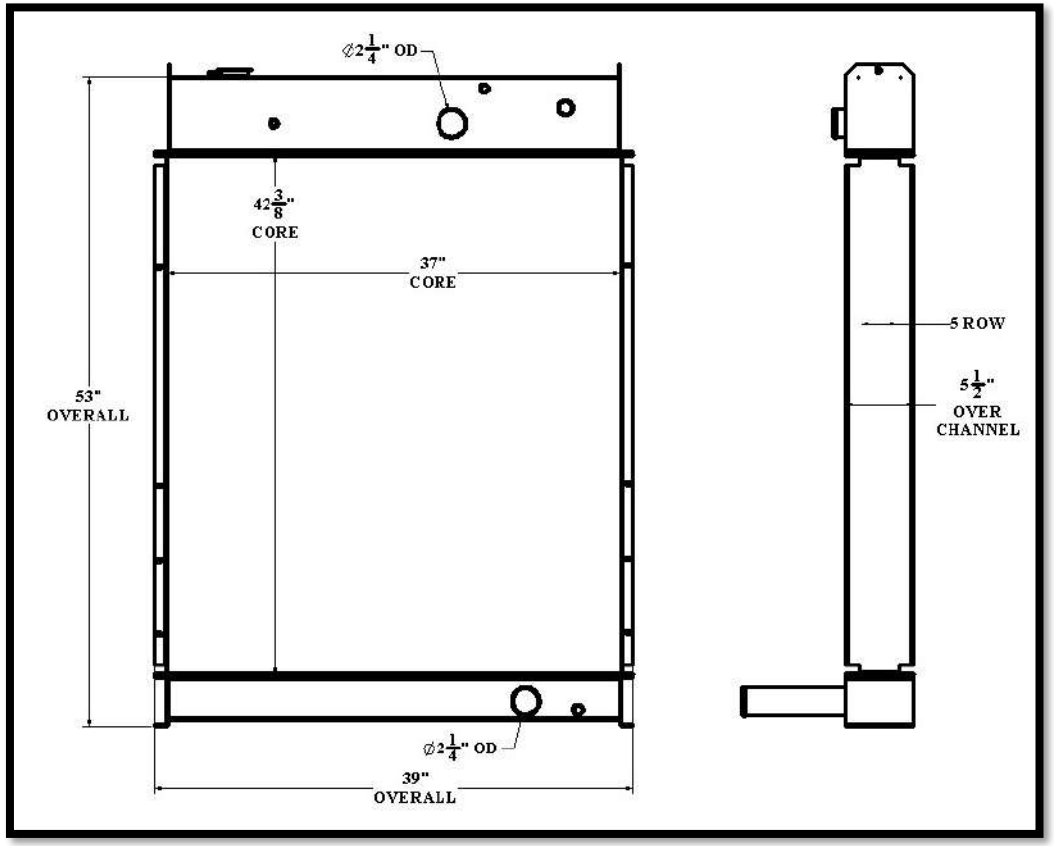

Overall Dimensions: 53” X 39” X 5-1/2”
Core: 42-3/8” X 37” X 5 ROW
Inlet: 2-1/4” OD
Outlet: 2-1/4” OD

Tel 1.800.774.2168
www.bgrradiator.com

BGR Part Number: BT-0152-5Z
PERFEX 0V-09-RB SN 2868

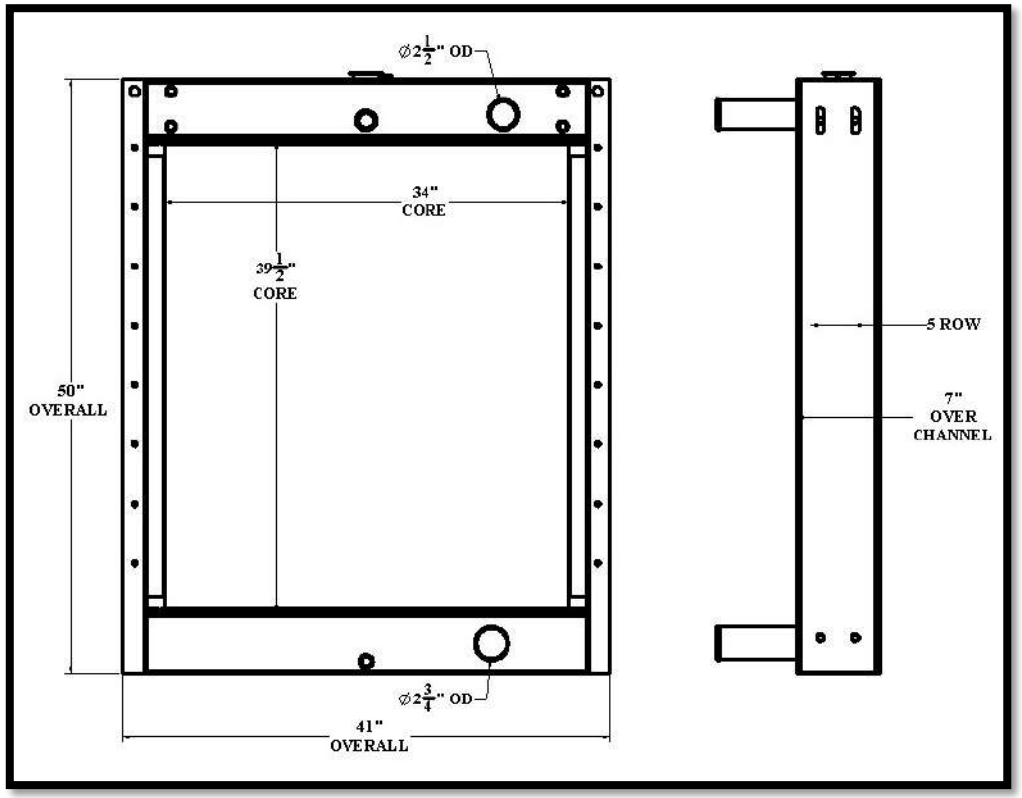

Overall Dimensions: 50” X 41” X 7”
Core: 39-1/2” X 34” X 5 ROW
Inlet: 2-1/2” OD
Outlet: 2-3/4” OD

Listed dimensions may vary slightly from OE

BGR Part Number: BT-0153-5Z
167450A

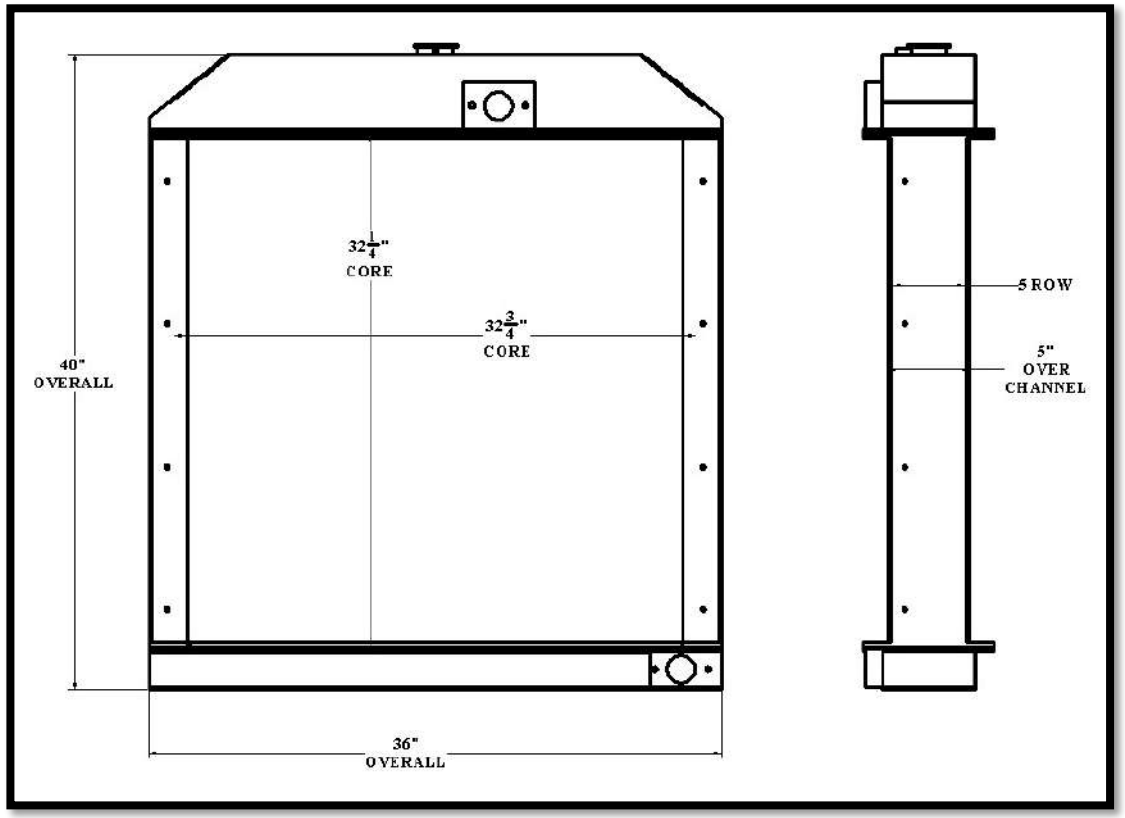

Overall Dimensions: 40” X 36” X 5”
Core: 32-1/4” X 32-3/4” X 5 ROW
Inlet: BOLTED FLANGE
Outlet: BOLTED FLANGE

Tel 1.800.774.2168
www.bgrradiator.com

BGR Part Number: BT-0154-7I

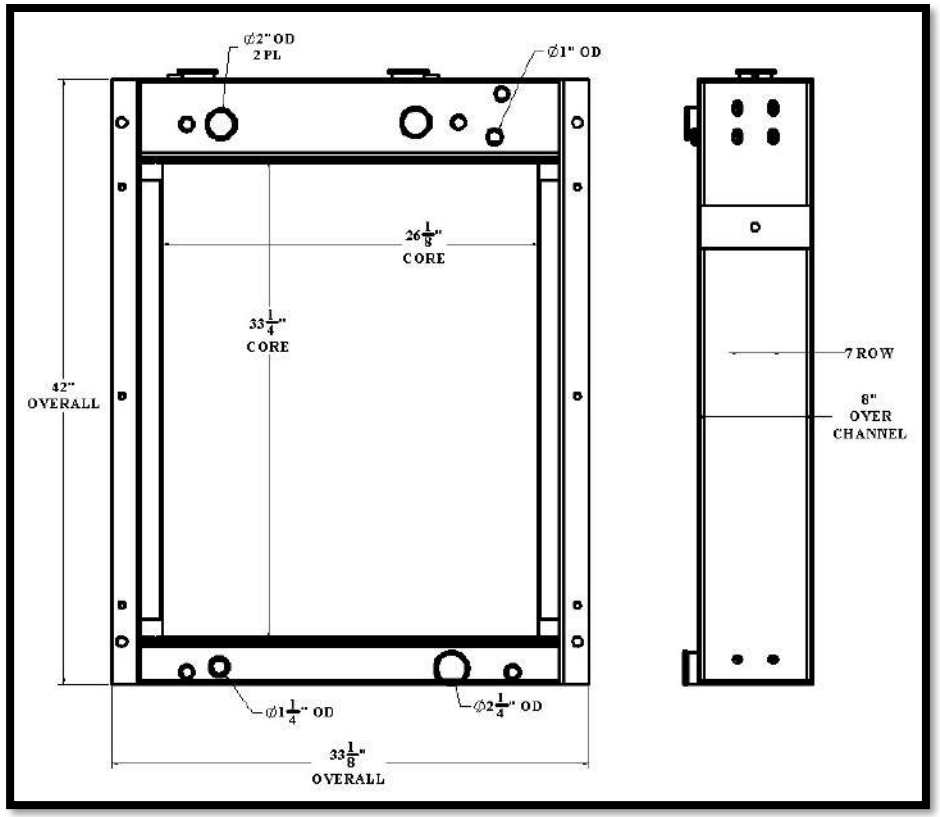

Overall Dimensions: 42” X 33-1/8” X 8”
Core: 33-1/4” X 26-1/8” X 7 ROW
Inlet: 2” OD
Outlet: 2-1/4” OD

Listed dimensions may vary slightly from OE

BGR Part Number: BT-0155-7I

CAT D349

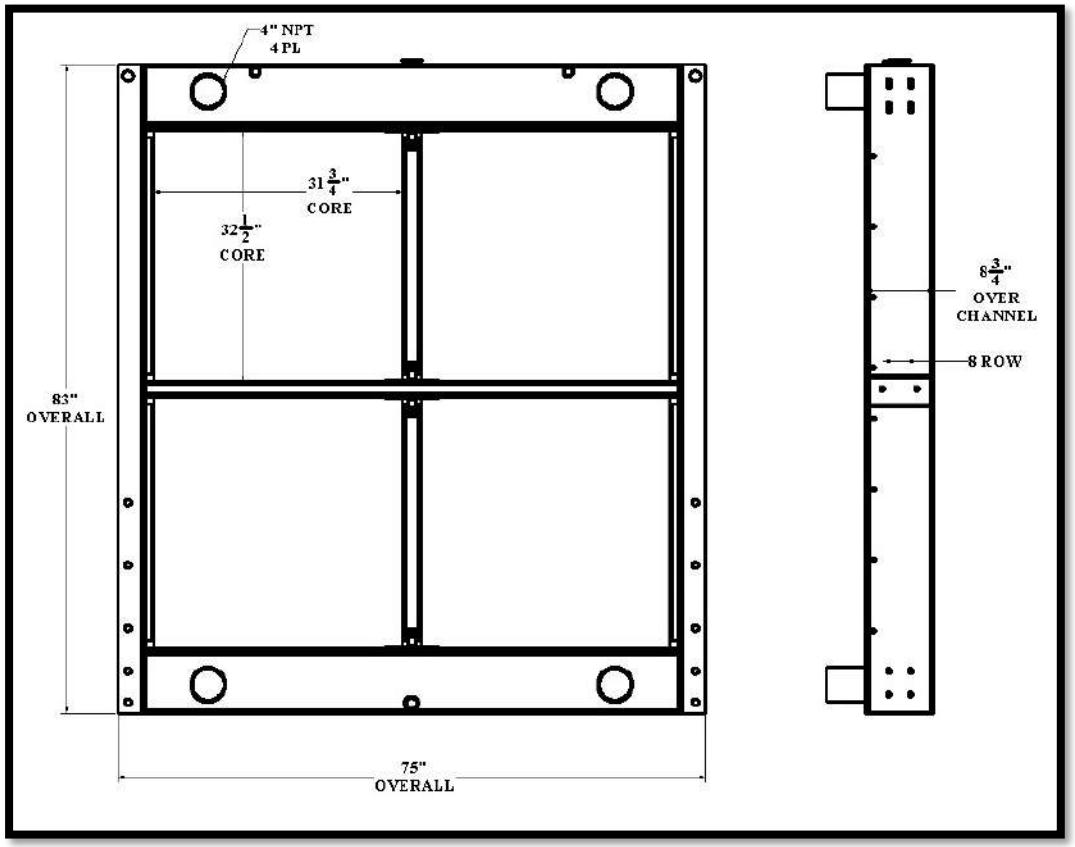

Overall Dimensions: 83” X 75” X 8-3/4”

Core: 32-1/2” X 31-3/4” X 8 ROW

Inlet: 4” NPT, 2 PL

Outlet: 4” NPT, 2 PL

Tel 1.800.774.2168

www.bgrradiator.com

BGR Part Number: BT-0156-7I7I

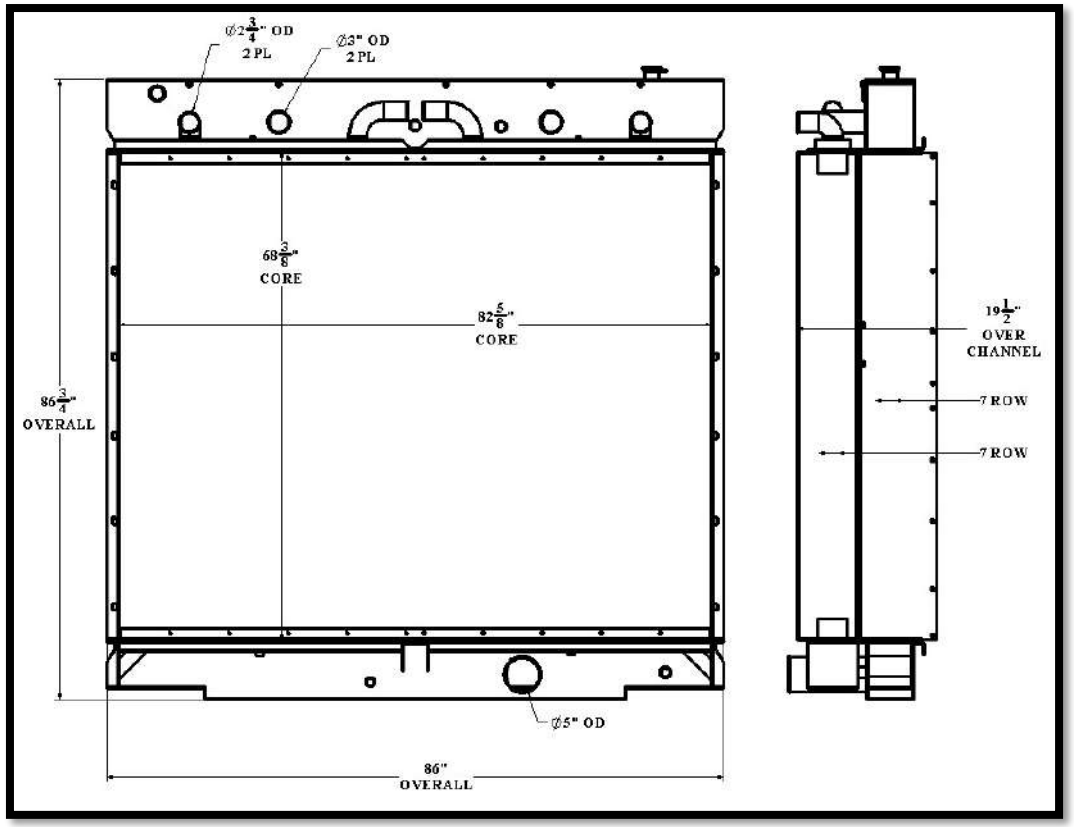

Overall Dimensions: 86-3/4” X 86” X 19-1/2”

JW & AC Core: 68-3/8” X 82-5/8” X 8 ROW

AC Inlet: 2-3/4” OD

AC Outlet: 2-3/4” OD

JW Inlet: 3” OD, 2 PL

JW Outlet: 5” OD

Listed dimensions may vary slightly from OE

BGR Part Number: BT-0157-6I

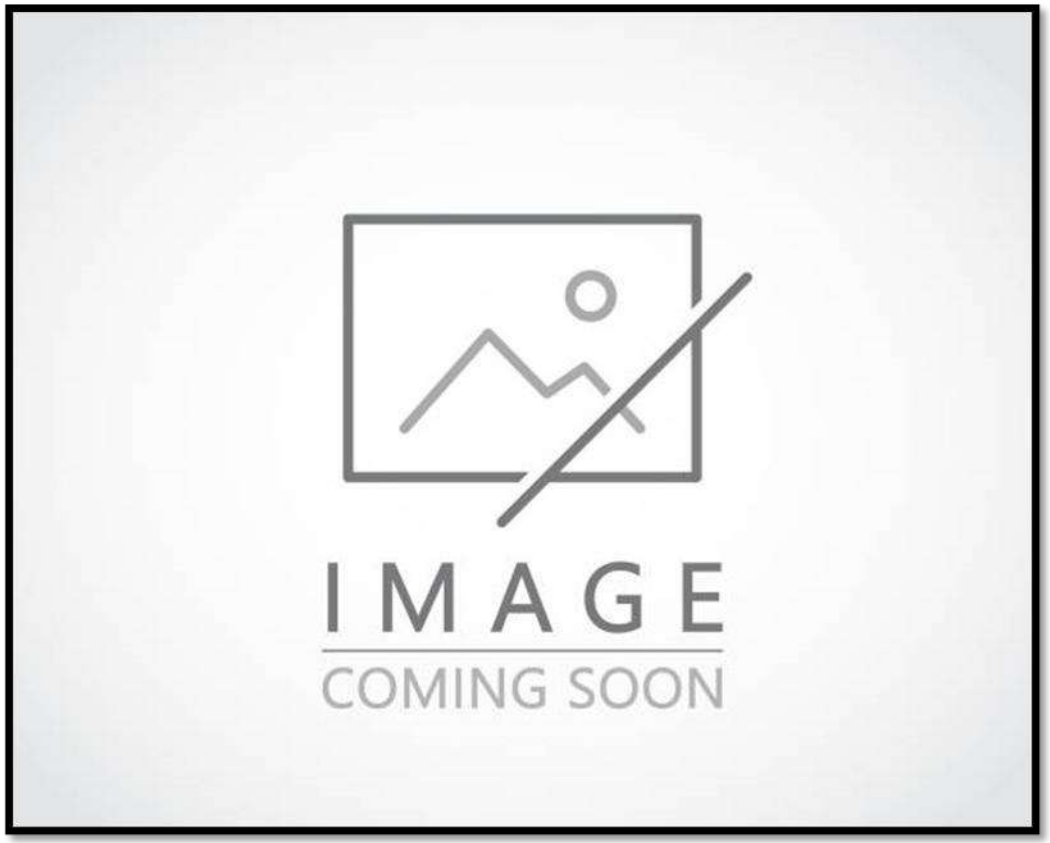

Overall Dimensions:
Core:
Inlet:
Outlet:

Tel 1.800.774.2168
www.bgrradiator.com

BGR Part Number: BT-0158-6I

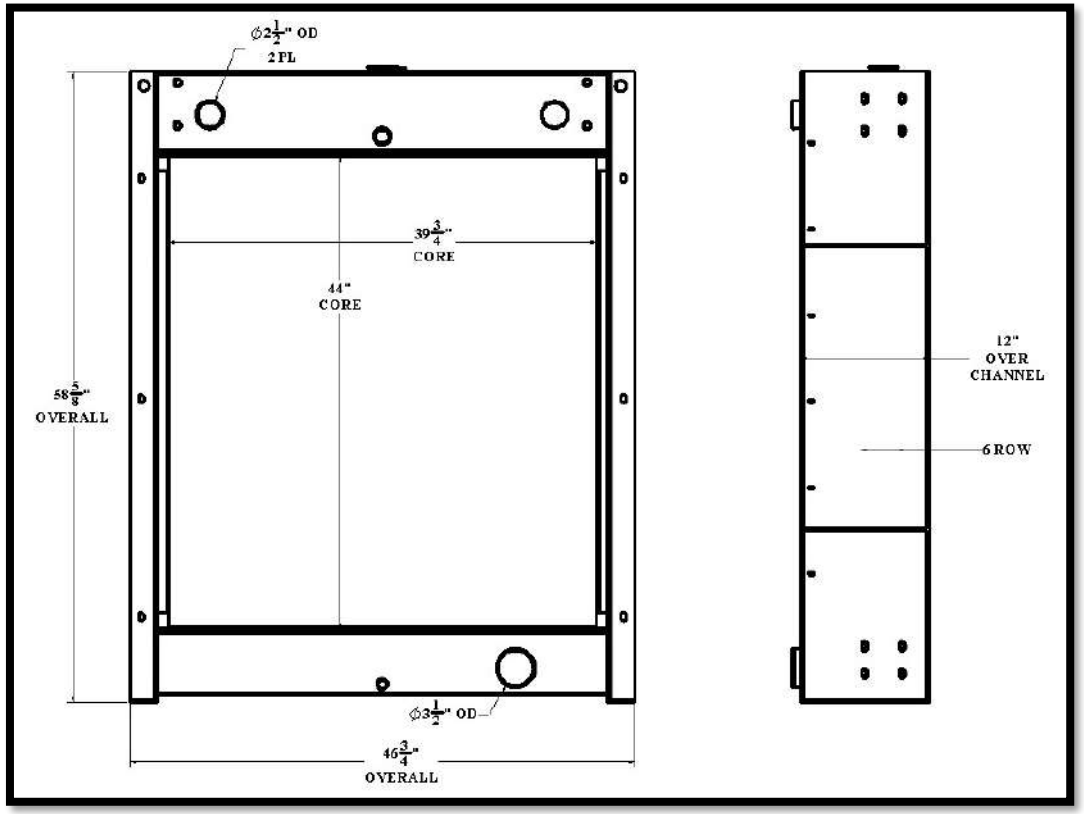

Overall Dimensions: 58-5/8” X 46-3/4” X 12”
Core: 44” X 39-3/4” X 6 ROW
Inlet: 2-1/2” OD, 2 PL
Outlet: 3-1/2” OD

Listed dimensions may vary slightly from OE

BGR Part Number: BT-0159-5I
99000672, 69000672, A029B173

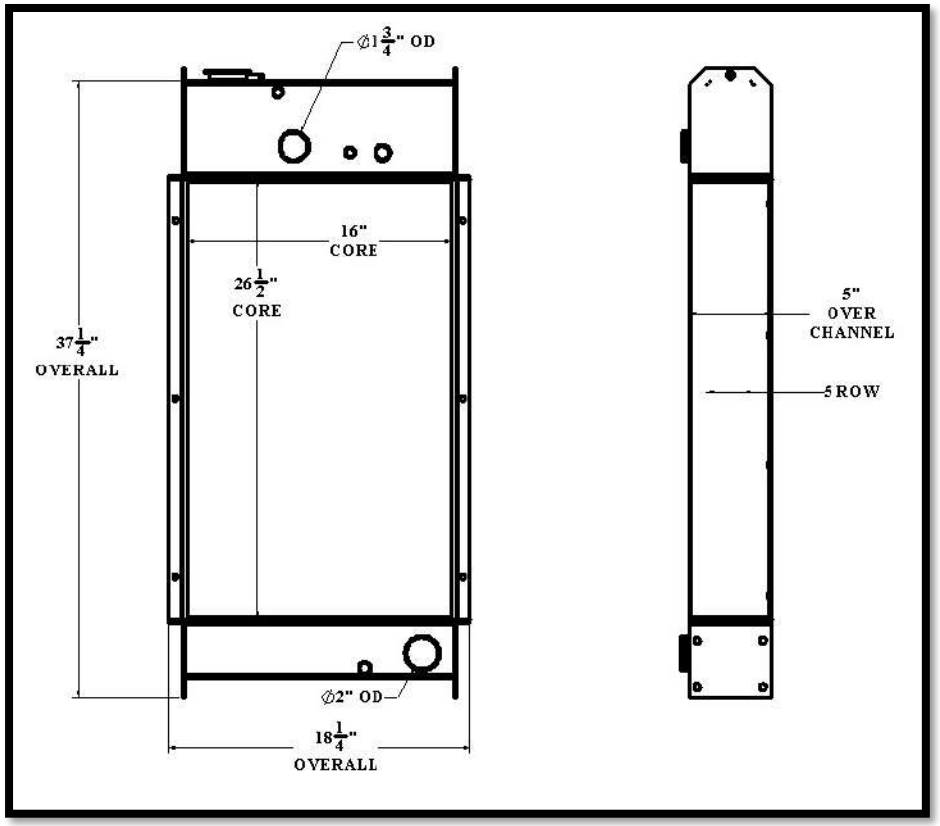

Overall Dimensions: 37-1/4” X 18-1/4” X 5”
Core: 26-1/2” X 16” X 5 ROW
Inlet: 1-3/4” OD
Outlet: 2” OD

Tel 1.800.774.2168
www.bgrradiator.com

BGR Part Number: BT-0160-5I
M-9-EF

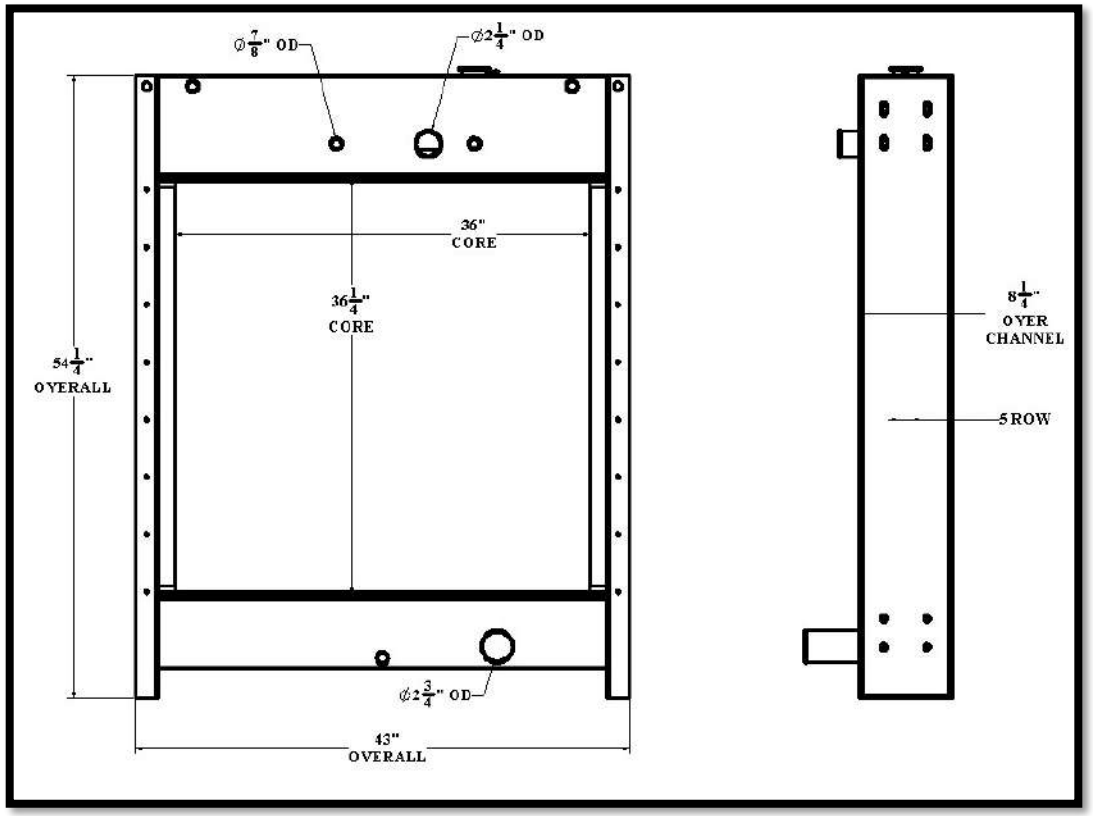

Overall Dimensions: 54-1/4” X 43” X 8-1/4”
Core: 36-1/4” X 36” X 5 ROW
Inlet: 2-1/4” OD
Outlet: 2-3/4” OD

BT159

Listed dimensions may vary slightly from OE

BT160

BGR Part Number: BT-0161-6I

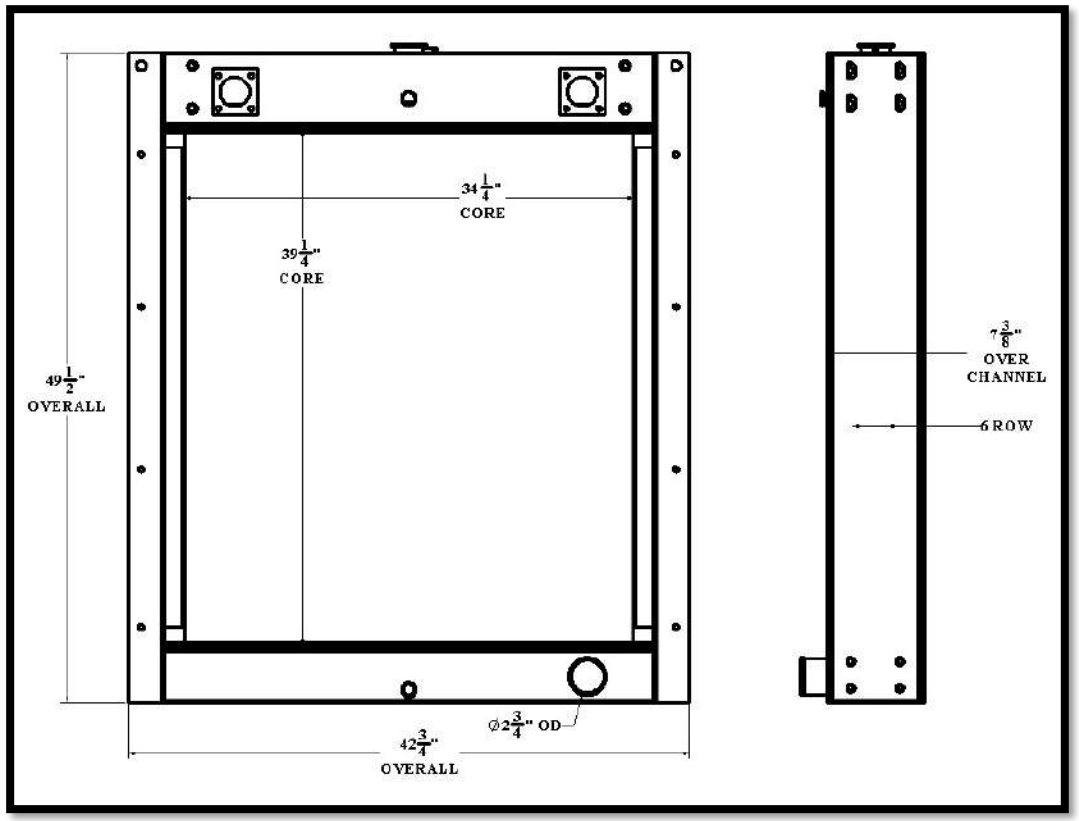

Overall Dimensions: 49-1/2” X 42-3/4” X 7-3/8”
Core: 39-1/4” X 34-1/4” X 6 ROW
Inlet: BOLTED FLANGE, 2 PL
Outlet: 2-3/4” OD

Tel 1.800.774.2168
www.bgrradiator.com

BGR Part Number: BT-0162-5I

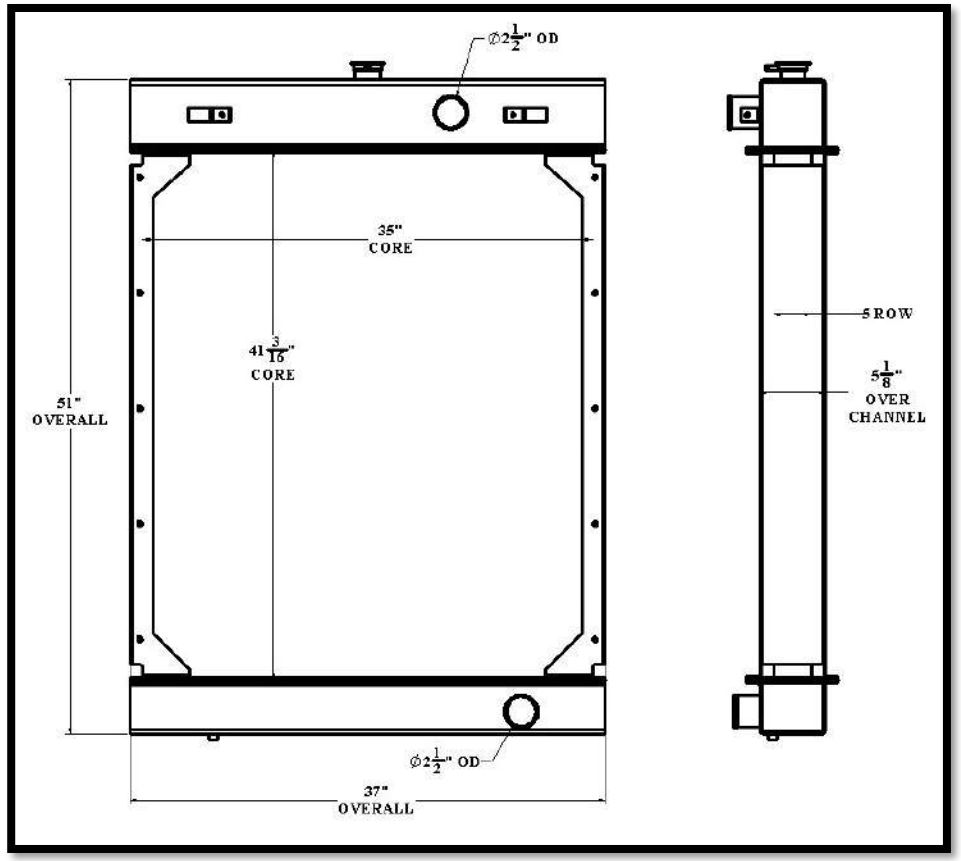

Overall Dimensions: 51” X 37” X 5-1/8”
Core: 41-3/16” X 35” X 5 ROW
Inlet: 2-1/2” OD
Outlet: 2-1/2” OD

Listed dimensions may vary slightly from OE

BGR Part Number: BT-0163-5I

5646500001, 5646505601197, 120512BK, 120-512

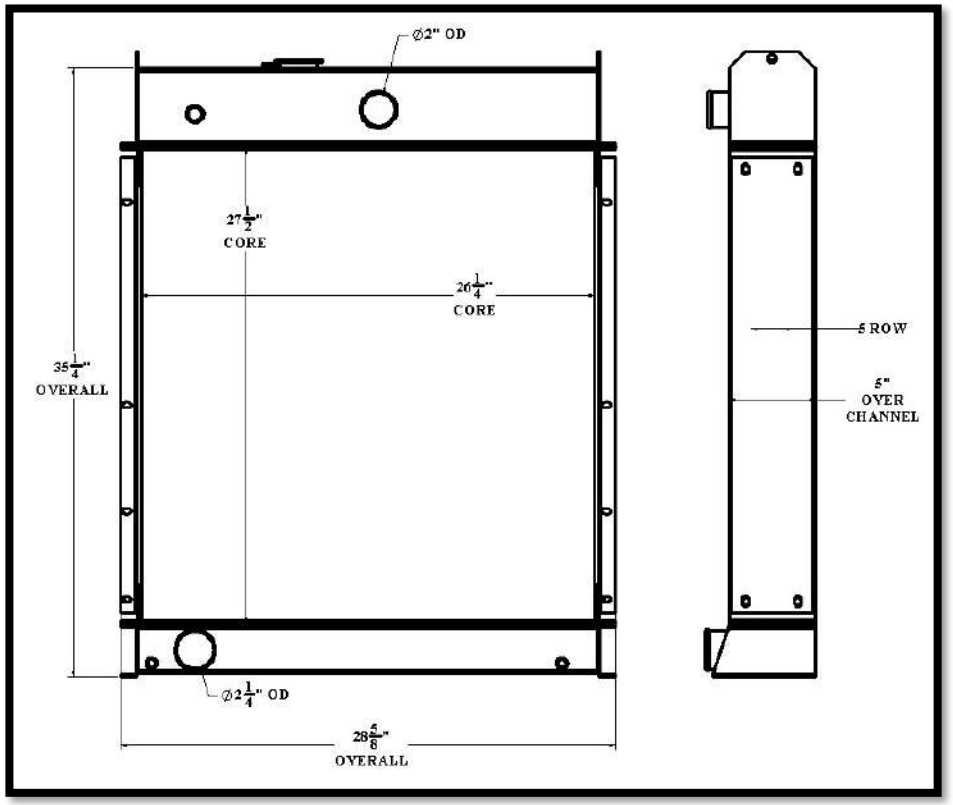

Overall Dimensions: 35-1/4” X 28-5/8” X 5”

Core: 27-1/2” X 26-1/4” X 5 ROW

Inlet: 2” OD

Outlet: 2-1/4” OD

Tel 1.800.774.2168
www.bgrradiator.com

BGR Part Number: BT-0164-4M

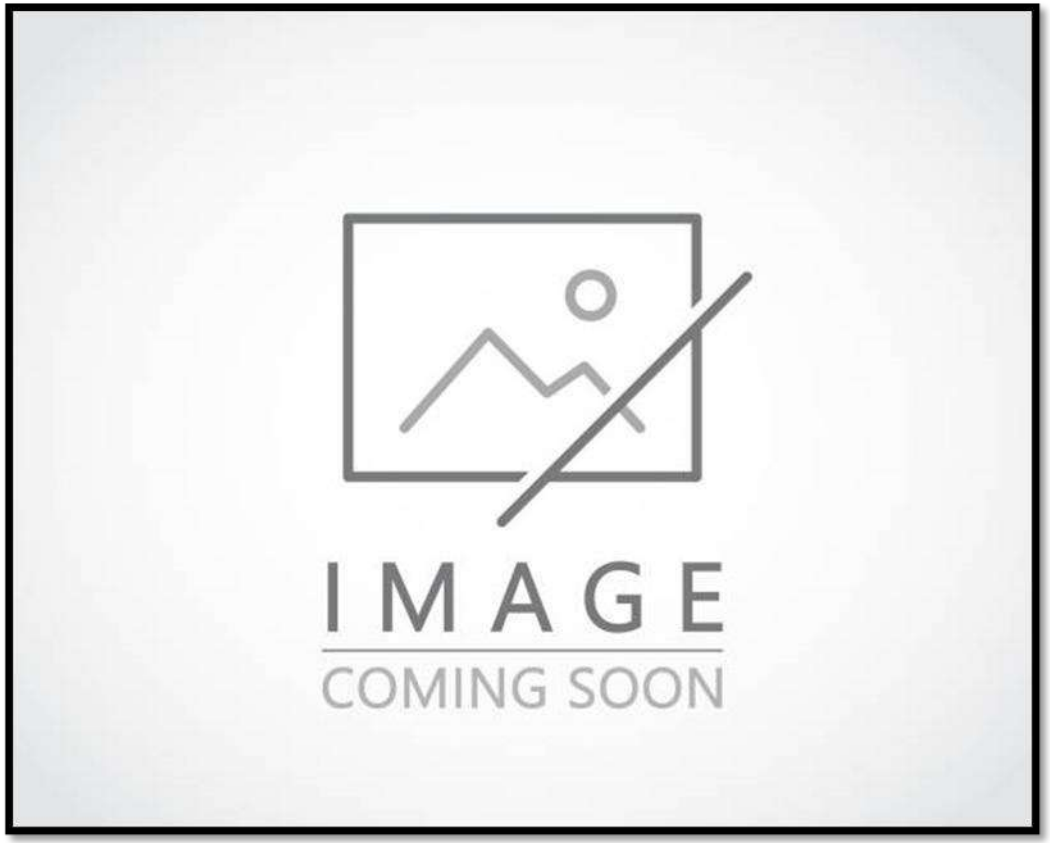

Overall Dimensions:

Core:

Inlet:

Outlet:

Listed dimensions may vary slightly from OE

BGR Part Number: BT-0165-5I
RS-8232

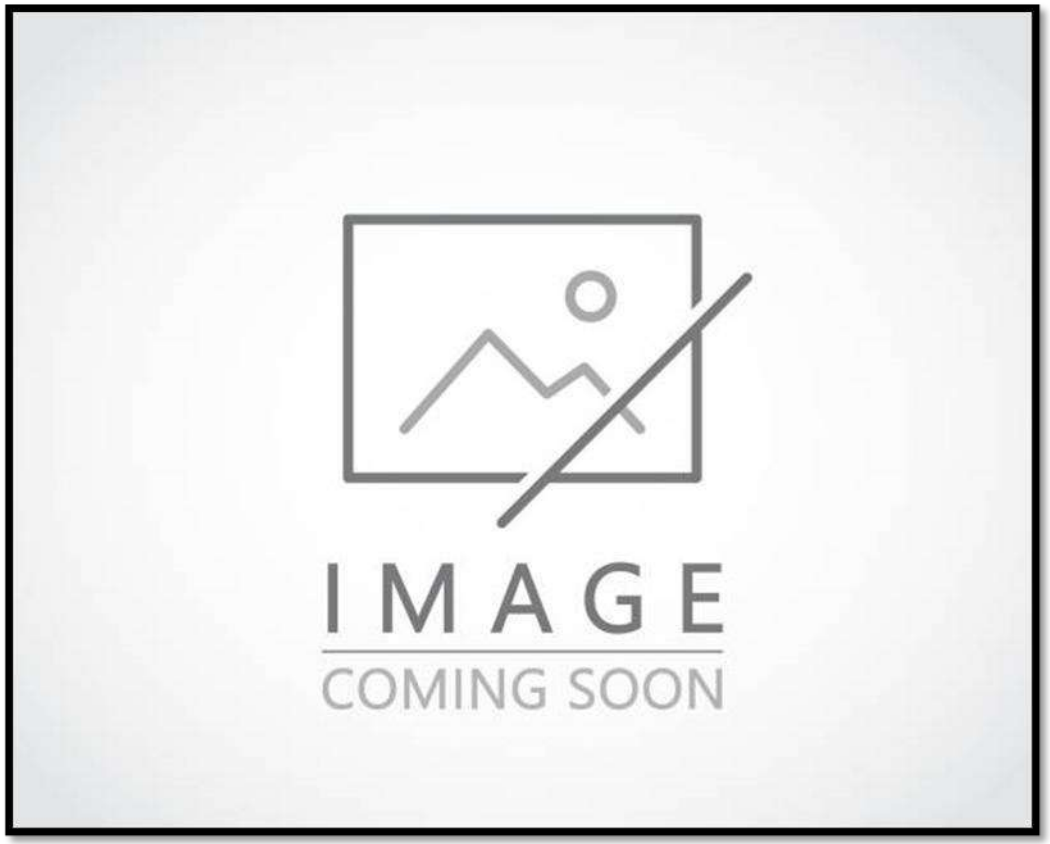

Overall Dimensions:
Core:
Inlet:
Outlet:

Tel 1.800.774.2168
www.bgrradiator.com

BGR Part Number: BT-0166-6Y
SP03970, M-20-EF

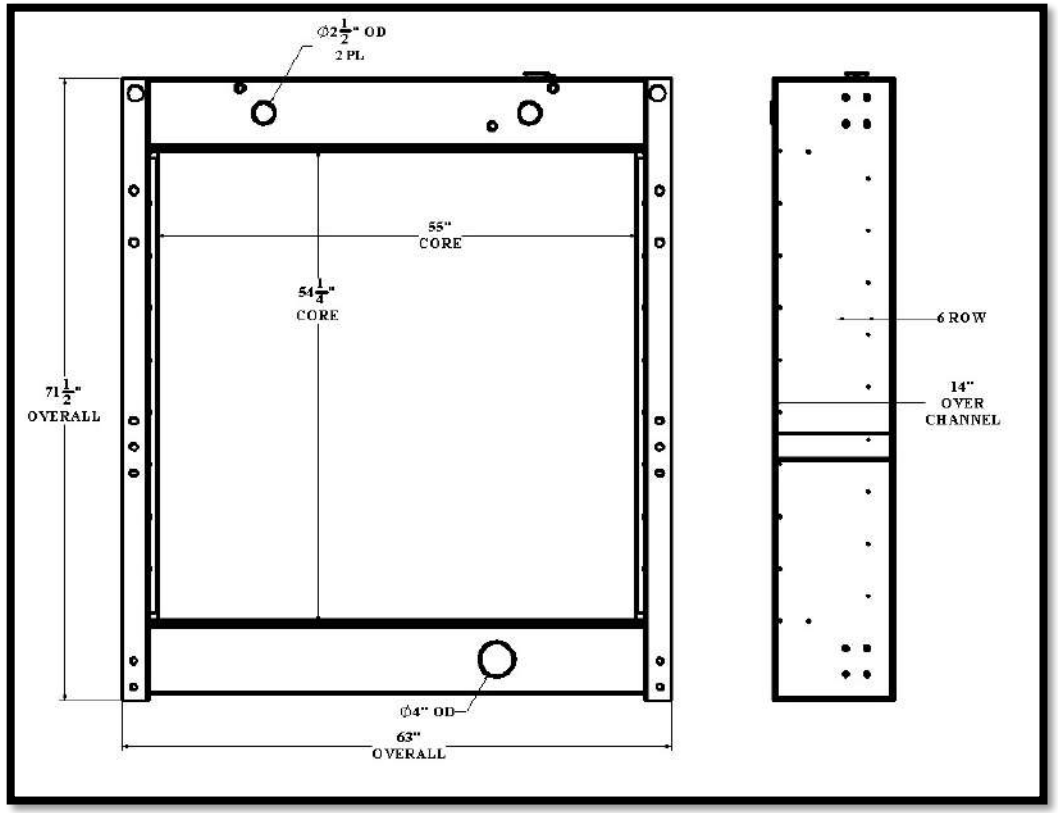

Overall Dimensions: 71-1/2” X 63” X 14”
Core: 54-1/4” X 55” X 6 ROW
Inlet: 2-1/2” OD, 2 PL
Outlet: 4” OD

Listed dimensions may vary slightly from OE

BGR Part Number: BT-0167-5I
65.06101.7034, 440211-00197, P22FE

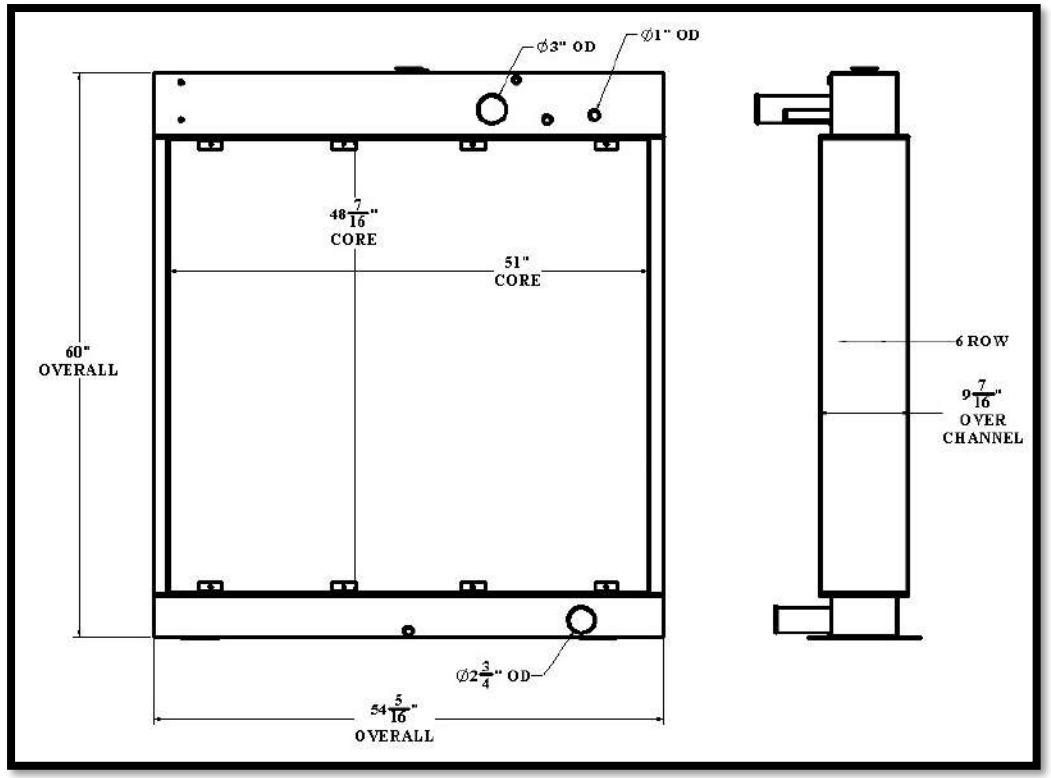

Overall Dimensions: 60” X 54-5/16” X 9-7/16”
Core: 48-7/16” X 51” X 6 ROW
Inlet: 3” OD
Outlet: 2-3/4” OD

Tel 1.800.774.2168
www.bgrradiator.com

BGR Part Number: BT-0168-8I8I
CAT 3516, Young Touchstone 417309

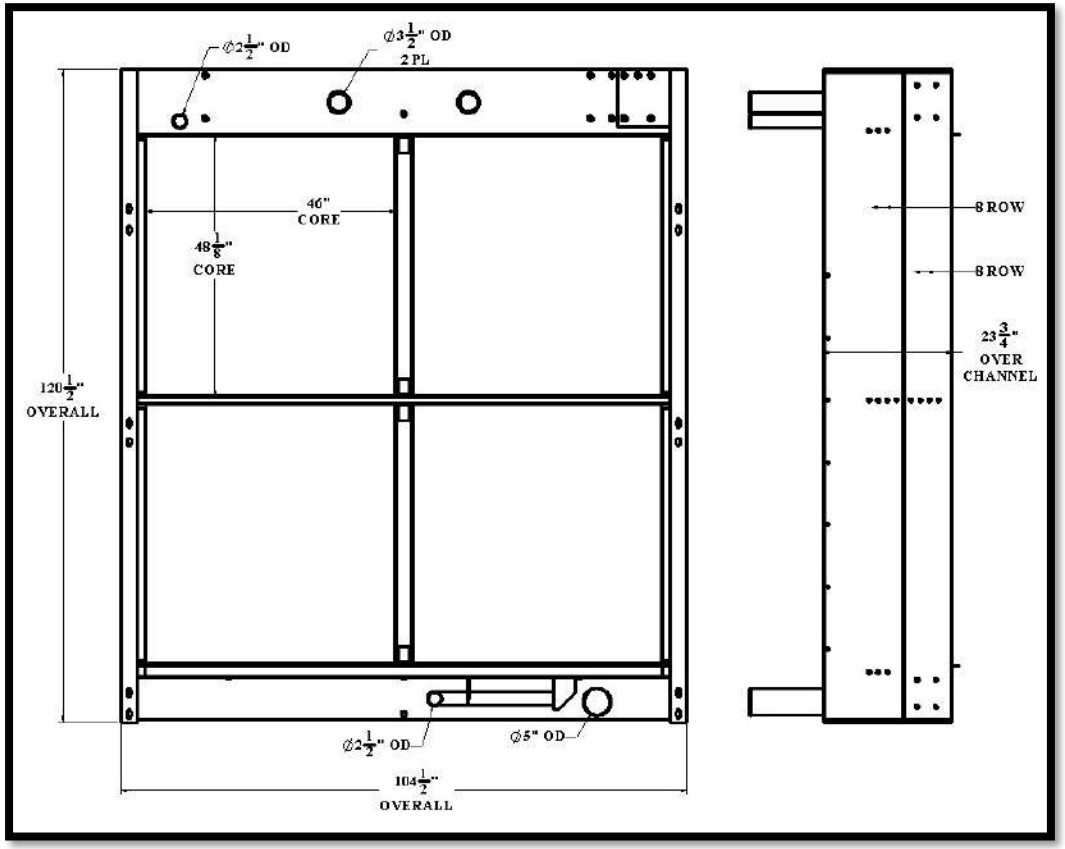

Overall Dimensions: 120-1/2” X 104-1/2” X 22-3/4”
JW & AC Core: 48-1/8” X 46” X 8 ROW
AC Inlet: 2-1/2” OD
AC Outlet: 2-1/2” OD
JW Inlet: 3-1/2” OD, 2 PL
JW Outlet: 5” OD

Listed dimensions may vary slightly from OE

BGR Part Number: BT-0169-4I

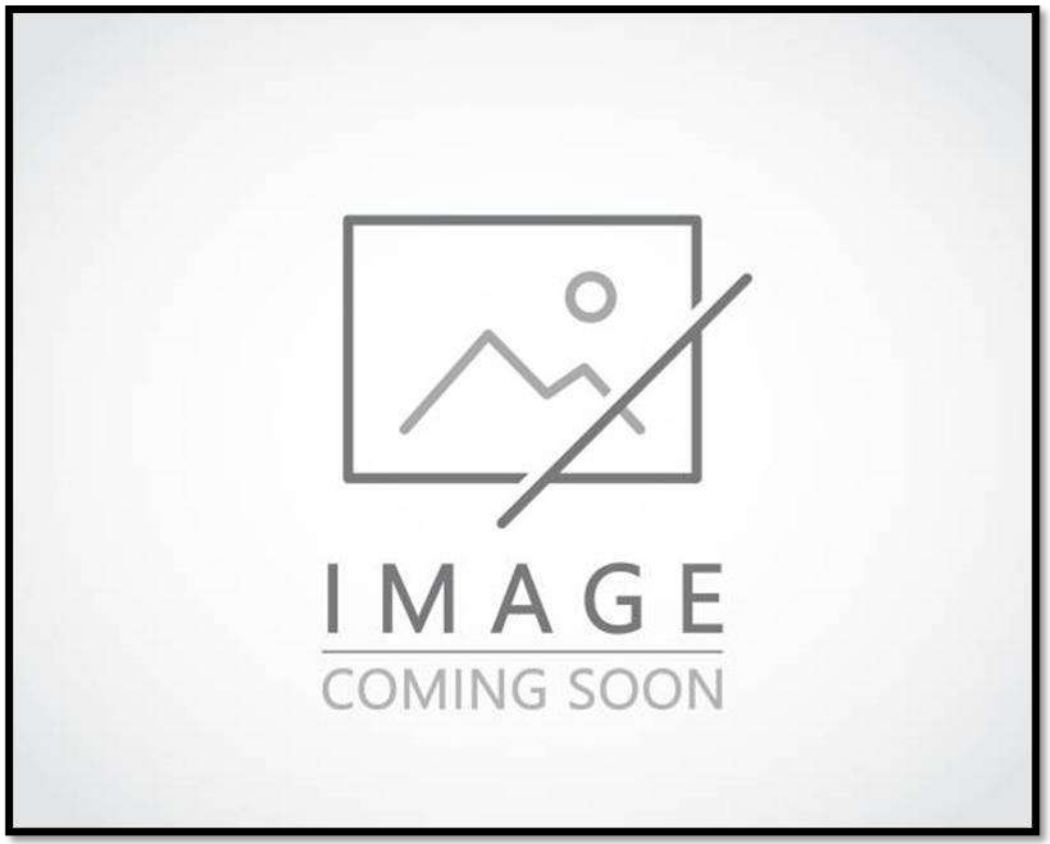

Overall Dimensions:
Core:
Inlet:
Outlet:

Tel 1.800.774.2168
www.bgrradiator.com

BGR Part Number: BT-0170-4I
Cummins 3050217

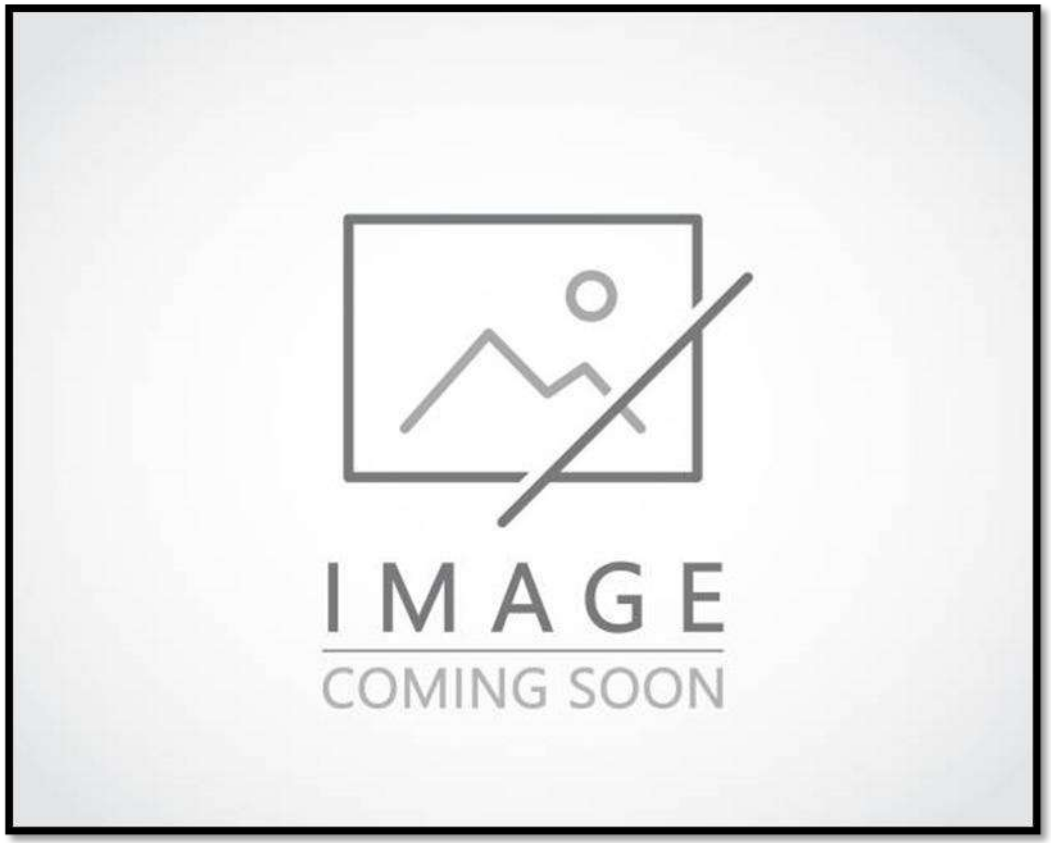

Overall Dimensions:
Core:
Inlet:
Outlet:

BT169

Listed dimensions may vary slightly from OE

BT170

BGR Part Number: BT-0171-7I7I

12036, 3602C

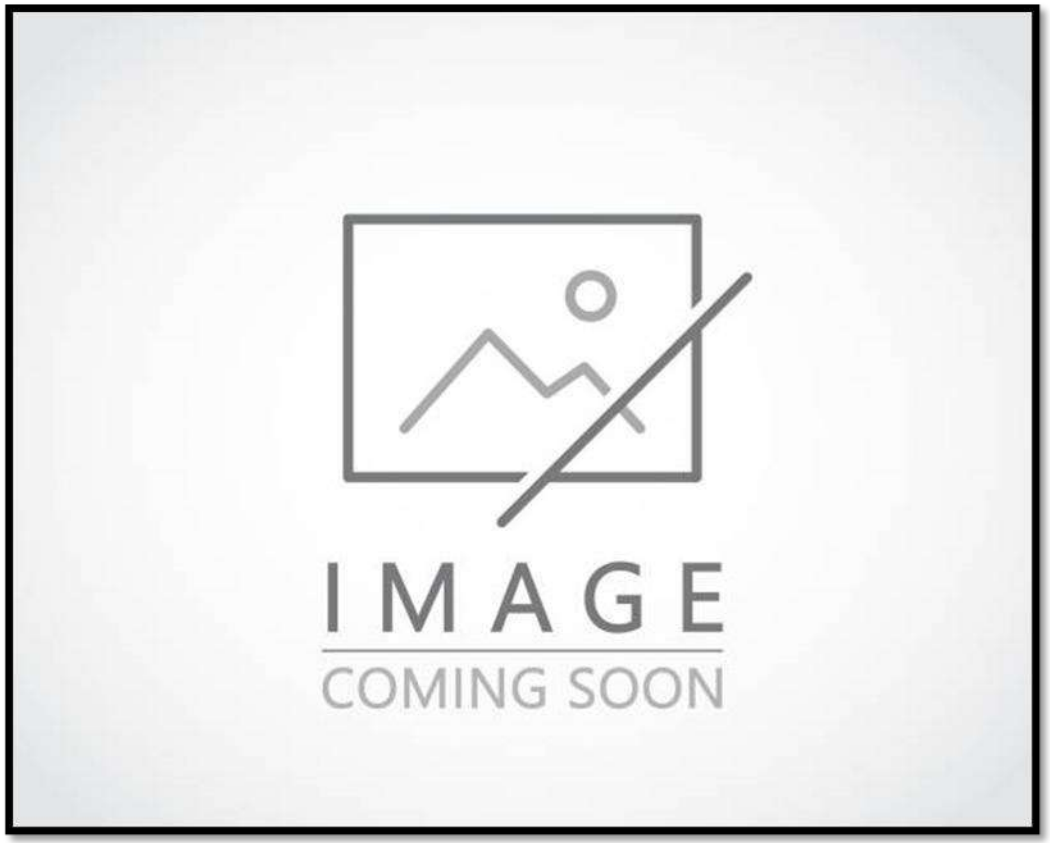

Overall Dimensions:

Core:

Inlet:

Outlet:

Tel 1.800.774.2168
www.bgrradiator.com

BGR Part Number: BT-0172-4I

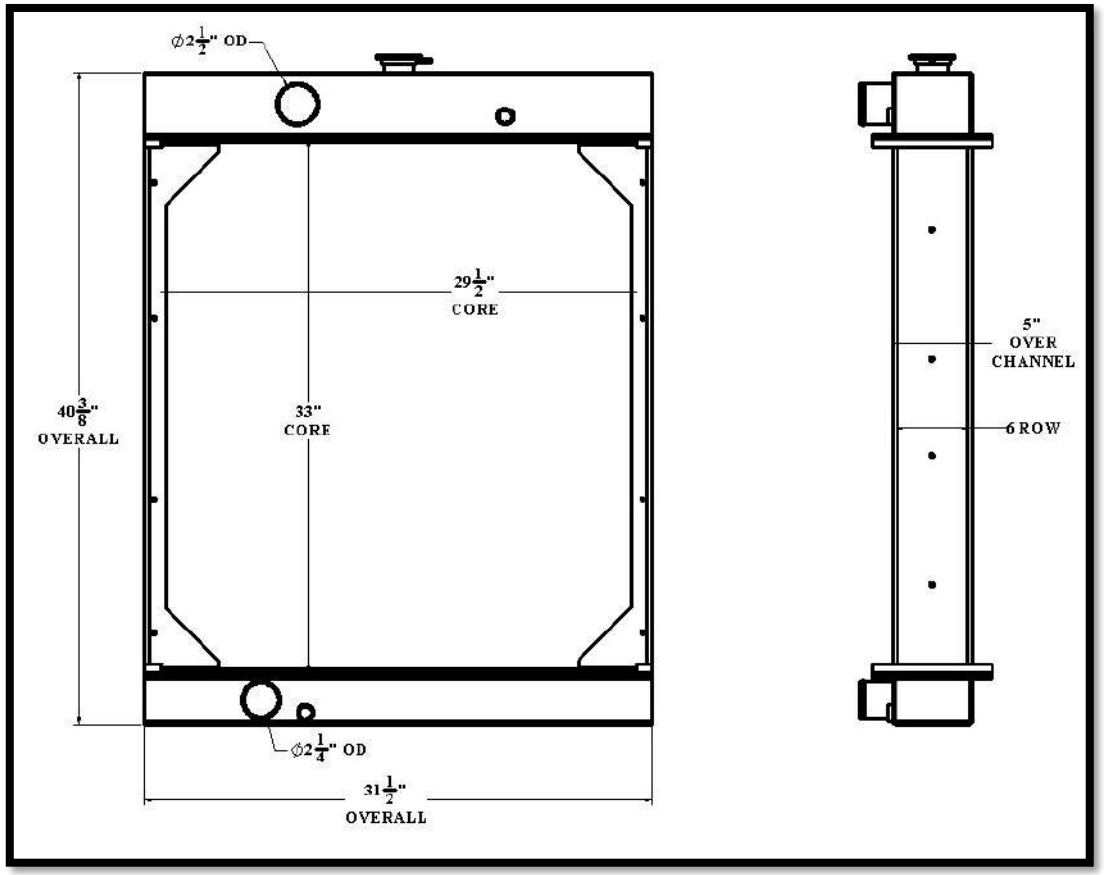

Overall Dimensions: 40-3/8” X 31-1/2” X 5”

Core: 33” X 29-1/2” X 6 ROW

Inlet: 2-1/2” OD

Outlet: 2-1/4” OD

Listed dimensions may vary slightly from OE

BGR Part Number: BT-0173-5M
A-361529, 1A18333, 00270-6

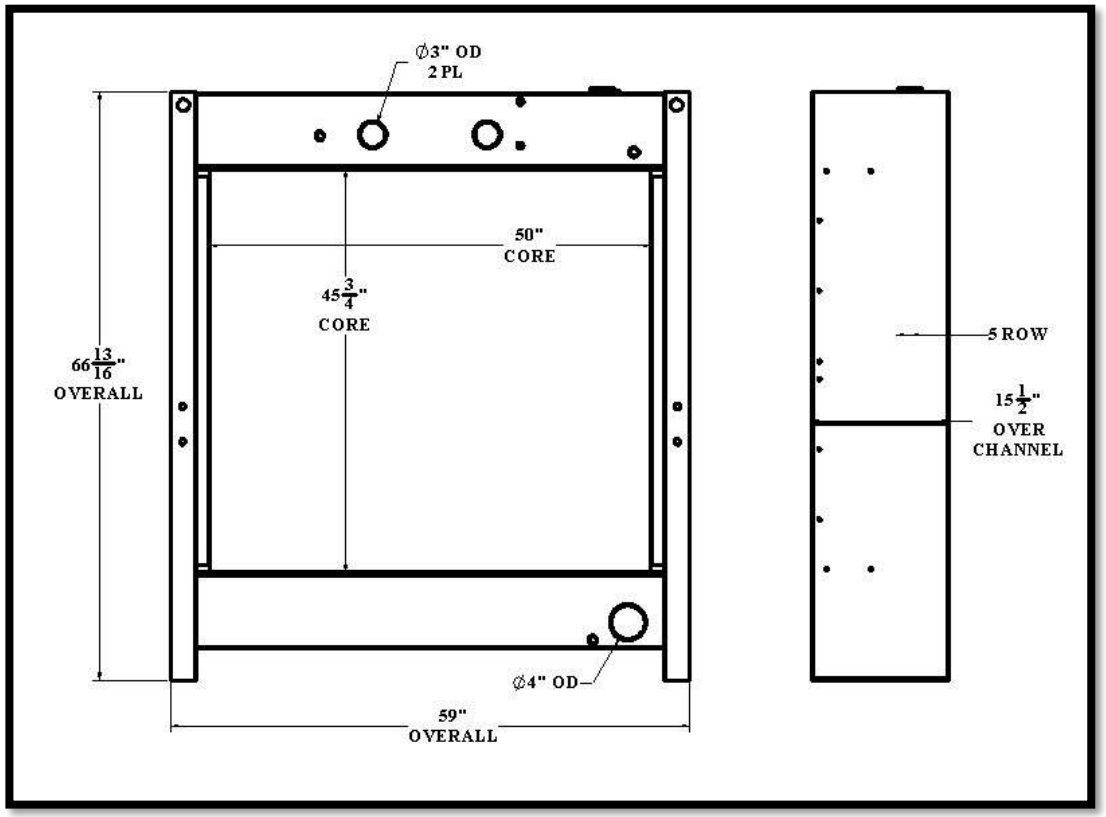

Overall Dimensions: 66-13/16” X 59” X 15-1/2”
Core: 45-3/4” X 50” X 5 ROW
Inlet: 3” OD, 2 PL
Outlet: 4” OD

Tel 1.800.774.2168
www.bgrradiator.com

BGR Part Number: BT-0174-5I
Cummins NTA855G

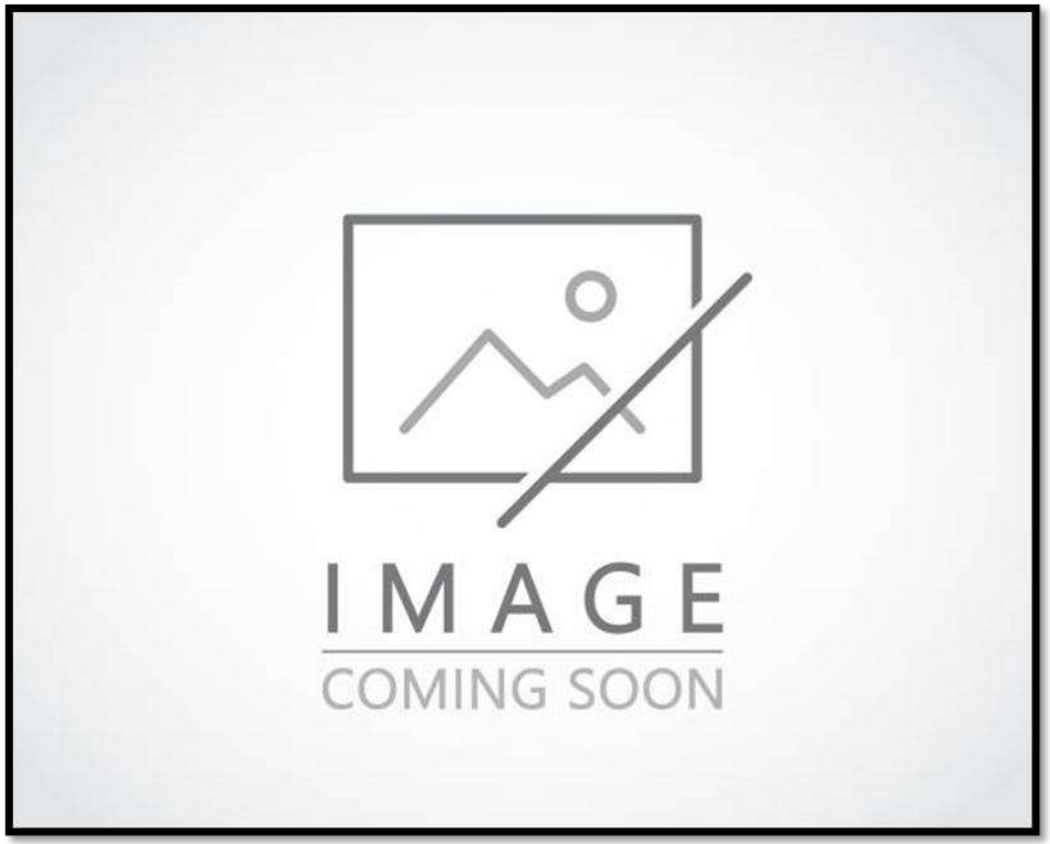

Overall Dimensions:
Core:
Inlet:
Outlet:

Listed dimensions may vary slightly from OE

BGR Part Number: BT-0175-7I
0179-4661, 5684000001

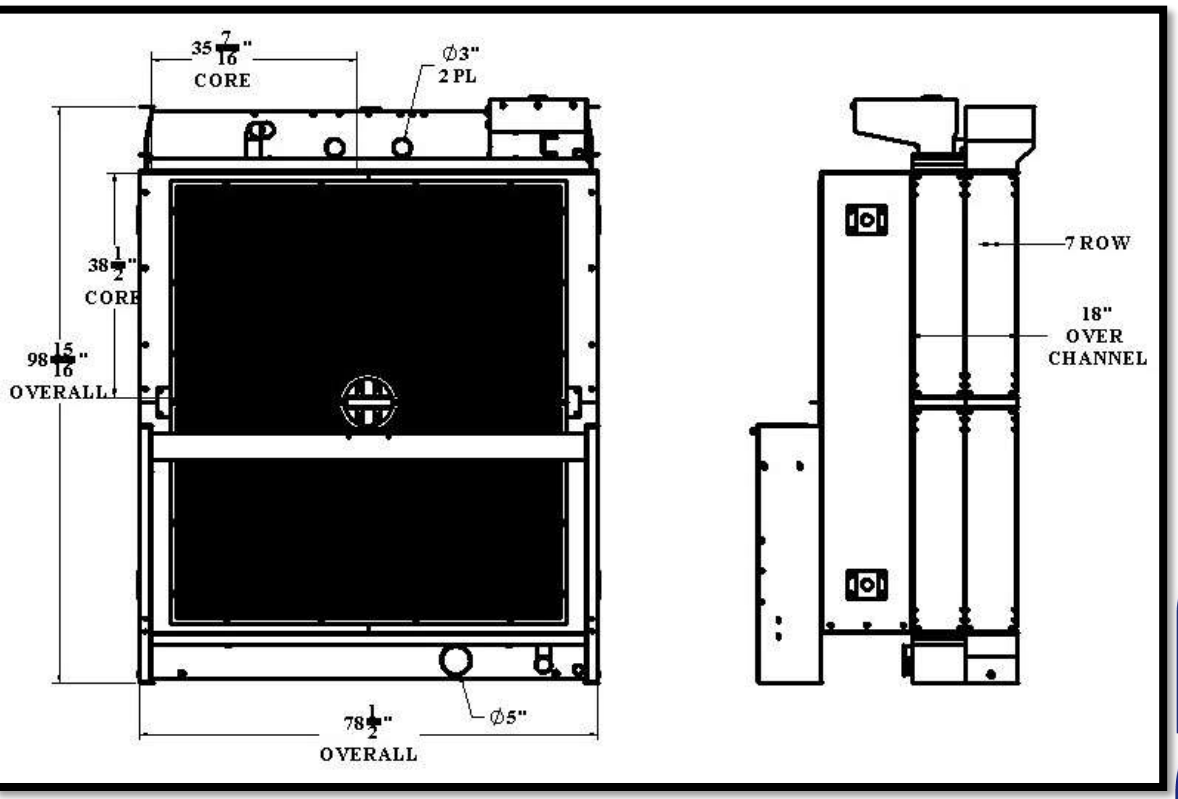

Overall Dimensions: 98-15/16” X 78-1/2” X 18”
Core:38-1/2” X 35-7/16” X 7 ROW
Inlet:3” 2 PL
Outlet:5”

Tel 1.800.774.2168
www.bgrradiator.com

BGR Part Number: BT-0176-7I

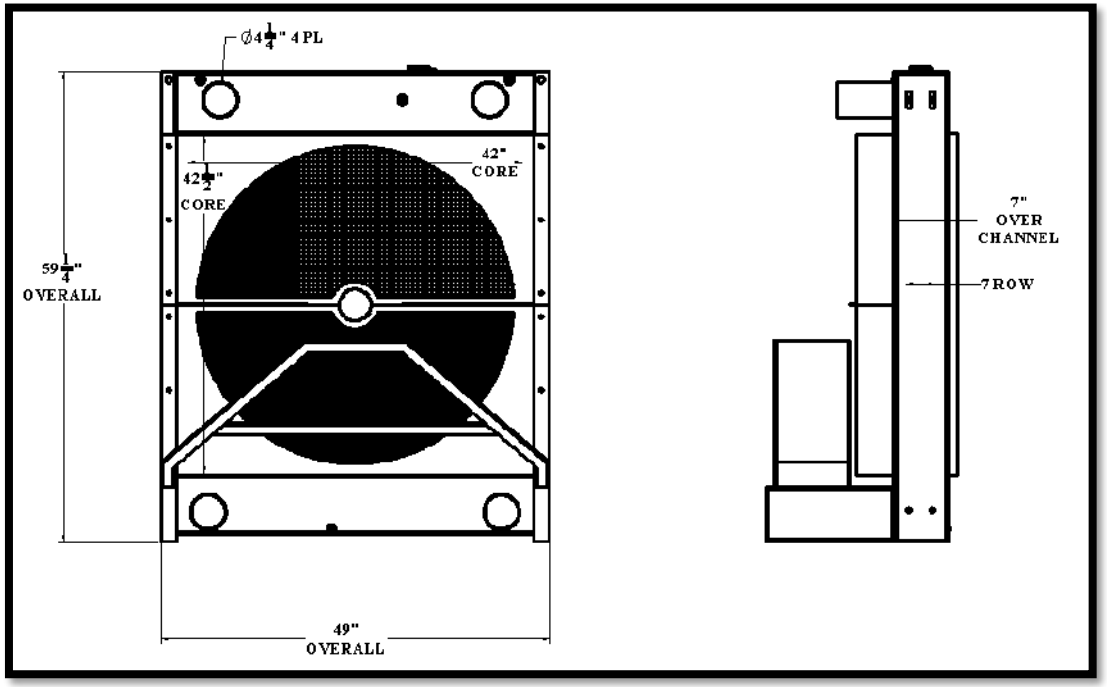

Overall Dimensions:59-1/4” X 49” X 7”
Core:42-1/2” X 42” X 7 ROW
Inlet:4-1/2” 2 PL
Outlet:4-1/2” 2 PL

BT175

Listed dimensions may vary slightly from OE

BT176

BGR Part Number: BT-0177-7I

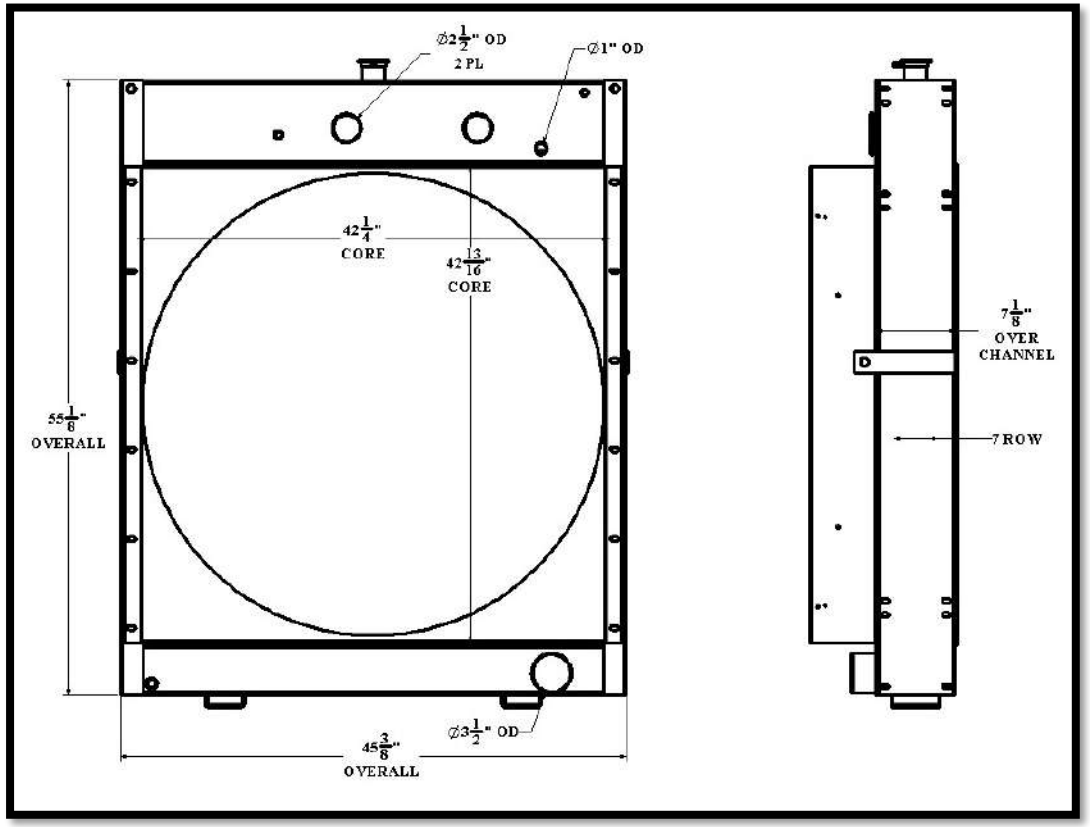

Overall Dimensions: 55-1/8” X 45-3/8” X 7-1/8”
Core: 42-13/16” X 42-1/4” X 7 ROW
Inlet: 2-1/2” OD, 2 PL
Outlet: 3-1/2” OD

Tel 1.800.774.2168
www.bgrradiator.com

BGR Part Number: BT-0178-7R

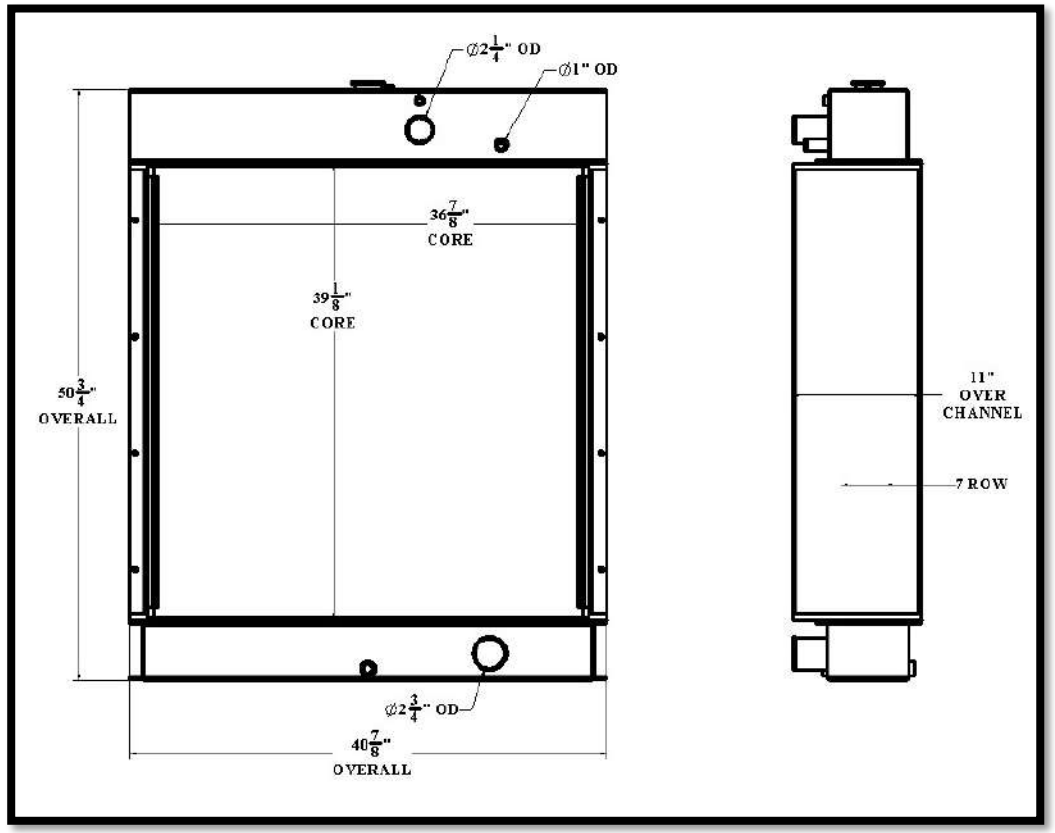

Overall Dimensions: 50-3/4” X 40-7/8” X 11”
Core: 39-1/8” X 36-7/8” X 7 ROW
Inlet: 2-1/4” OD
Outlet: 2-3/4” OD

Listed dimensions may vary slightly from OE

BGR Part Number: BT-0179-7I
DIESEL RADIATOR CO. 56631, SN W13779

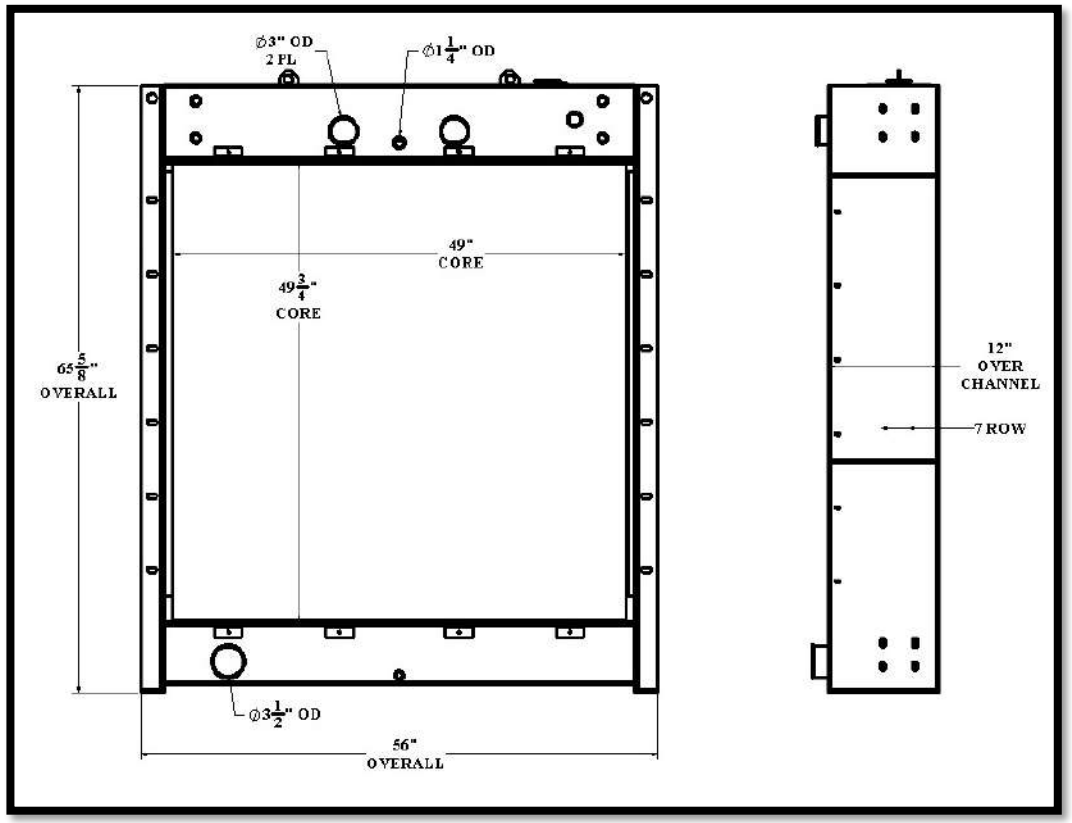

Overall Dimensions: 65-5/8” X 56” X 12”
Core: 49-3/4” X 49” X 7 ROW
Inlet: 3” OD, 2 PL
Outlet: 3-1/2” OD

Tel 1.800.774.2168
www.bgrradiator.com

BGR Part Number: BT-0180-7P

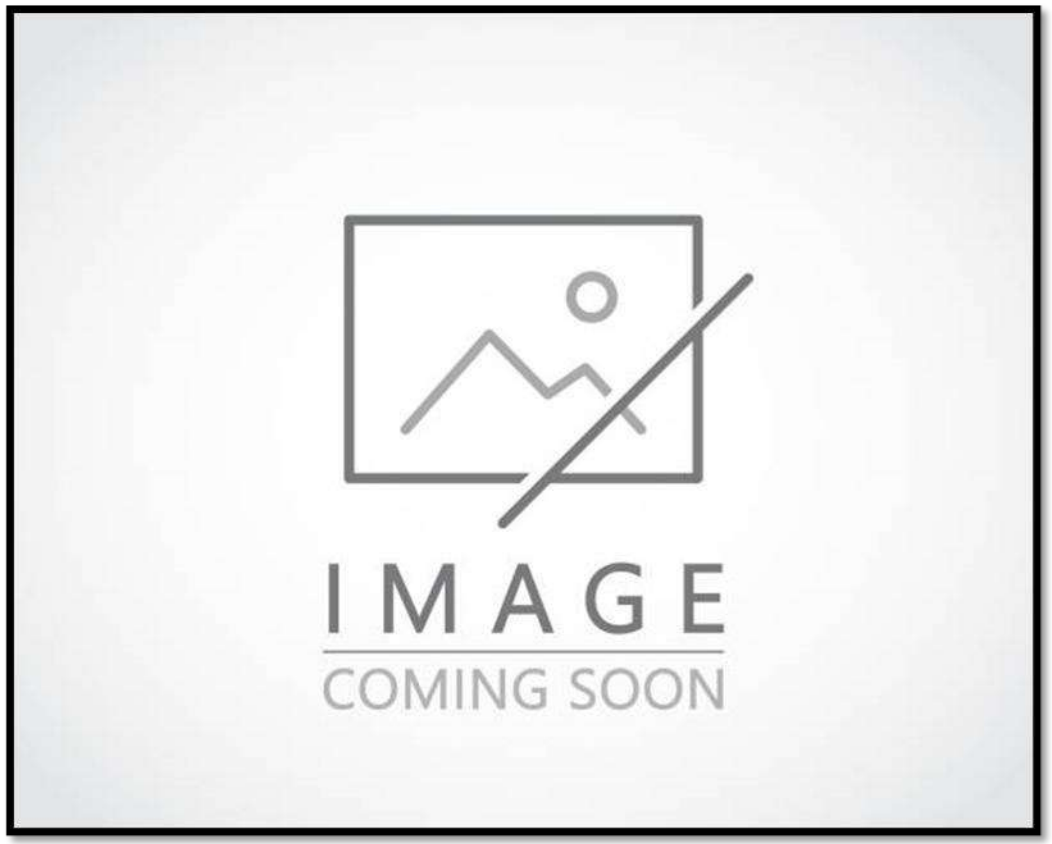

Overall Dimensions:
Core:
Inlet:
Outlet:

Listed dimensions may vary slightly from OE

BGR Part Number: BT-0181-6I

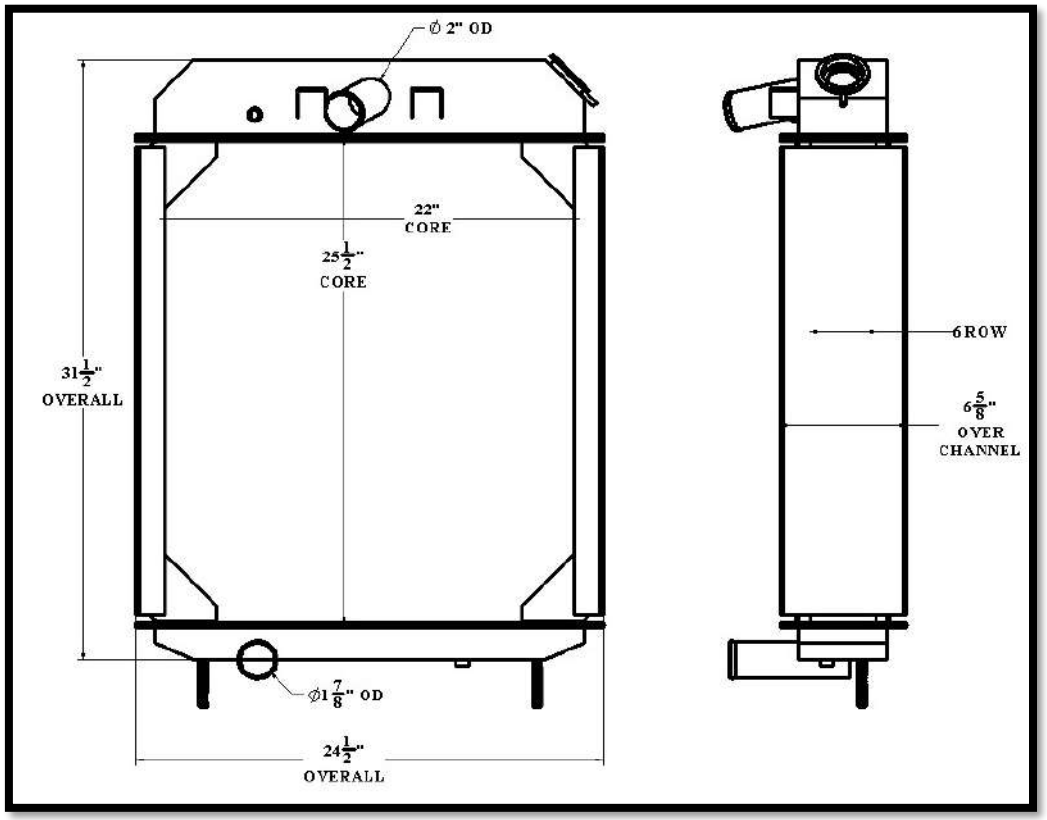

Overall Dimensions: 31-1/2” X 24-1/2” X 6-5/8”
Core: 25-1/2” X 22” X 6 ROW
Inlet: 2” OD
Outlet: 1-7/8” OD

Tel 1.800.774.2168
www.bgrradiator.com

BGR Part Number: BT-0182-4I
120-511, 120-452

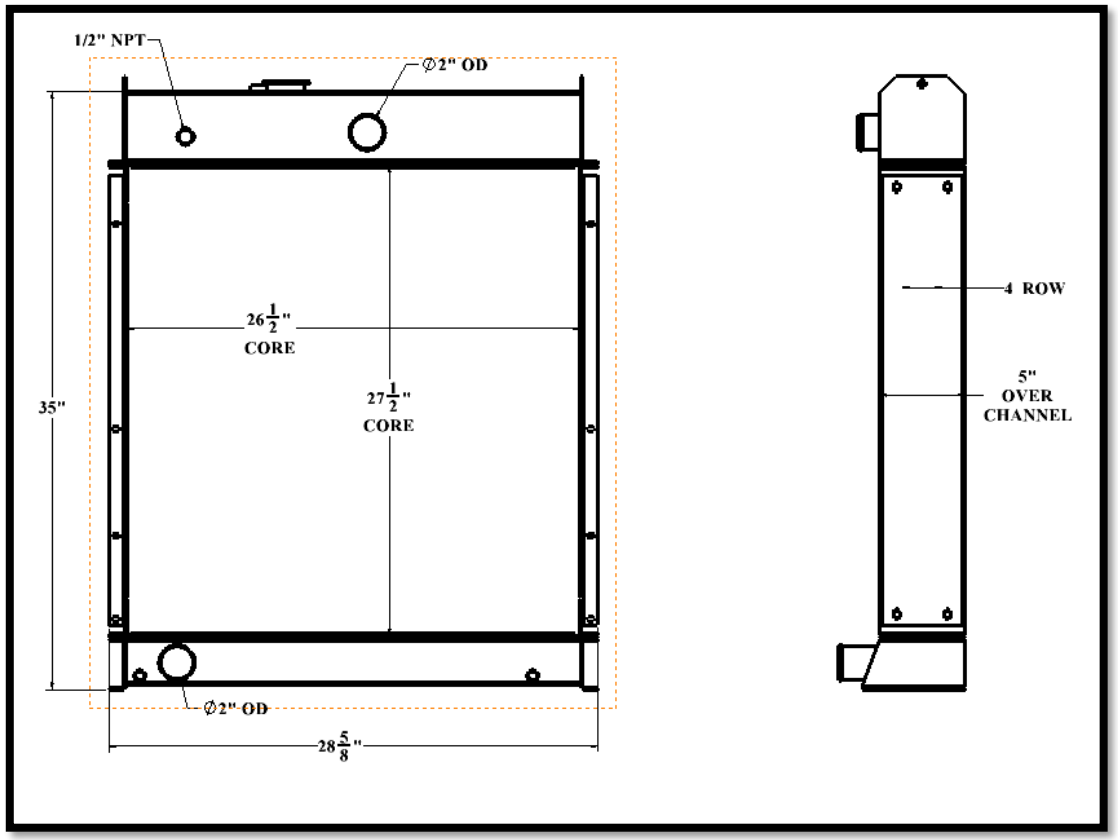

Overall Dimensions: 35” X 28-5/8” X 5”
Core: 27-1/2” X 26-1/2” X 4 ROW
Inlet: 2” OD
Outlet: 2” OD

Listed dimensions may vary slightly from OE

BGR Part Number: BT-0183-6M
120-446

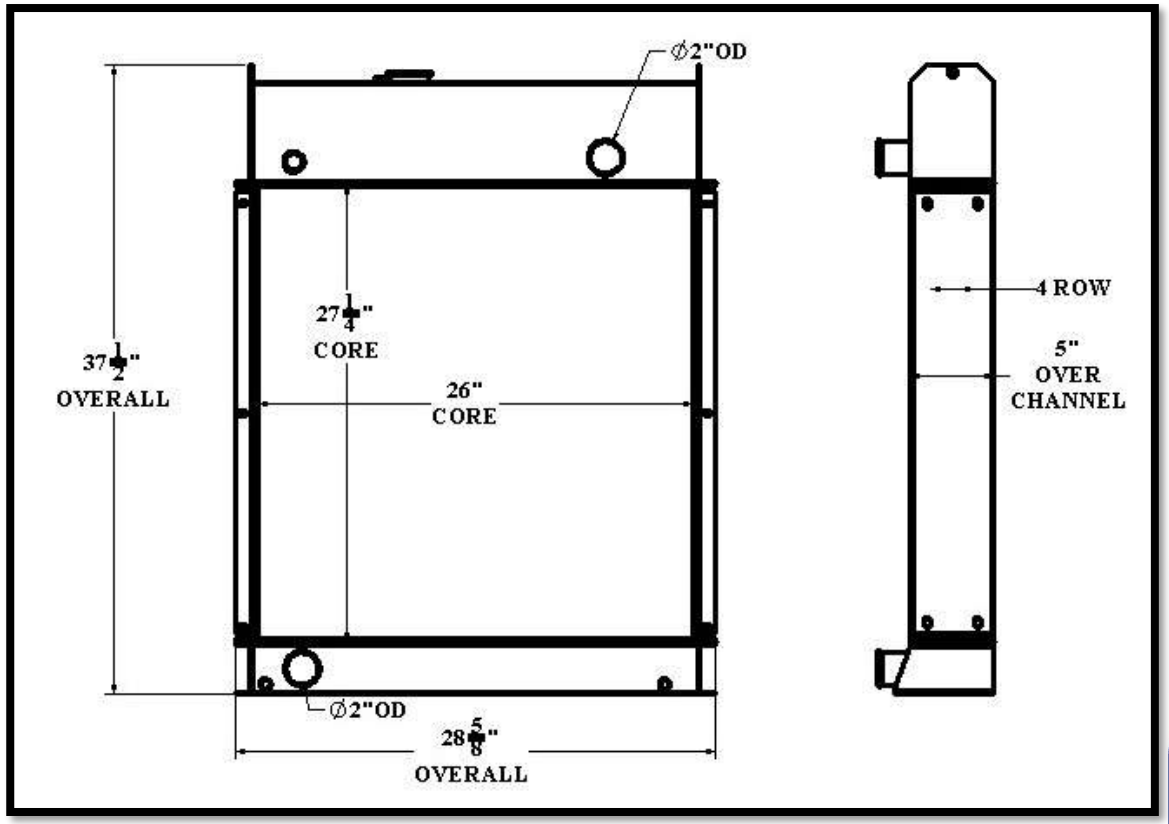

Overall Dimensions: 37-1/2” X 28-5/8” X 5”
Core: 27-1/4” X 26” X 4 ROW
Inlet:2”OD
Outlet:2”OD

Tel 1.800.774.2168
www.bgrradiator.com

BGR Part Number: BT-0184-6I
7C-4402

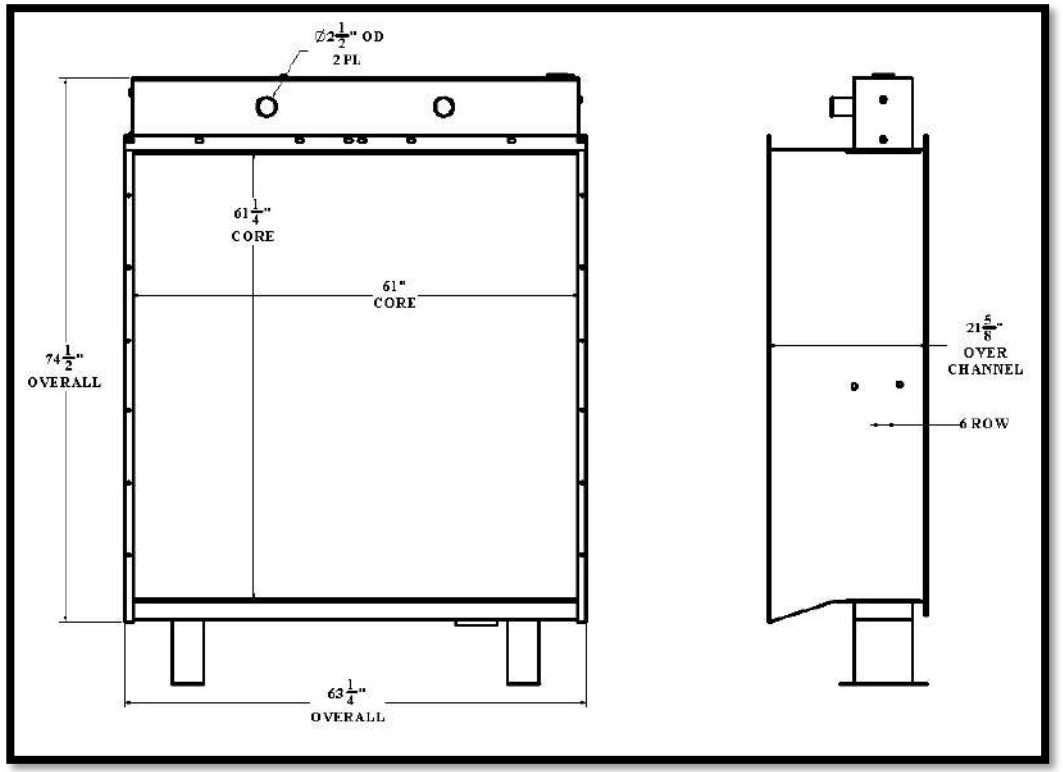

Overall Dimensions: 74-1/2” X 63-1/4” X 21-5/8”
Core: 61-1/4” X 61” X 6 ROW
Inlet: 2-1/2” OD
Outlet: BOLTED FLANGE

Listed dimensions may vary slightly from OE

BGR Part Number: BT-0185-7I
SP04567

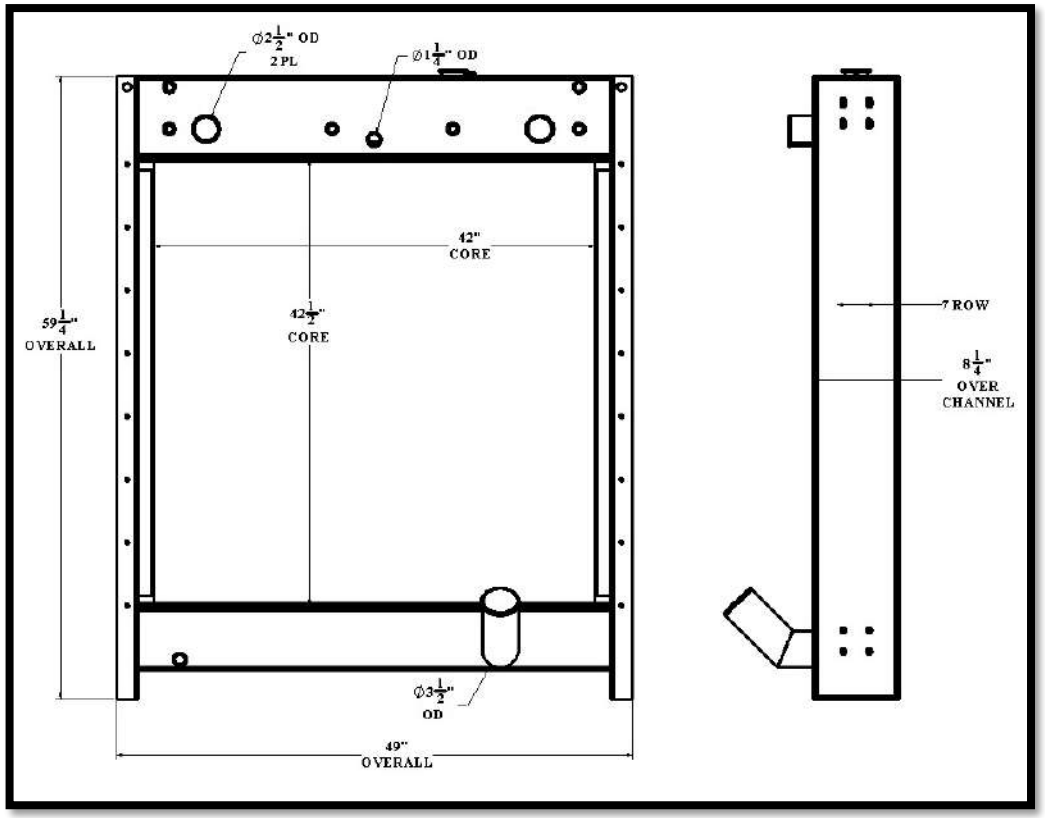

Overall Dimensions: 59-1/4” X 49” X 8-1/4”
Core: 42-1/2” X 42” X 7 ROW
Inlet: 2-1/2” OD, 2 PL
Outlet: 3-1/2” OD

Tel 1.800.774.2168
www.bgrradiator.com

BGR Part Number: BT-0186-7I
4L4687, 10R0740, 4L4687

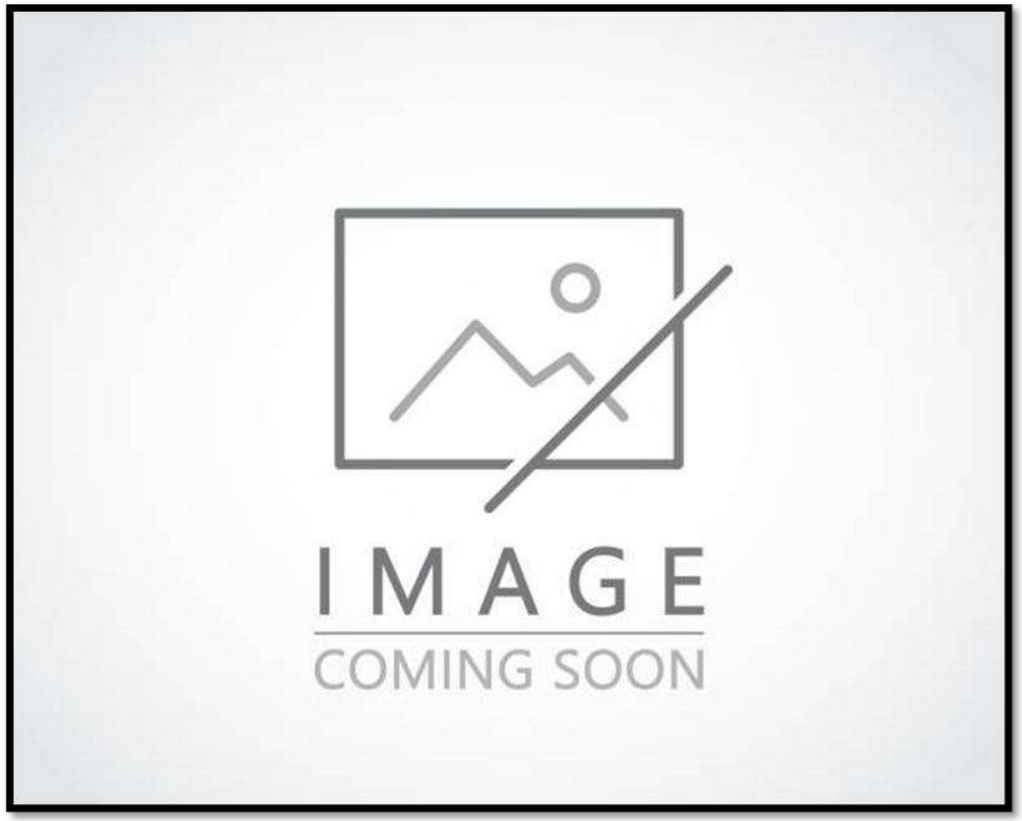

Overall Dimensions:
Core:
Inlet:
Outlet:

Listed dimensions may vary slightly from OE

BGR Part Number: BT-0187-7I7I
1793173, 5652200001, A050G083, 5652200002

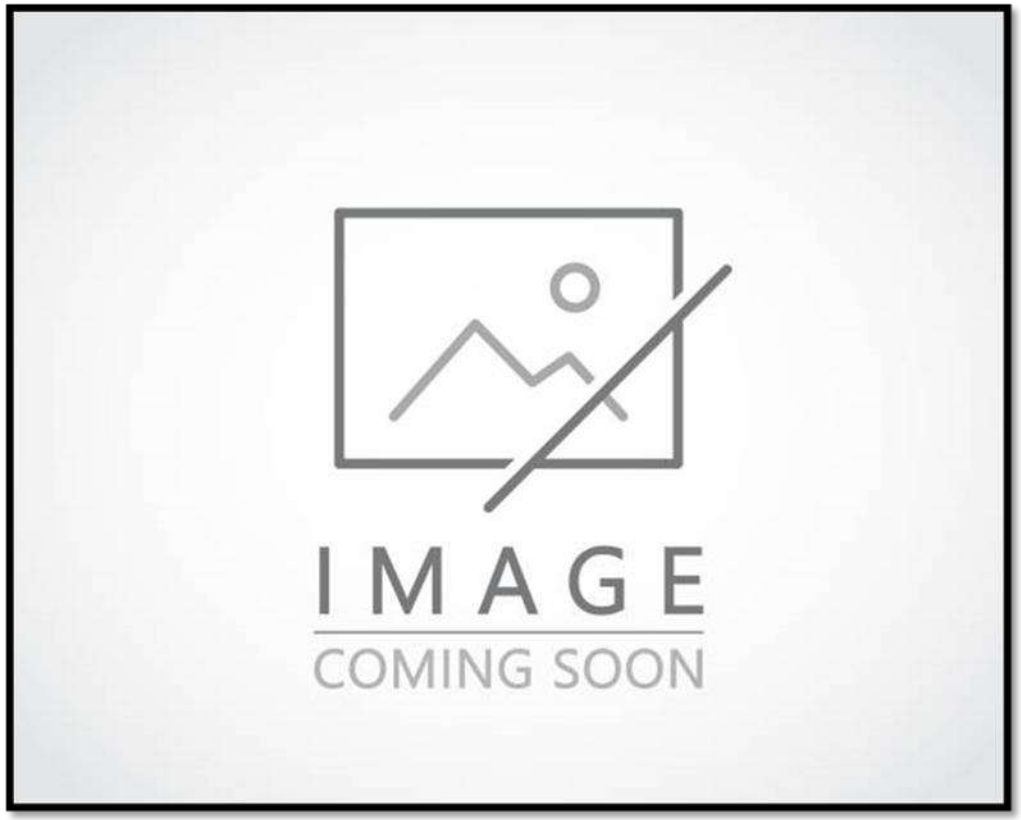

Overall Dimensions:
Core:
Inlet:
Outlet:

Tel 1.800.774.2168
www.bgrradiator.com

BGR Part Number: BT-0188-8I
333538

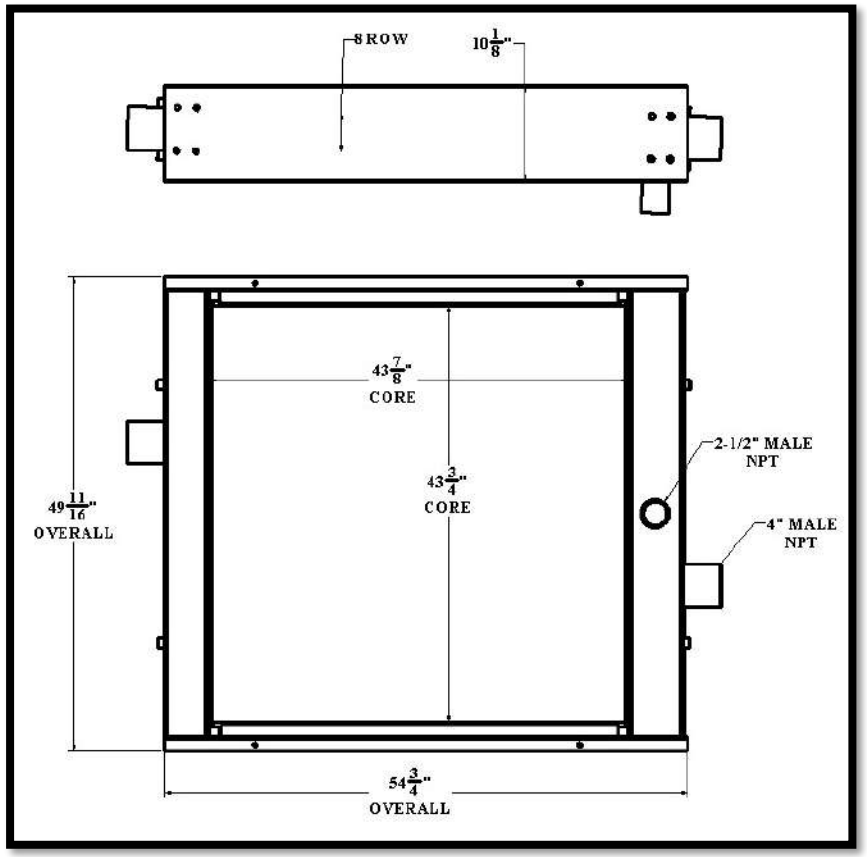

Overall Dimensions: 54-3/4” X 49-11/16” X 10-1/8”
Core: 43-7/8” X 43-3/4” X 8 ROW
Inlet: 4” MALE NPT, 2” MALE NPT
Outlet: 4” MALE NPT

Listed dimensions may vary slightly from OE

BGR Part Number: BT-0189-3M

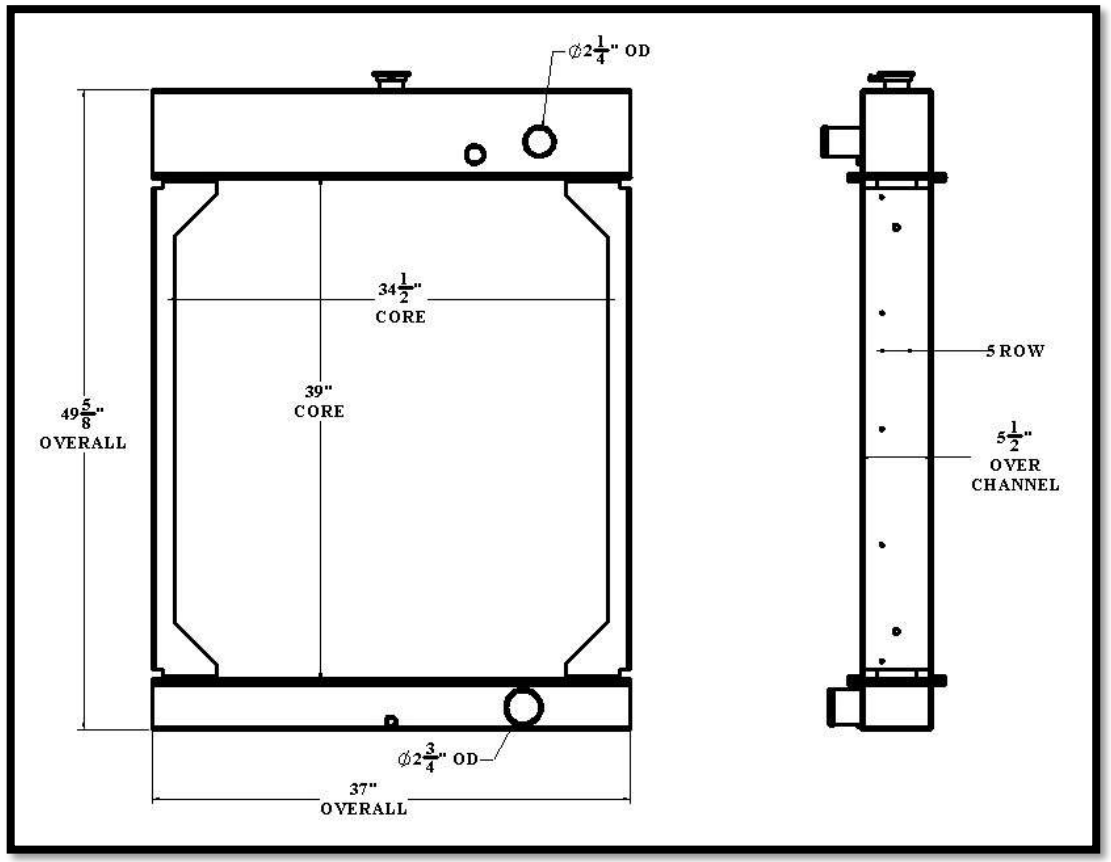

Overall Dimensions: 49-5/8” X 37” X 5-1/2”
Core: 39” X 34-1/2” X 5 ROW
Inlet: 2-1/4” OD, 2 PL
Outlet: 2-3/4” OD

Tel 1.800.774.2168
www.bgrradiator.com

BGR Part Number: BT-0190-5M
120-450, 560061186

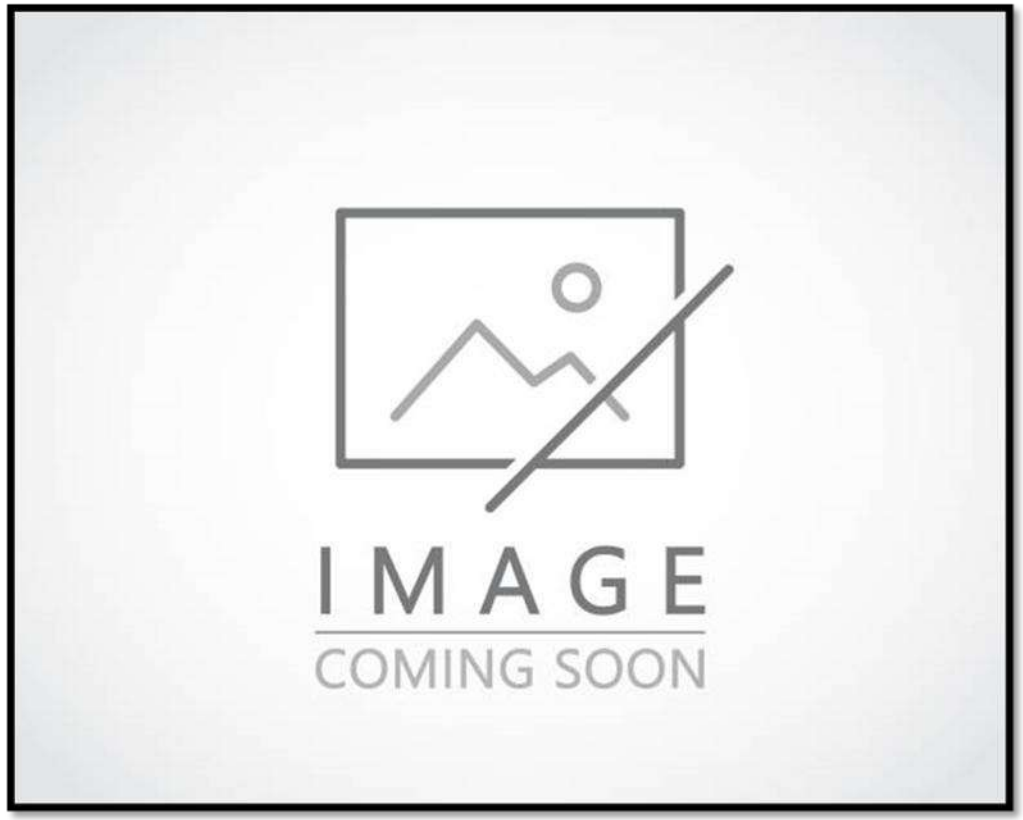

Overall Dimensions:
Core:
Inlet:
Outlet:

Listed dimensions may vary slightly from OE

BGR Part Number: BT-0191-8I8I
180-4417

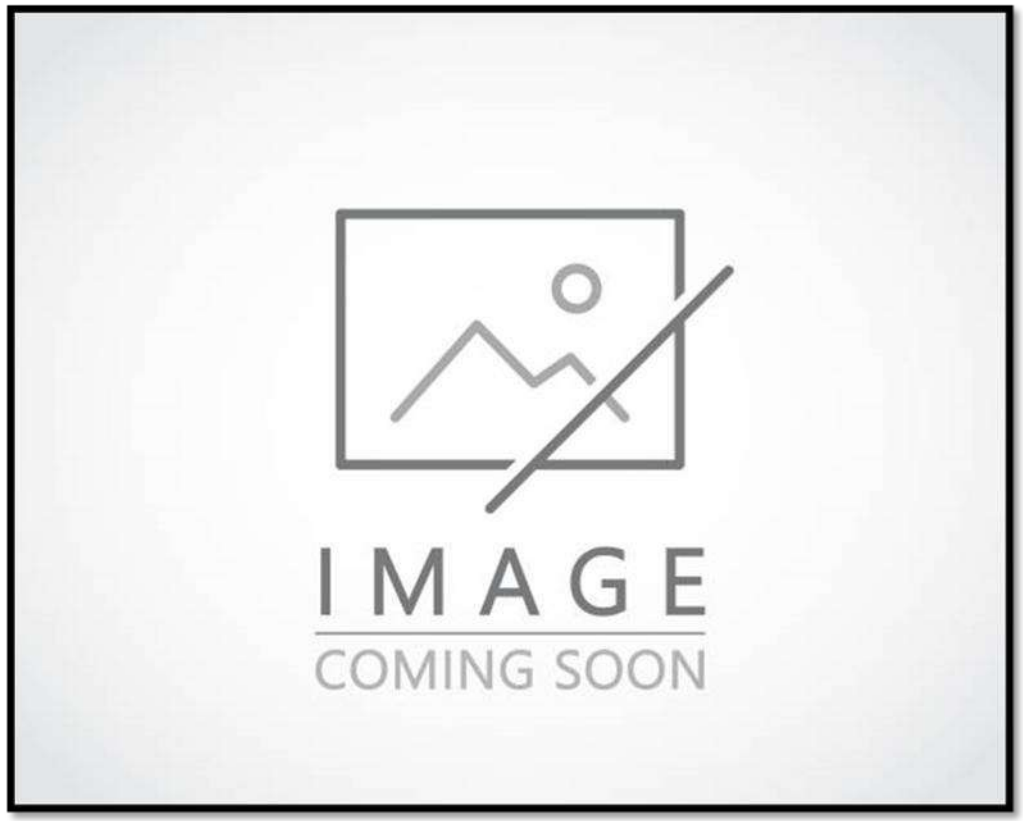

Overall Dimensions:
Core:
Inlet:
Outlet:

Tel 1.800.774.2168
www.bgrradiator.com

BGR Part Number: BT-0192-8I
25 SECTION FOLDED CORE CAT

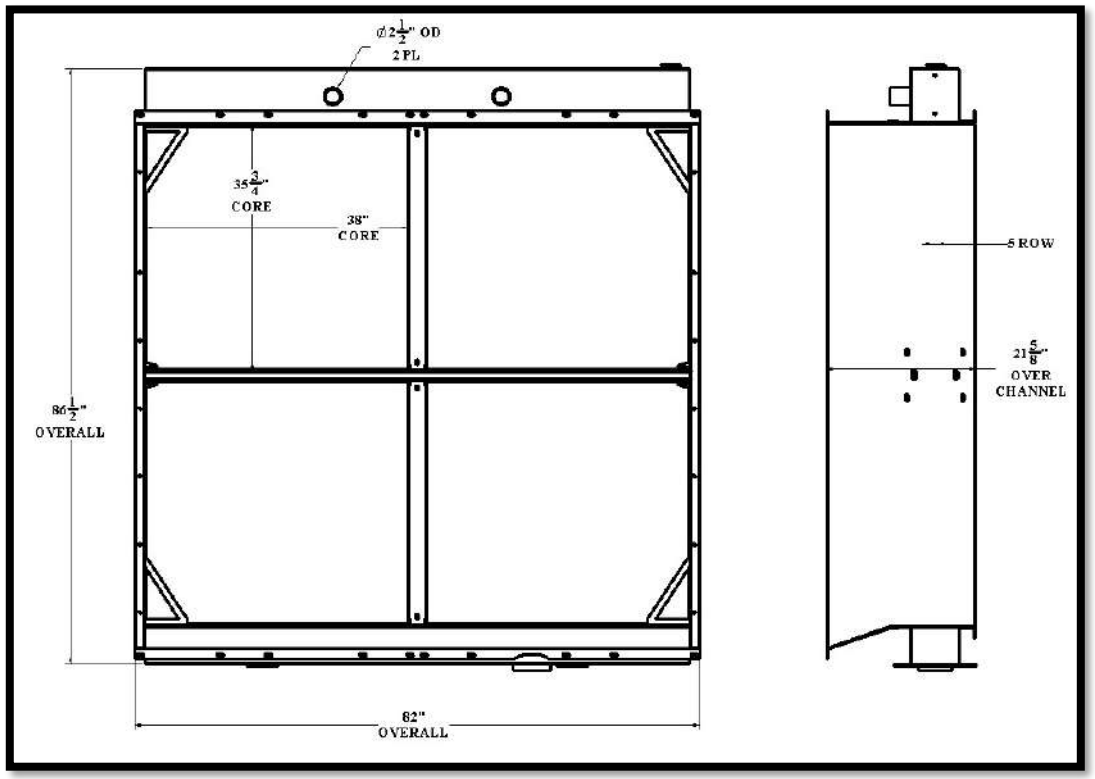

Overall Dimensions: 86-1/2” X 82” X 21-5/8”
Core: 35-3/4” X 38” X 5 ROW
Inlet: 2-1/2” OD, 2 PL
Outlet: BOLTED FLANGE

Listed dimensions may vary slightly from OE

BGR Part Number: BT-0193-5I
271-4311

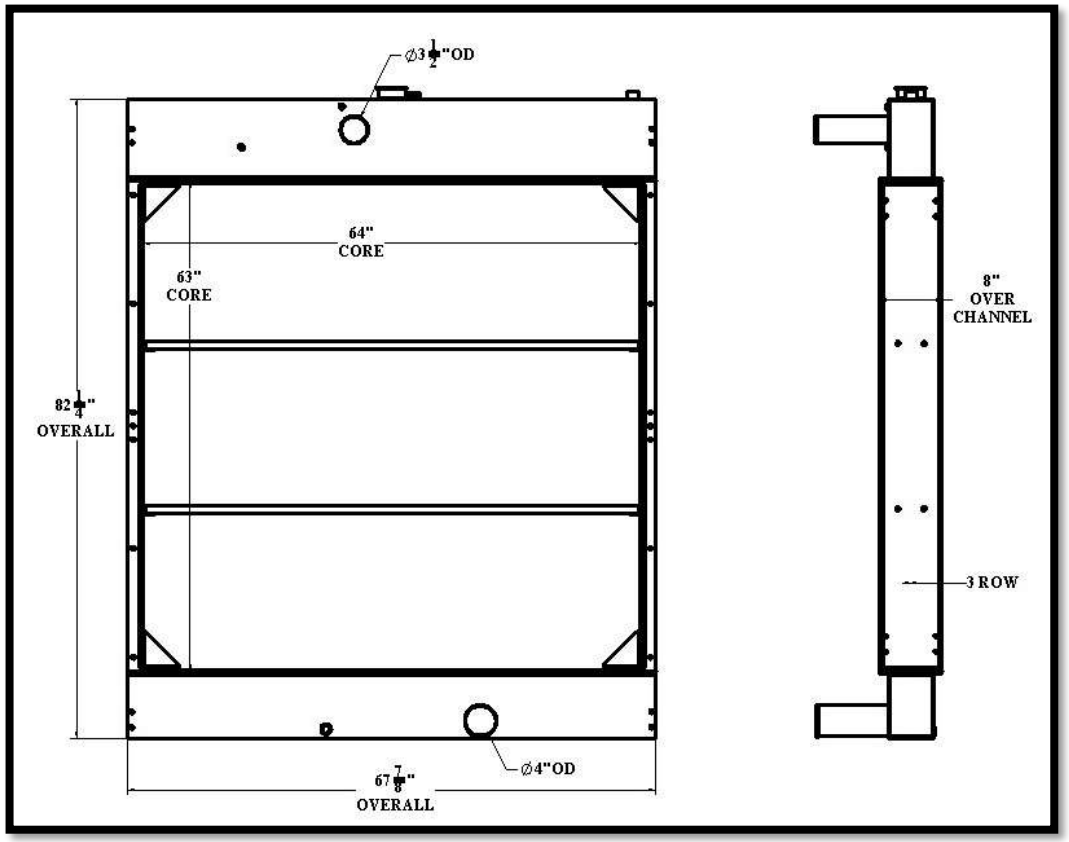

Overall Dimensions: 82-1/4” X 67-7/8” X 8”
Core: 63” X 64” X 3 ROW
Inlet: 3-1/2”OD
Outlet: 4”OD

Tel 1.800.774.2168
www.bgrradiator.com

BGR Part Number: BT-0194-8I
911300

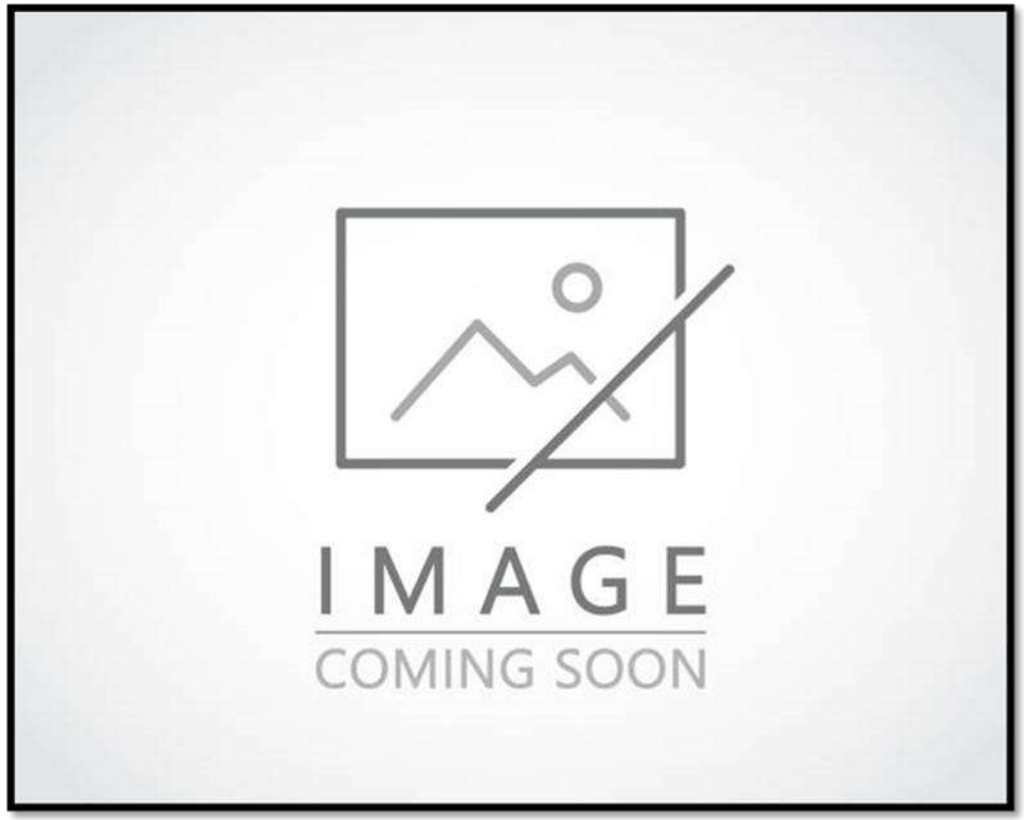

Overall Dimensions:
Core:
Inlet:
Outlet:

Listed dimensions may vary slightly from OE

BGR Part Number: BT-0195-6Y

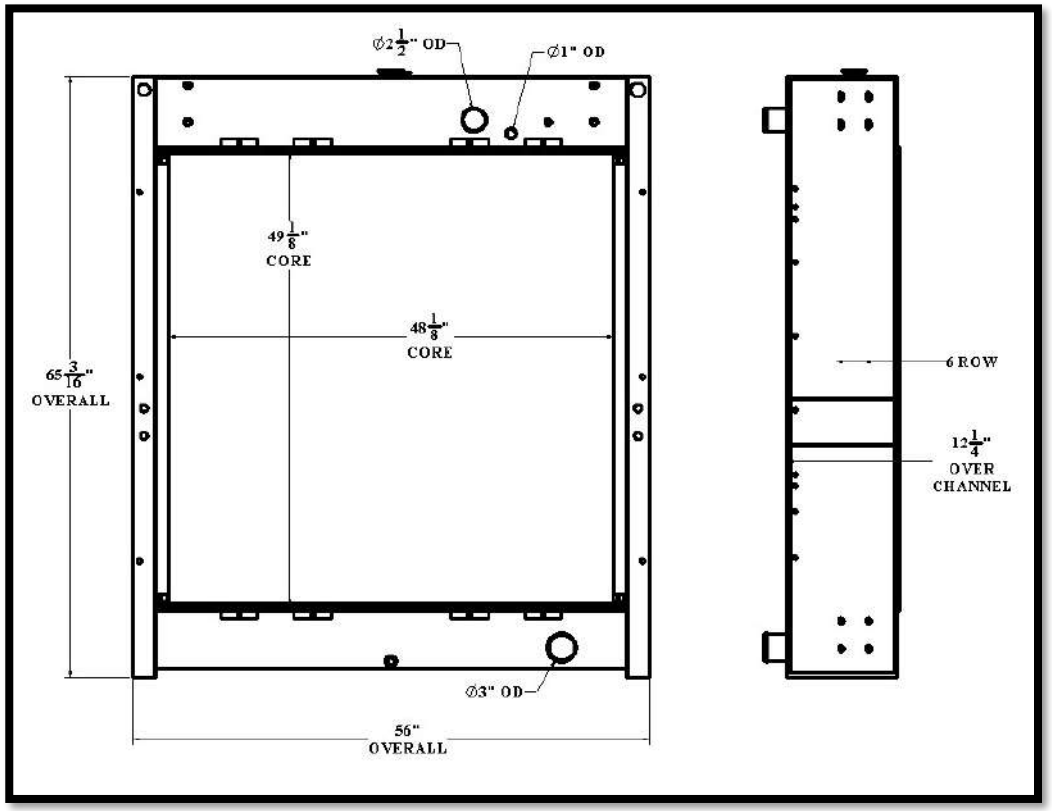

Overall Dimensions: 65-3/16” X 56” X 12-1/4”
Core: 49-1/8” X 48-1/8” X 6 ROW
Inlet: 2-1/2” OD
Outlet: 3” OD

Tel 1.800.774.2168
www.bgrradiator.com

BGR Part Number: BT-0196-8I
56024 / 580

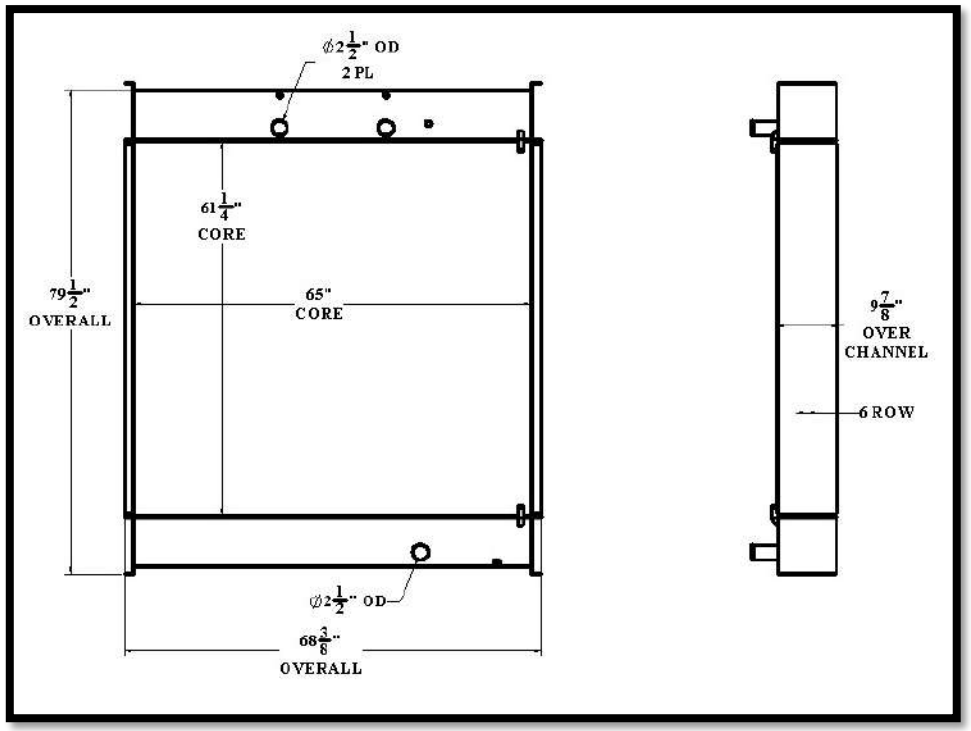

Overall Dimensions: 79-1/2” X 68-3/8” X 9-7/8”
Core: 61-1/4” X 65” X 6 ROW
Inlet: 2-1/2” OD, 2 PL
Outlet: 2-1/2” OD

Listed dimensions may vary slightly from OE

BGR Part Number: BT-0197-6M-NC
CAT 2007010-RA, 427839

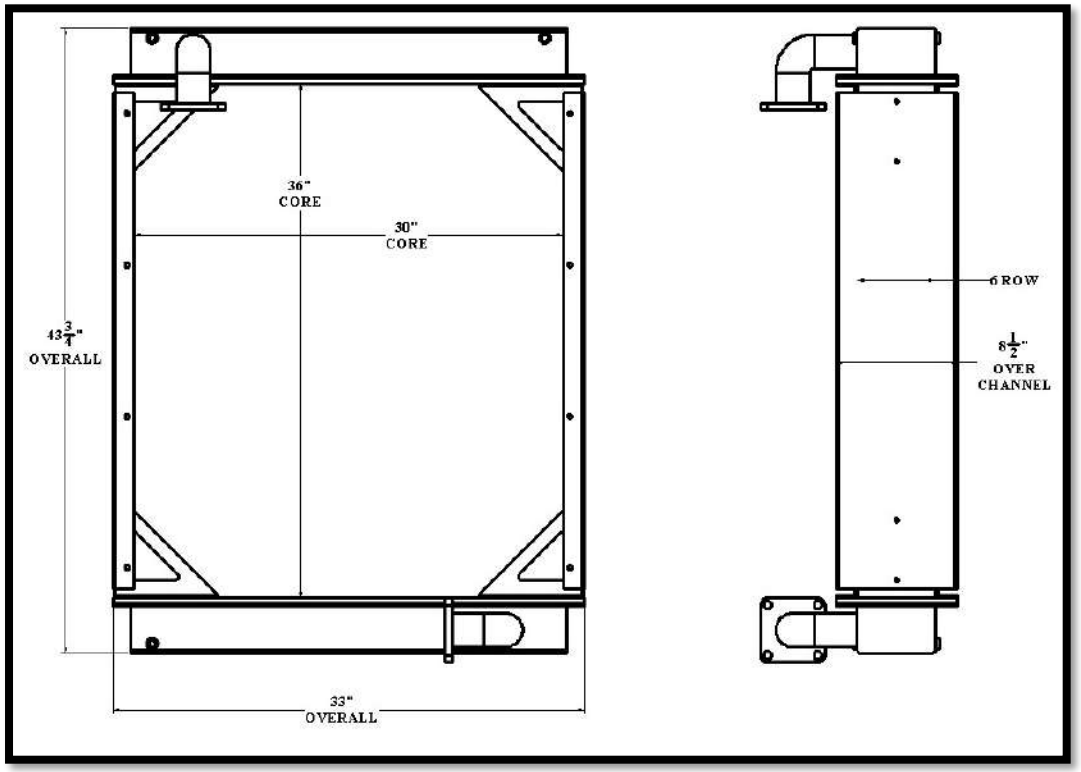

Overall Dimensions: 43-3/4” X 33” X 8-1/2”
Core: 36” X 30” X 6 ROW
Inlet: BOLTED FLANGE
Outlet: BOLTED FLANGE

Tel 1.800.774.2168
www.bgrradiator.com

BGR Part Number: BT-0198-5M
54426

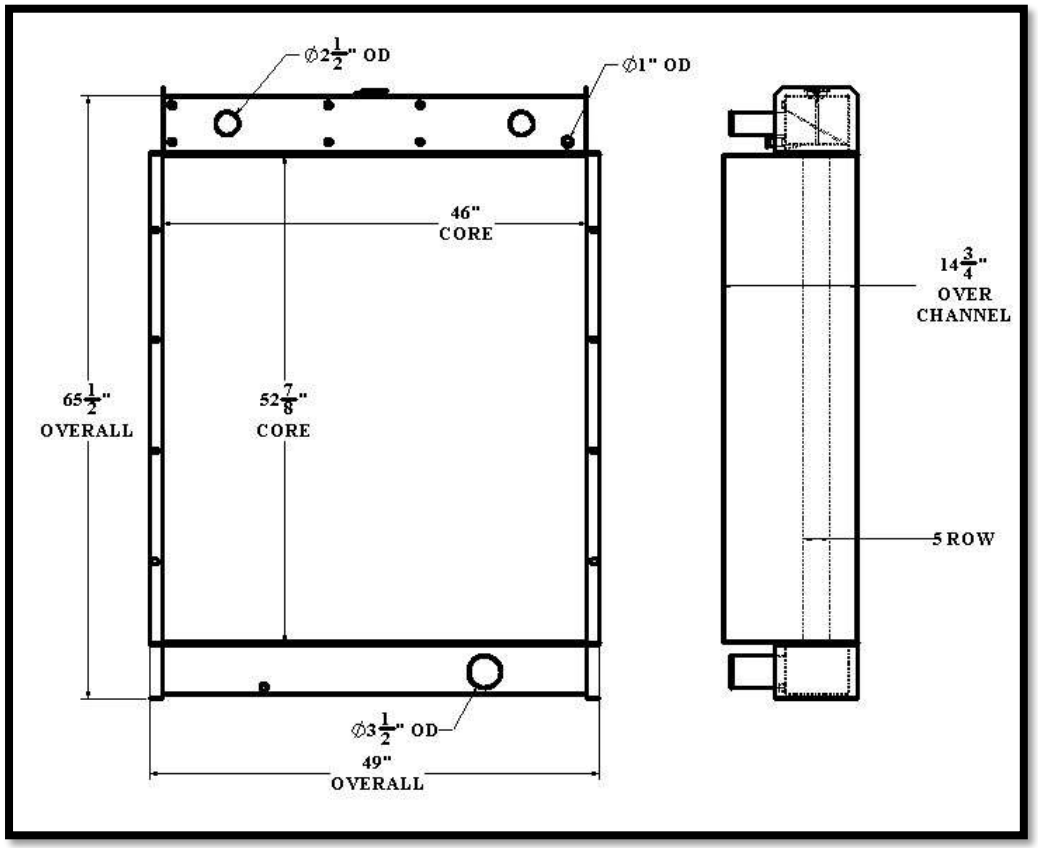

Overall Dimensions: 65-1/2” X 49” X 14-3/4”
Core: 52-7/8” X 46” X 5 ROW
Inlet: 2-1/2” OD, 2 PL
Outlet: 3-1/2” OD

Listed dimensions may vary slightly from OE

BGR Part Number: BT-0199-8I8I

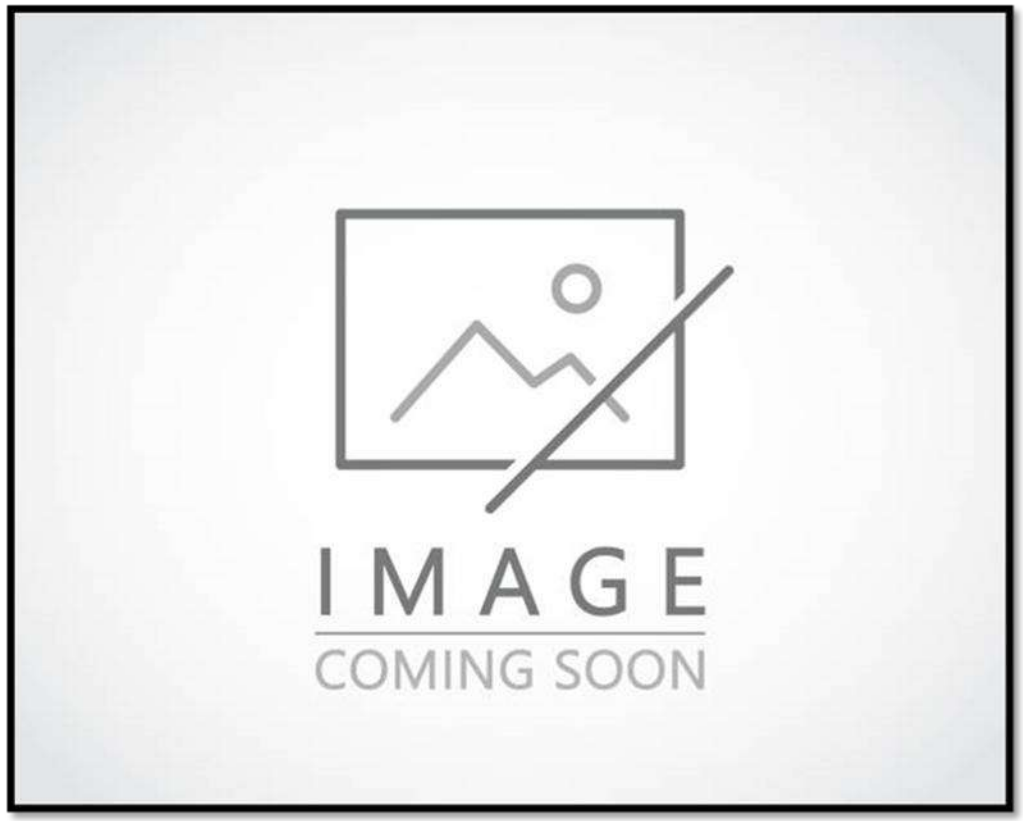

Overall Dimensions:
Core:
Inlet:
Outlet:

Tel 1.800.774.2168
www.bgrradiator.com

BGR Part Number: BT-0200-7I
9127500

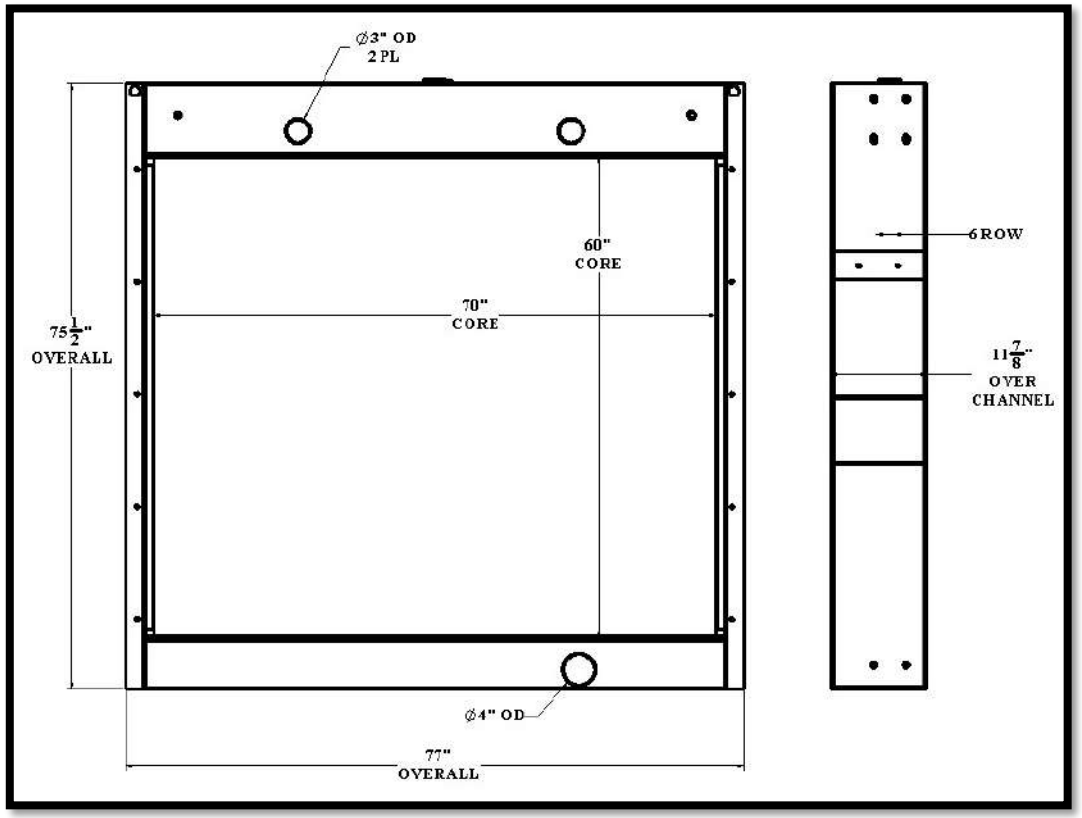

Overall Dimensions: 75-1/2” X 77” X 11-7/8”
Core: 60” X 70” X 6 ROW
Inlet: 3” OD, 2 PL
Outlet: 4” OD

Listed dimensions may vary slightly from OE

BGR Part Number: BT-0201-5I7I

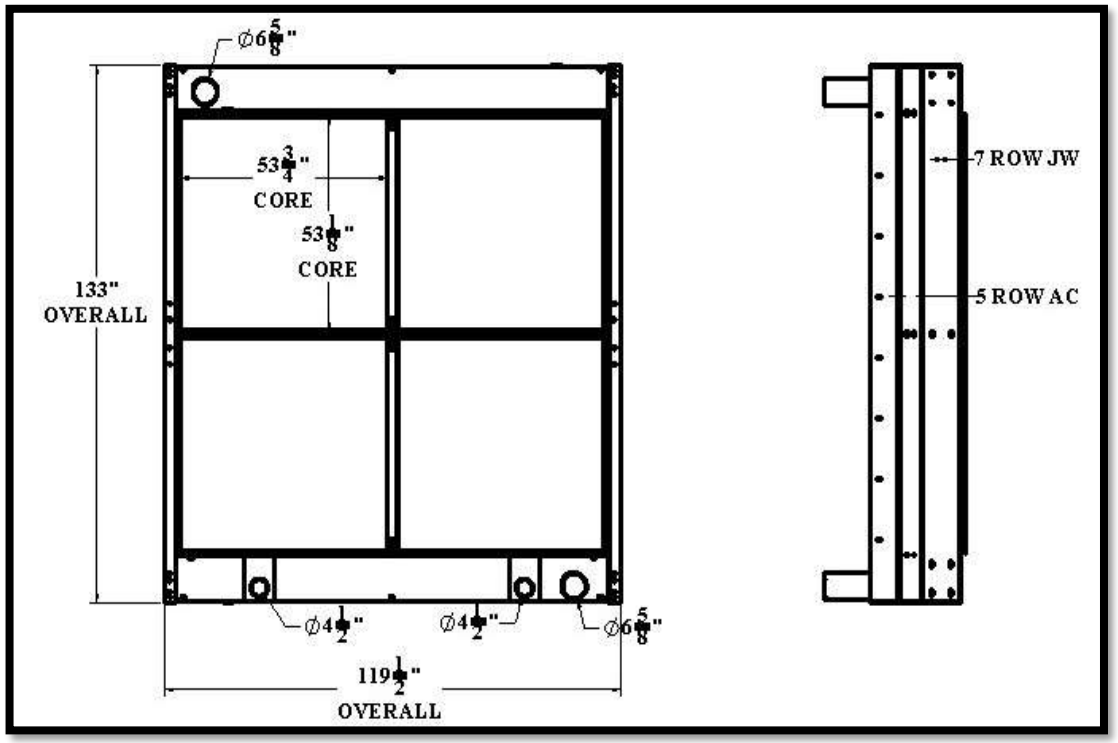

Overall Dimensions: 133” X 119-1/2”
AC Core:53-1/8” X 53-3/4” X 5 ROW
JW CORE: 53-1/8” X 53-3/4” X 7 ROW
AC Inlet/Outlet: 4-1/2”OD
JW Inlet/Outlet: 6-5/8”

Tel 1.800.774.2168
www.bgrradiator.com

BGR Part Number: BT-0202-3



Overall Dimensions
Core:
Inlet:
Outlet:

Listed dimensions may vary slightly from OE

BGR Part Number: BT-0203-6M
204-539

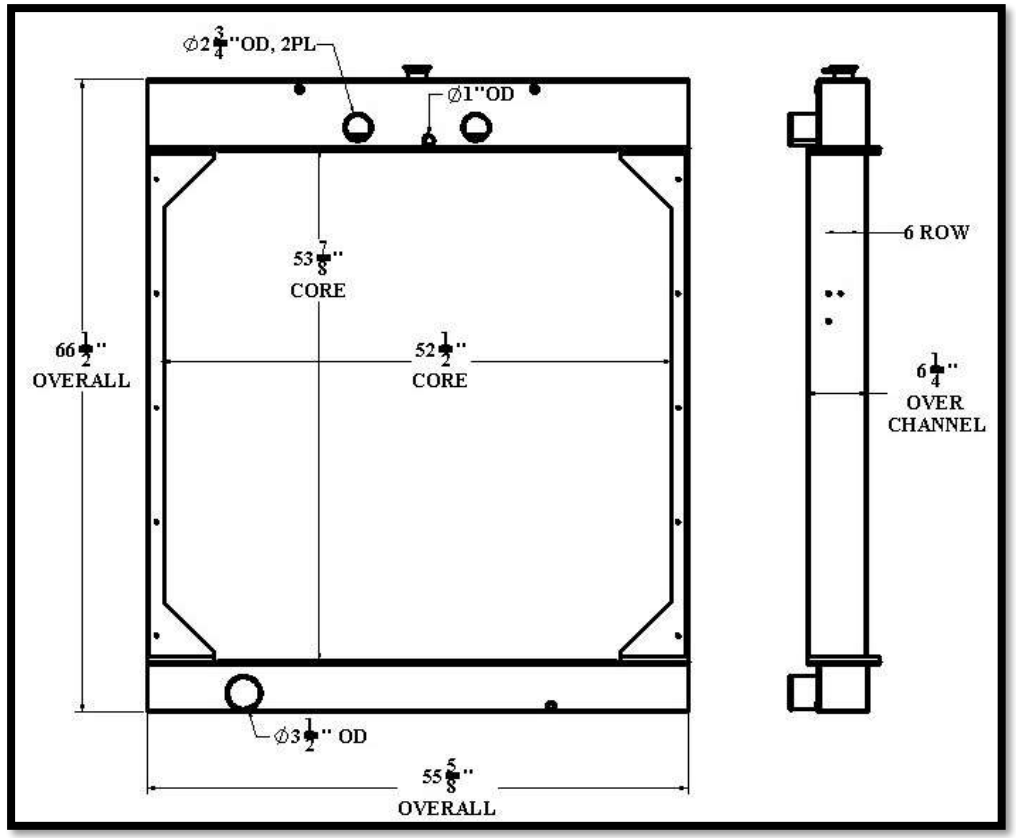

Overall Dimensions: 66-1/2” X 55-5/8” X 6-1/4”
Core: 53-7/8” X 52-1/2” X 6 ROW
Inlet: 2-3/4”OD 2PL, 1”OD
Outlet: 3-1/2”OD

Tel 1.800.774.2168
www.bgrradiator.com

BGR Part Number: BT-0204-7M\
120-082, 55373749560

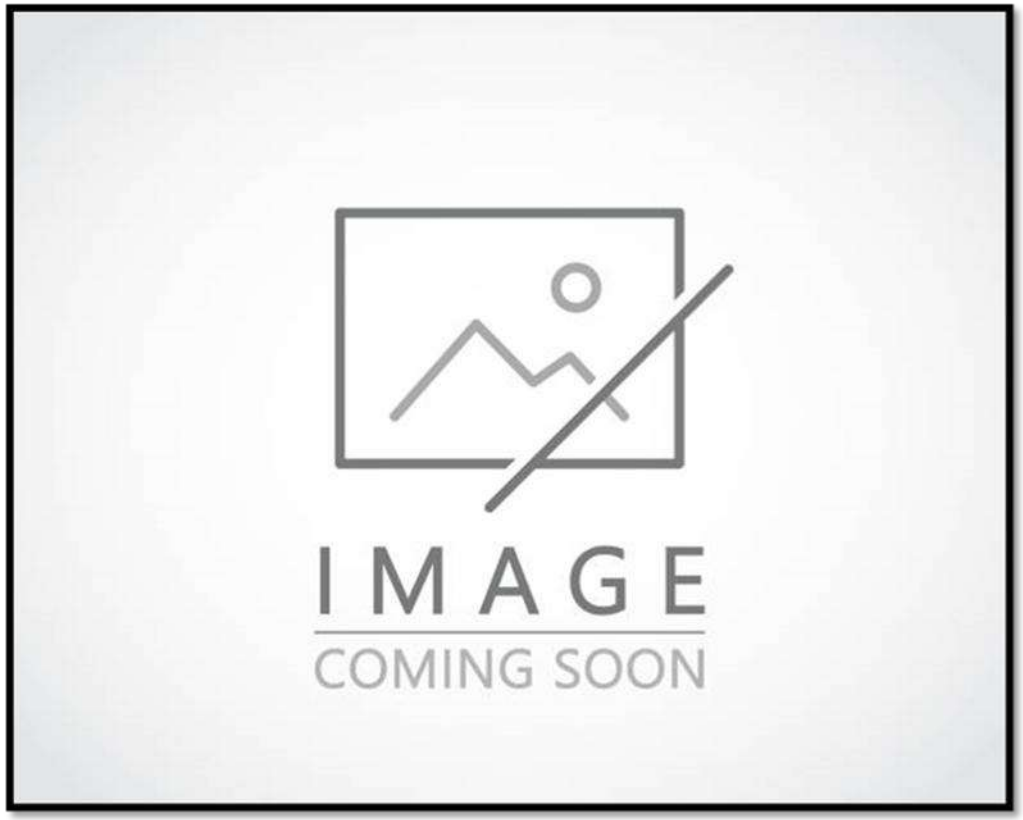

Overall Dimensions:
Core:
Inlet:
Outlet:

Listed dimensions may vary slightly from OE

BGR Part Number: BT-0205-6I
7C-4404

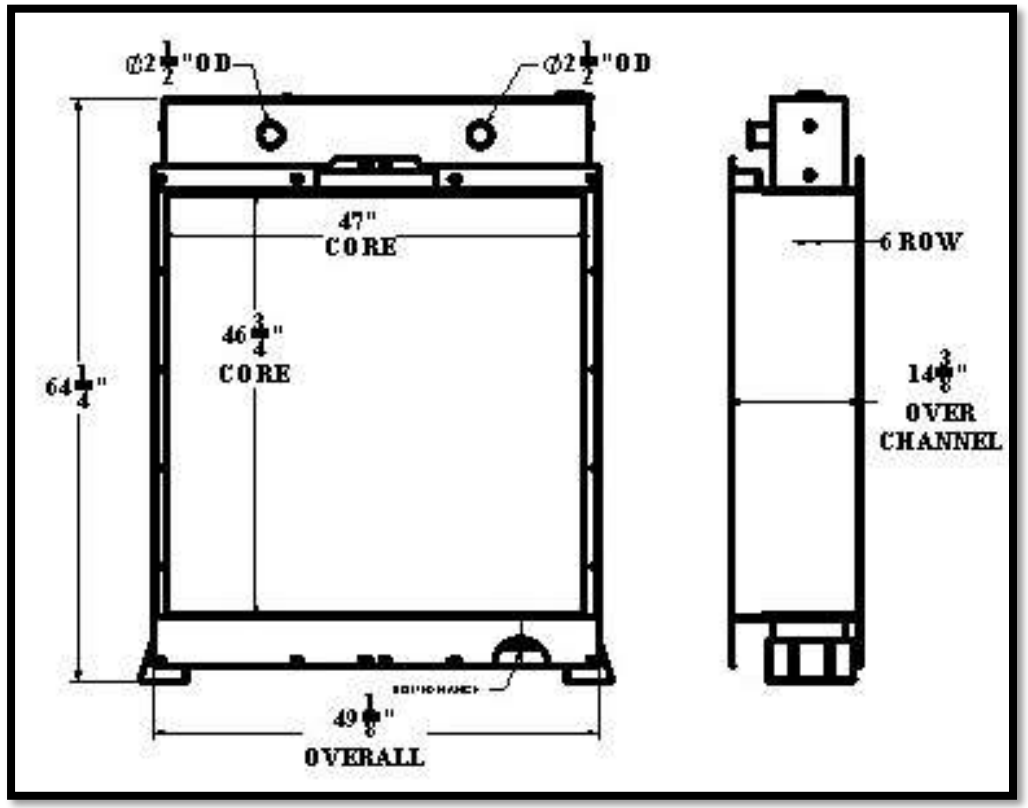

Overall Dimensions: 64-1/2” X 49-1/8” 14-3/8”
Core: 46-3/4” X 47” X 6 ROW
Inlet: 2-1/2”OD, 2PL
Outlet: BOLTED FLANGE

Tel 1.800.774.2168
www.bgrradiator.com

BGR Part Number: BT-0206-4I3I
A-354965

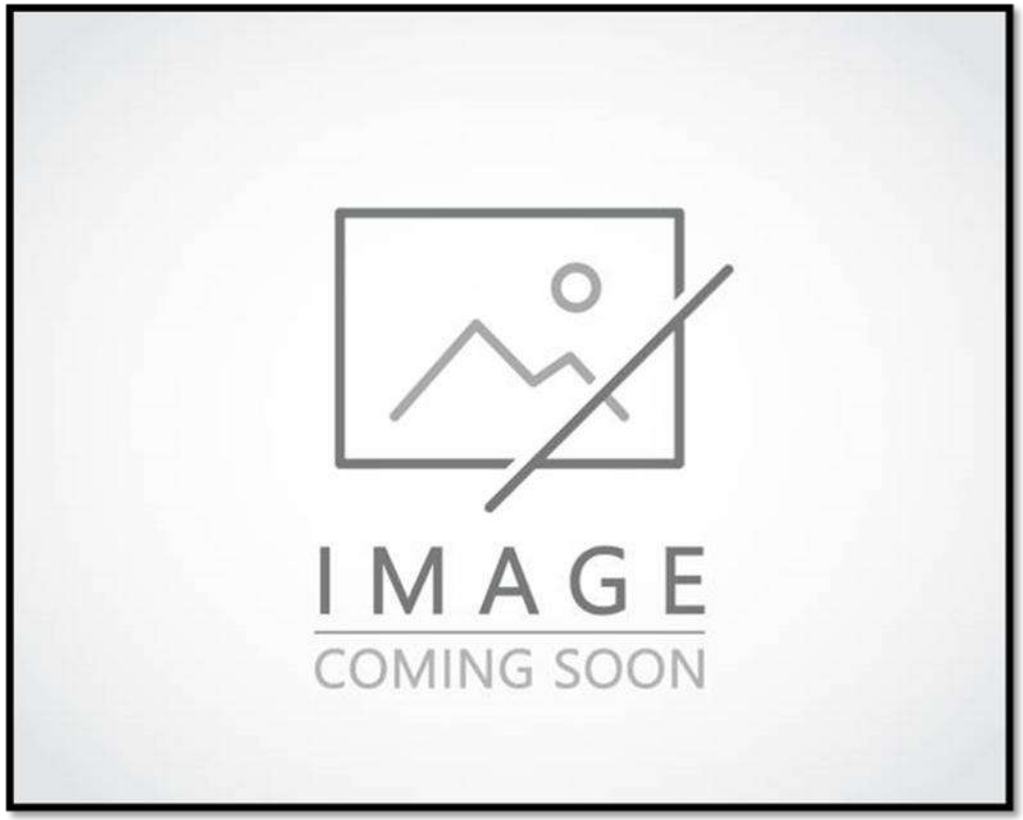

Overall Dimensions:
Core:
Inlet:
Outlet:

Listed dimensions may vary slightly from OE

BGR Part Number: BT-0207-6I
A-354539, 1A17742

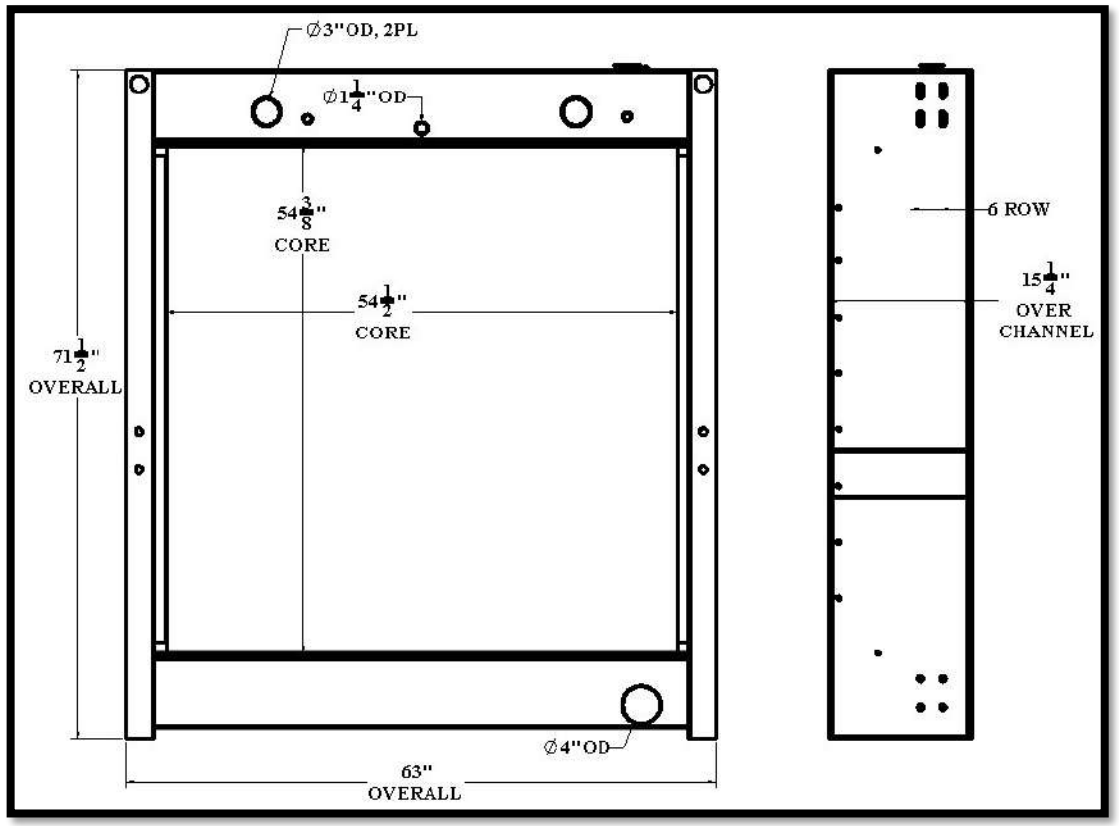

Overall Dimensions: 71-1/2” X 63” X 15-1/4”
Core: 54-3/8” X 54-1/2” X 6 ROW
Inlet: 3”OD 2PL, 1-1/4”OD
Outlet: 4”OD

Tel 1.800.774.2168
www.bgrradiator.com

BGR Part Number: BT-0208-5I
130-2862

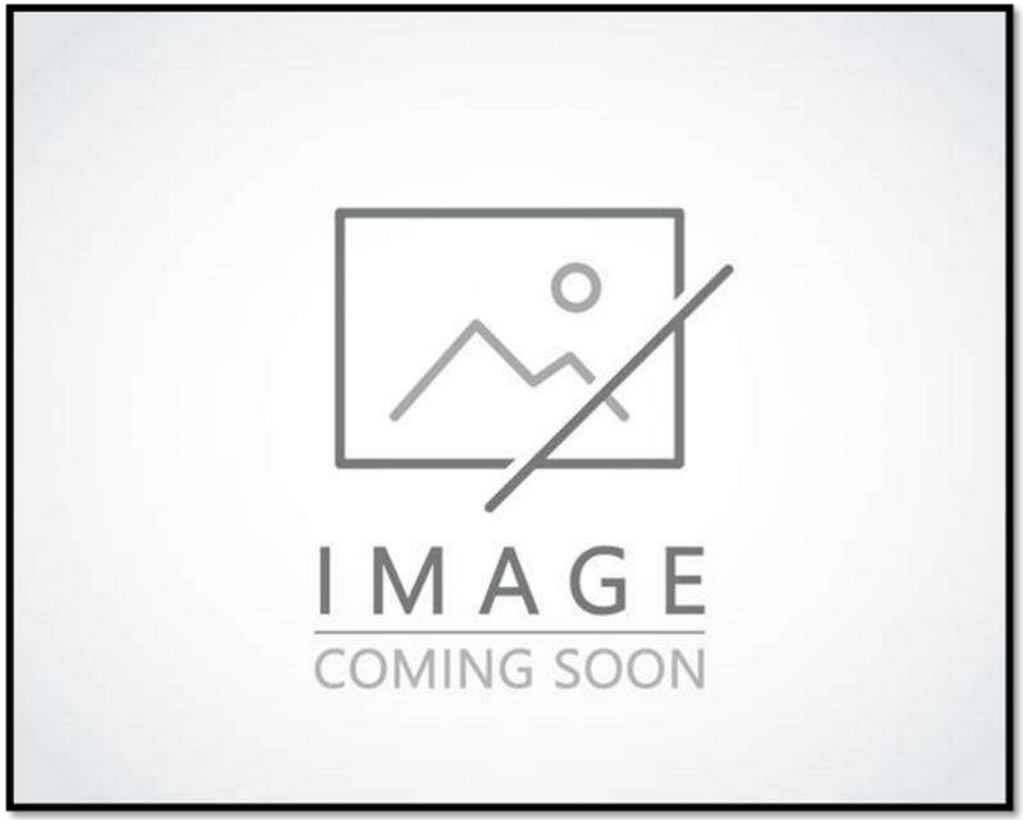

Overall Dimensions:
Core:
Inlet:
Outlet:

Listed dimensions may vary slightly from OE

BGR Part Number: BT-0209-6T
OE: A034C812

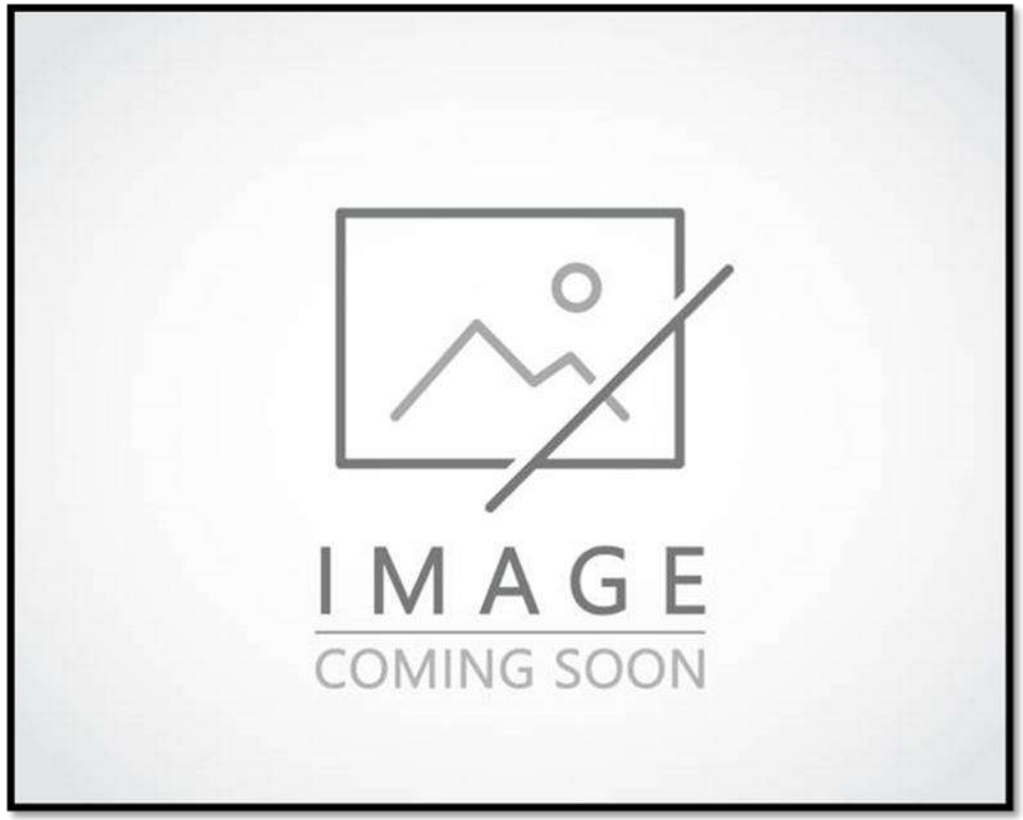

Overall Dimensions:
Core:
Inlet:
Outlet:

Tel 1.800.774.2168
www.bgrradiator.com

BGR Part Number: BT-0210-4T

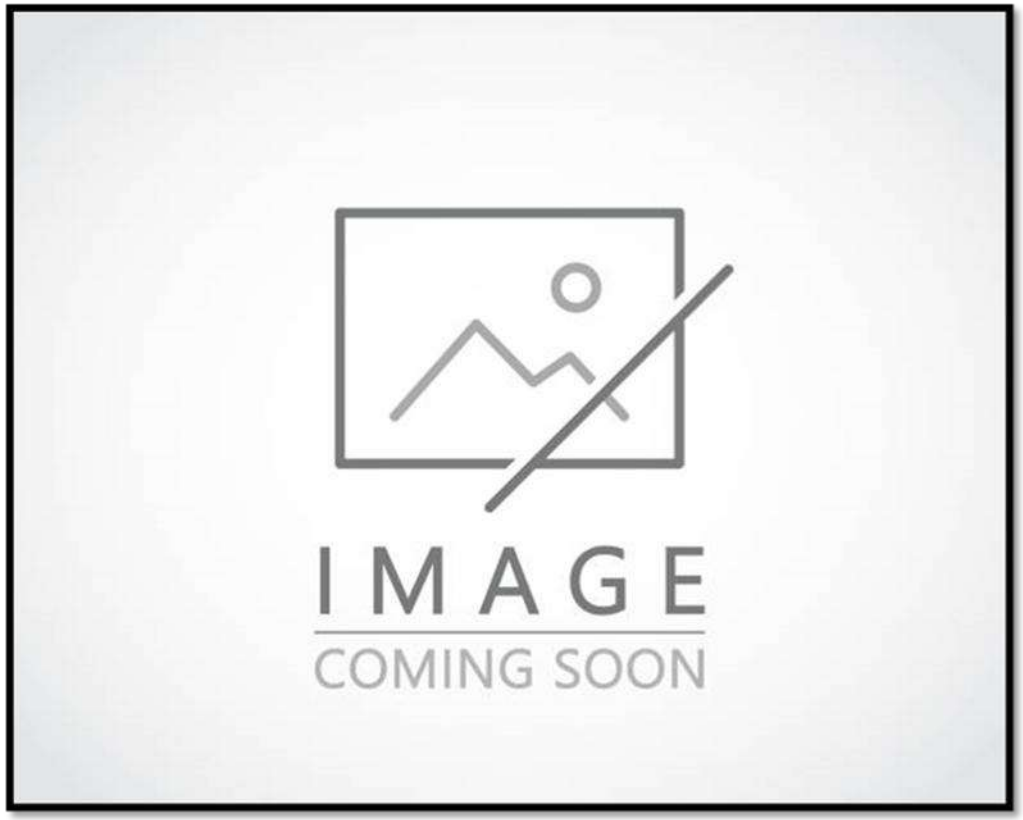

Overall Dimensions:
Core:
Inlet:
Outlet:

Listed dimensions may vary slightly from OE

BGR Part Number: BT-0211-6T
130-4436

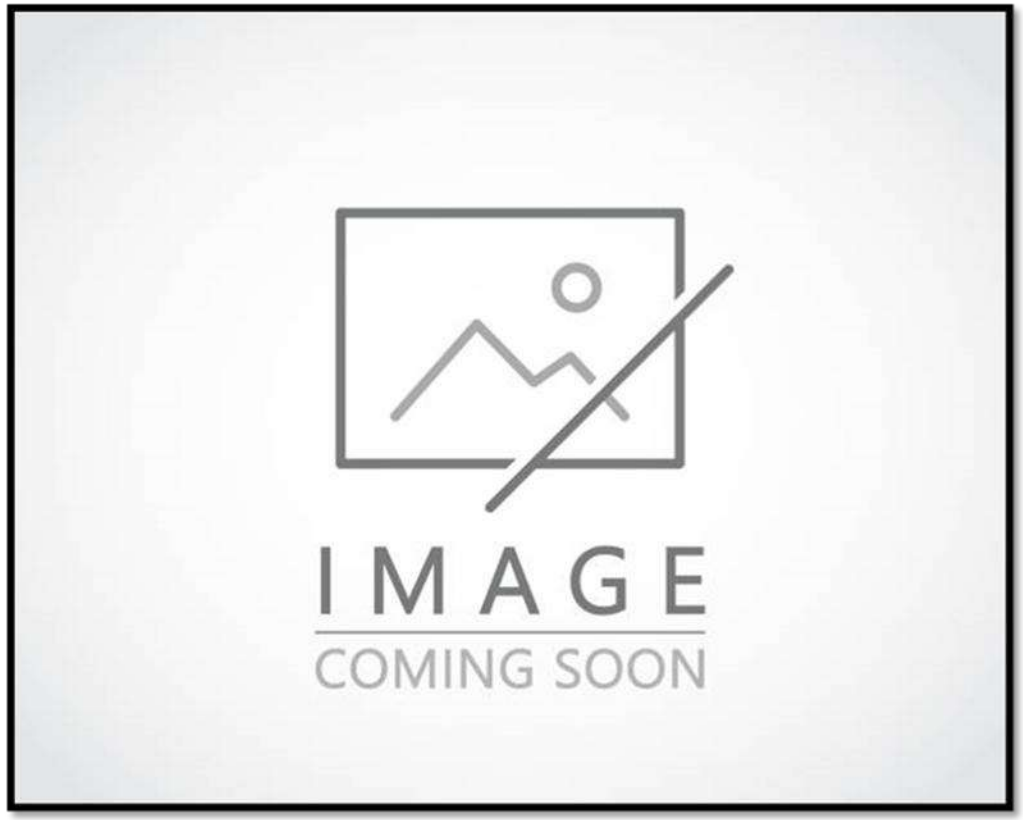

Overall Dimensions:
Core:
Inlet:
Outlet:

Tel 1.800.774.2168
www.bgrradiator.com

BGR Part Number: BT-0212-7M

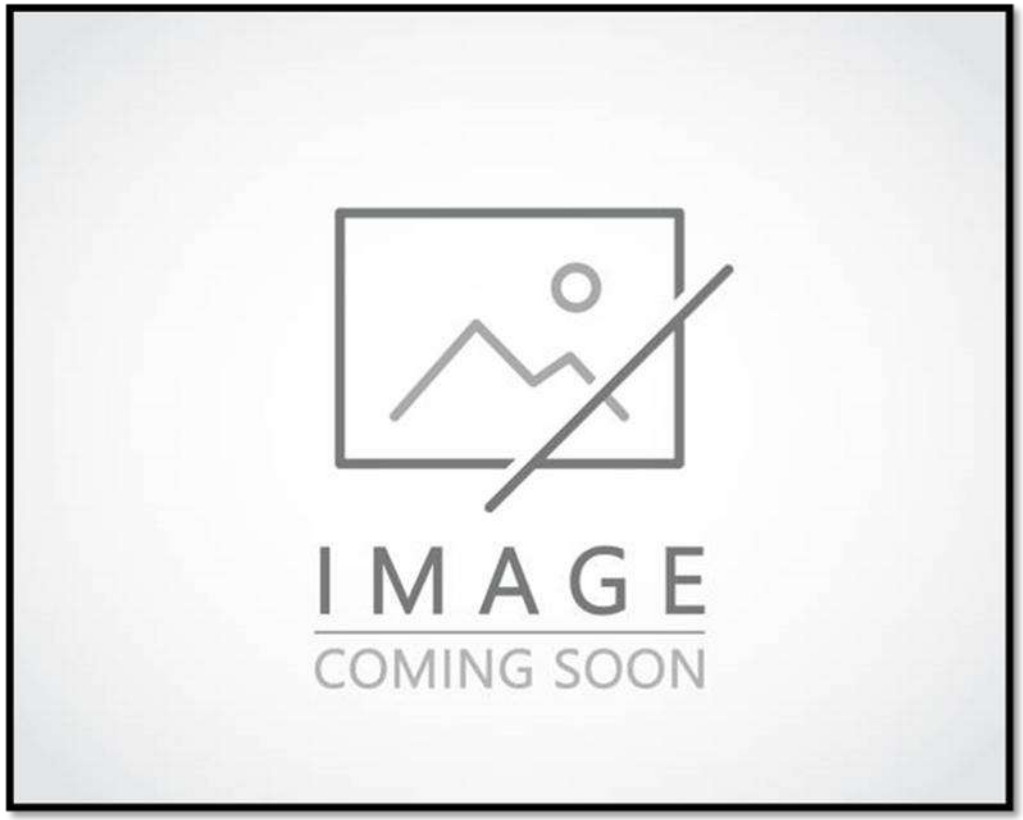

Overall Dimensions:
Core:
Inlet:
Outlet:

Listed dimensions may vary slightly from OE

BGR Part Number: BT-0213-7I7I

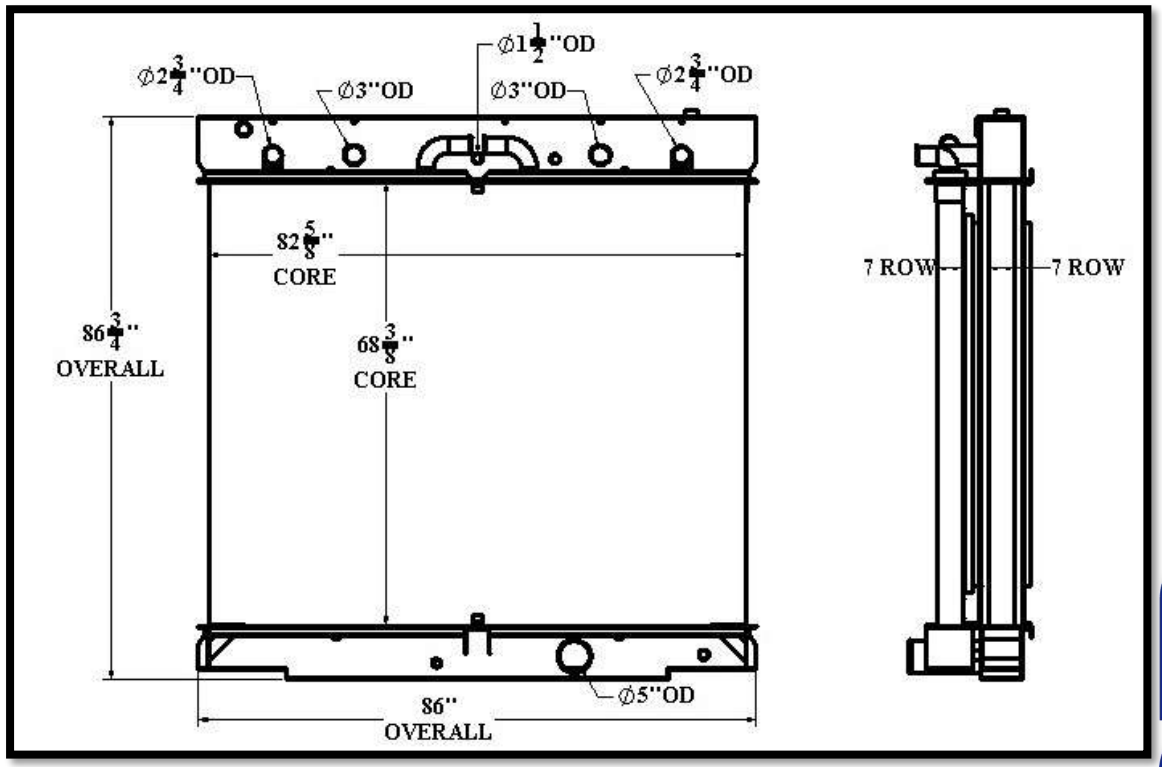

Overall Dimensions: 86-3/4” X 86”
AC Core: 82-5/5” X 68-3/8” X 7 ROW
JW Core: 82-5/5” X 68-3/8” X 7 ROW
AC Inlet/Outlet: 2-3/4”OD 2PL
JW Inlet: 3”OD 2PL, 1-1/2”OD
JW Outlet:5”OD

Tel 1.800.774.2168
www.bgrradiator.com

BGR Part Number: BT-0214-6T

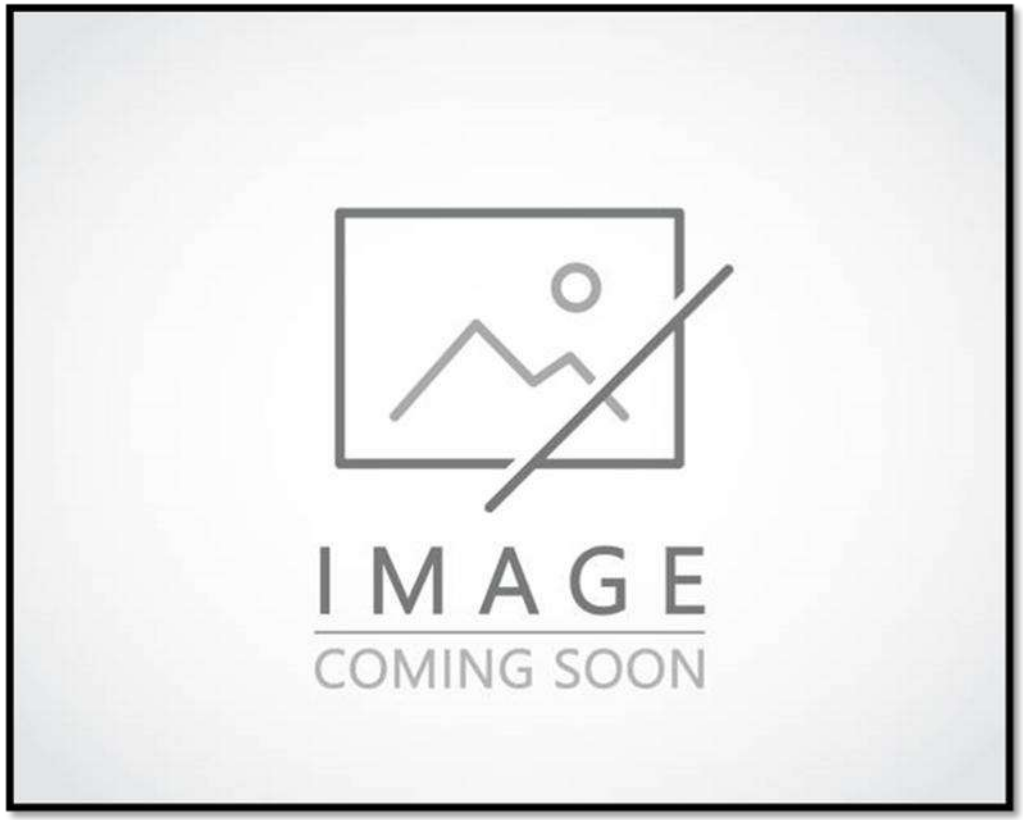

Overall Dimensions:
Core:
Inlet:
Outlet:

Listed dimensions may vary slightly from OE

BGR Part Number: BT-0215-4I
120-082

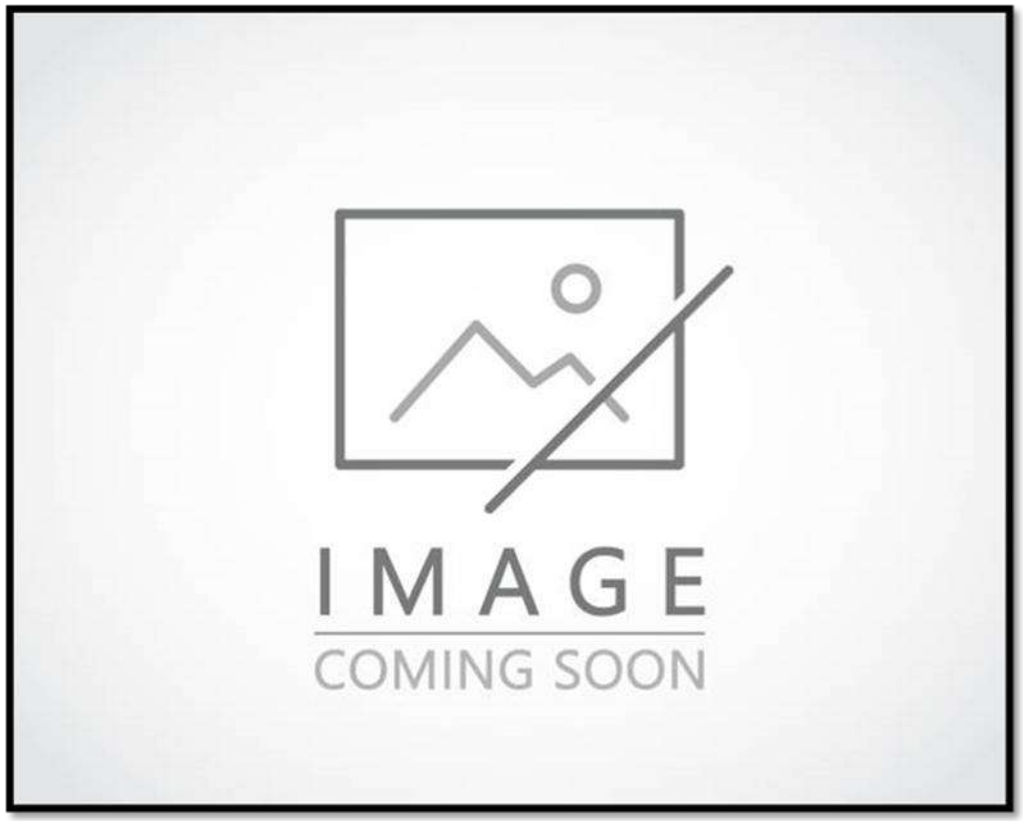

Overall Dimensions:
Core:
Inlet:
Outlet:

Tel 1.800.774.2168
www.bgrradiator.com

BGR Part Number: BT-0216-6M
SUA9453, SUA82566

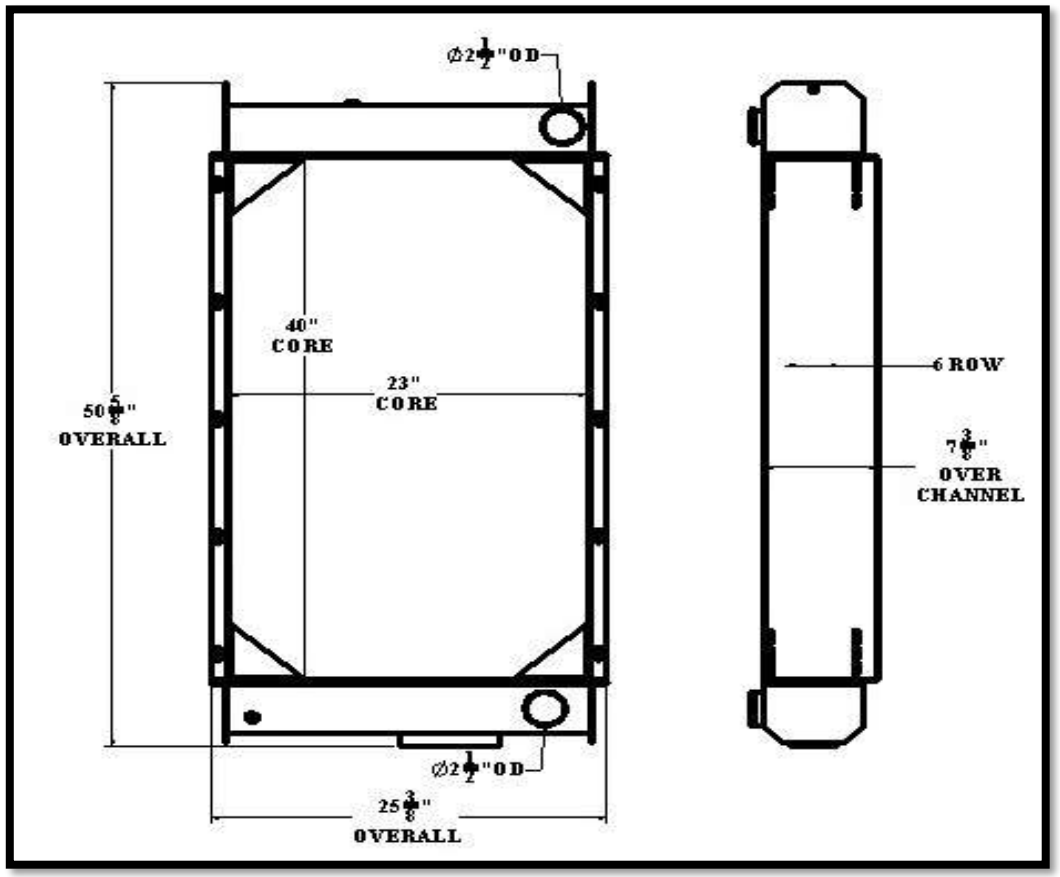

Overall Dimensions: 50-5/8” X 25-3/8” X 7-3/8”
Core: 40” X 23” X 6 ROW
Inlet: 2-1/2”OD
Outlet: 2-1/2”OD

Listed dimensions may vary slightly from OE

BGR Part Number: BT-0217-5T

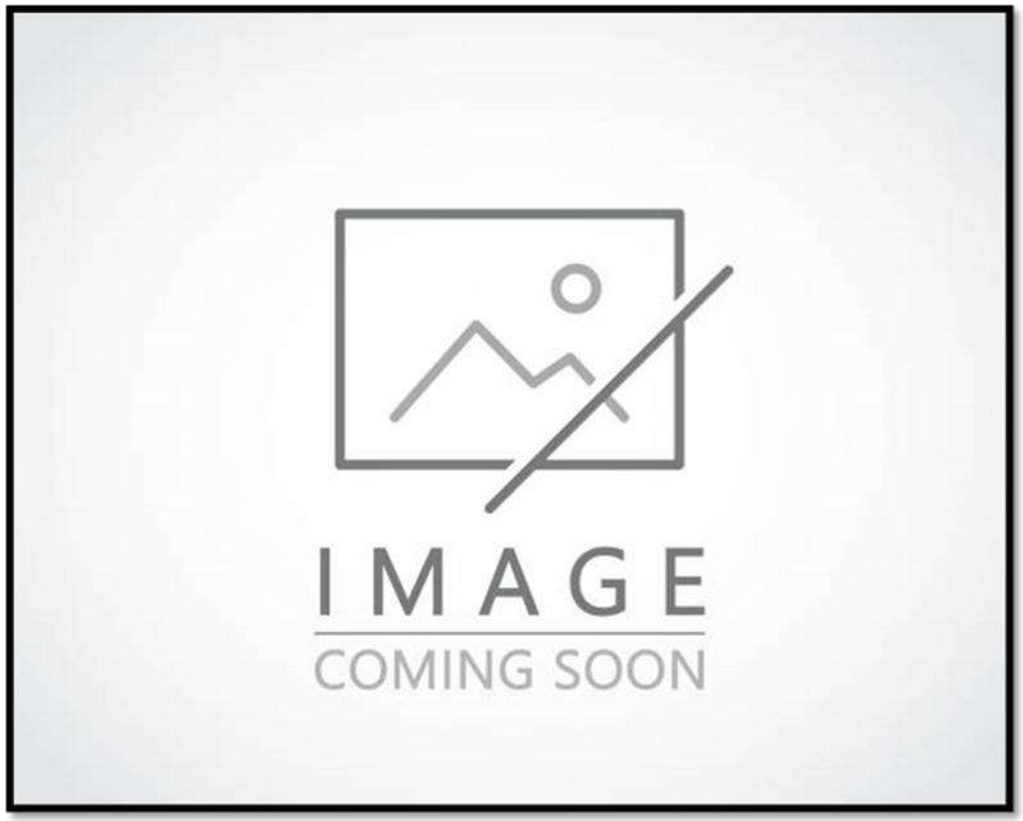

Overall Dimensions:
Core:
Inlet:
Outlet:

Tel 1.800.774.2168
www.bgrradiator.com

BGR Part Number: BT-0218-5T
34598, 53071A 4PA

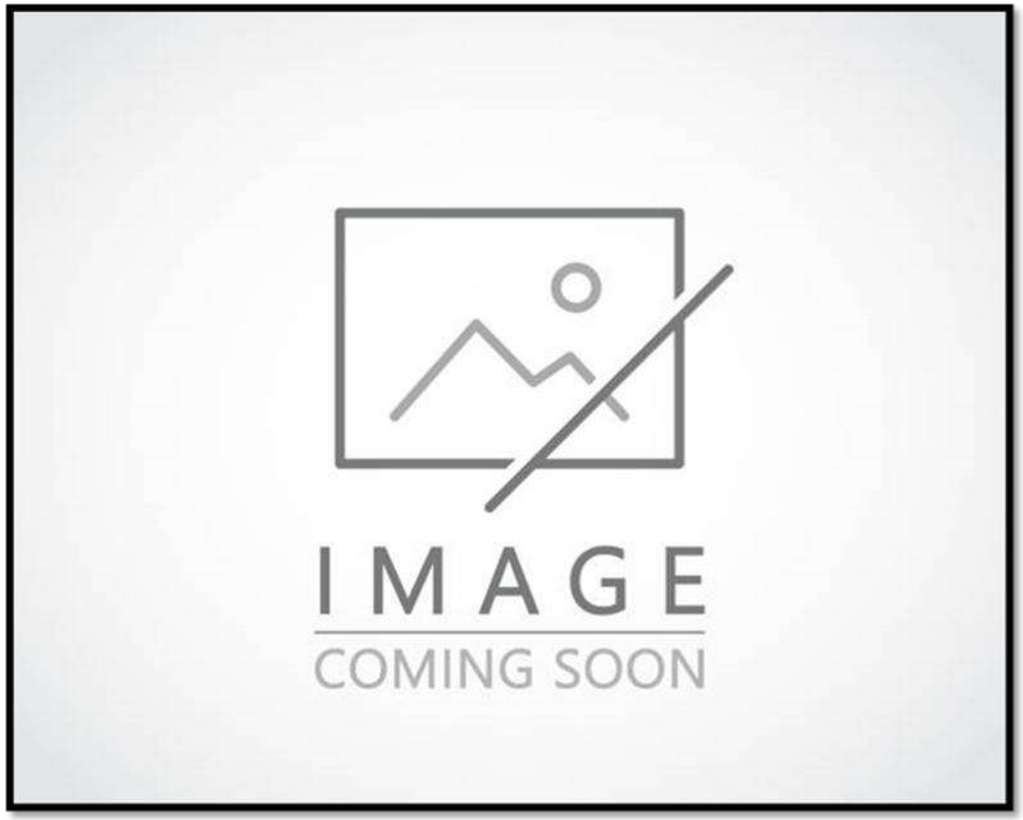

Overall Dimensions:
Core:
Inlet:
Outlet:

Listed dimensions may vary slightly from OE

BGR Part Number: BT-0219-7I

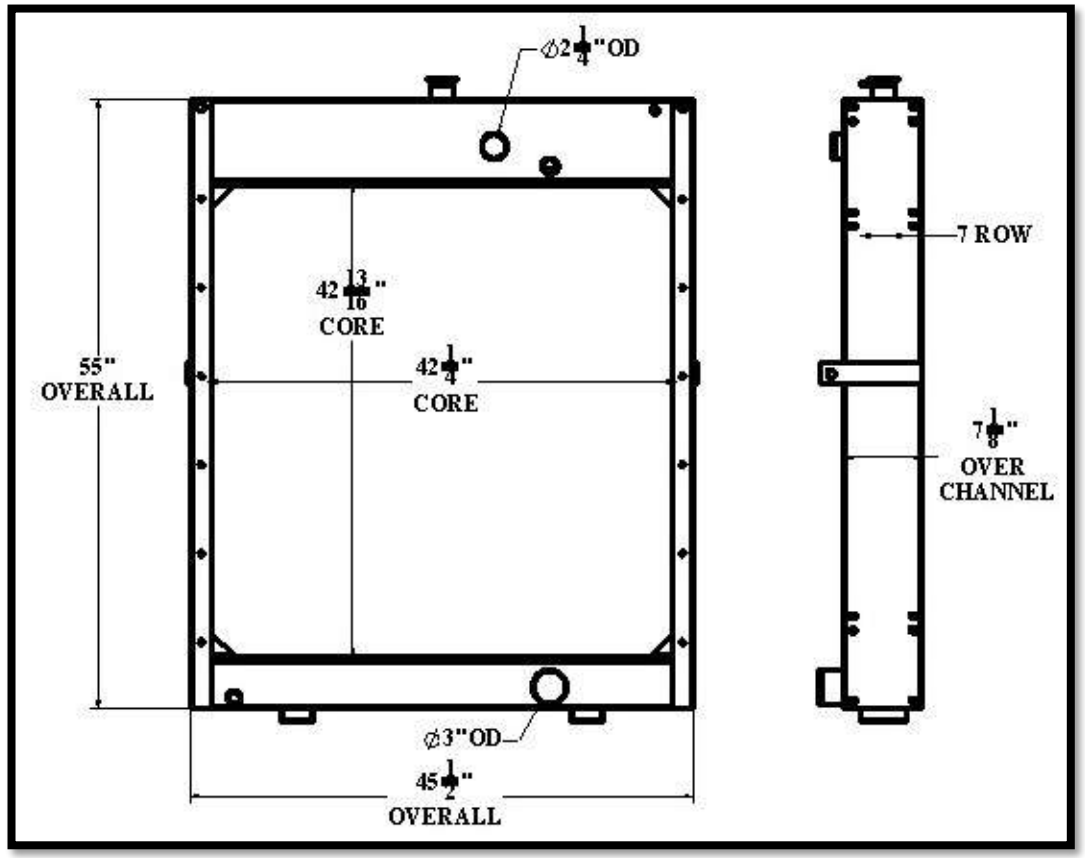

Overall Dimensions: 55” X 45-1/2” X 7-1/8”
Core: 42-13/16” X 42-1/4” X 7 ROW
Inlet: 2-1/4”OD
Outlet: 3”OD

Tel 1.800.774.2168
www.bgrradiator.com

BGR Part Number: BT-0220-6M
130-3195-02

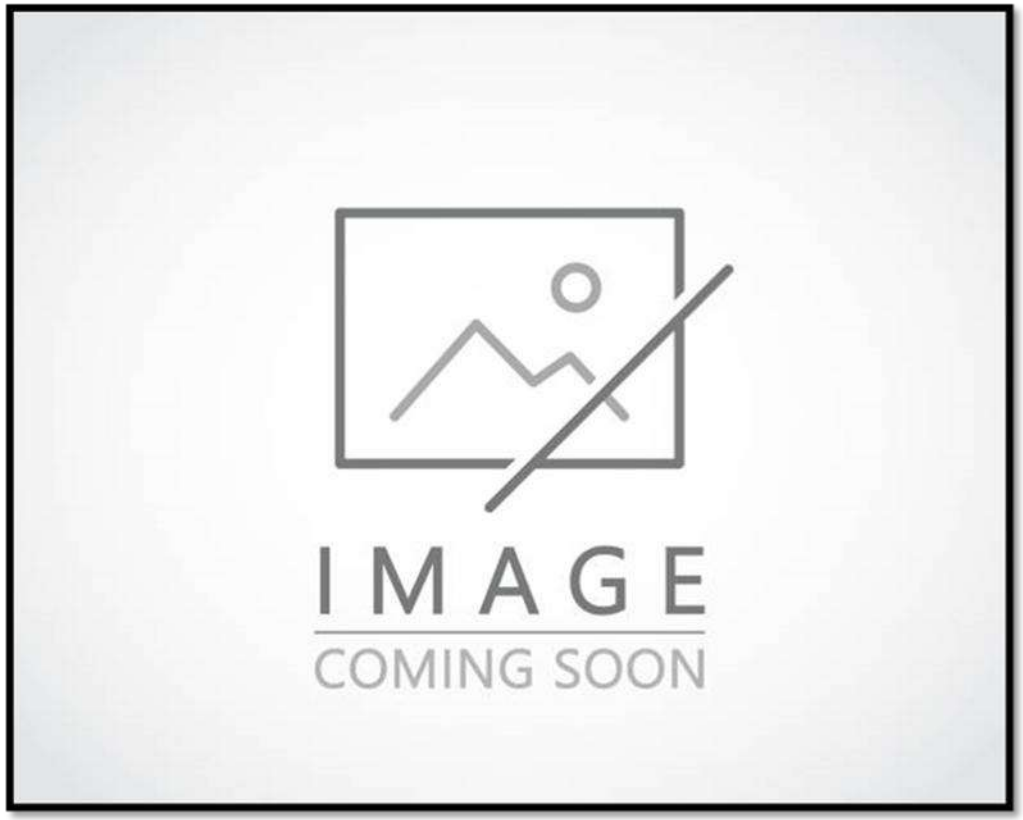

Overall Dimensions:
Core:
Inlet:
Outlet:

Listed dimensions may vary slightly from OE

BGR Part Number: BT-0221-7T
330870

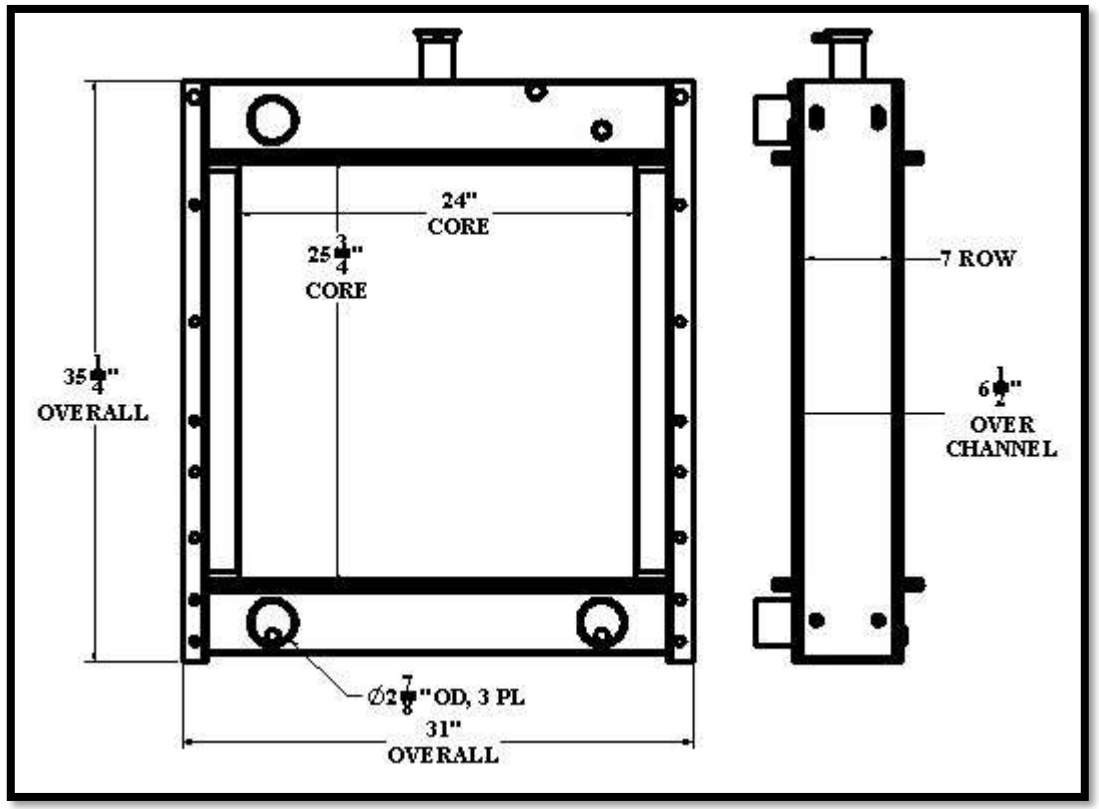

Overall Dimensions: 35-1/4” X 31” X 6-1/2”
Core: 25-3/4” X 24” X 7 ROW
Inlet:2-7/8”OD
Outlet:2-7/8”OD 2PL

Tel 1.800.774.2168
www.bgrradiator.com

BGR Part Number: BT-0222-8I
R227788

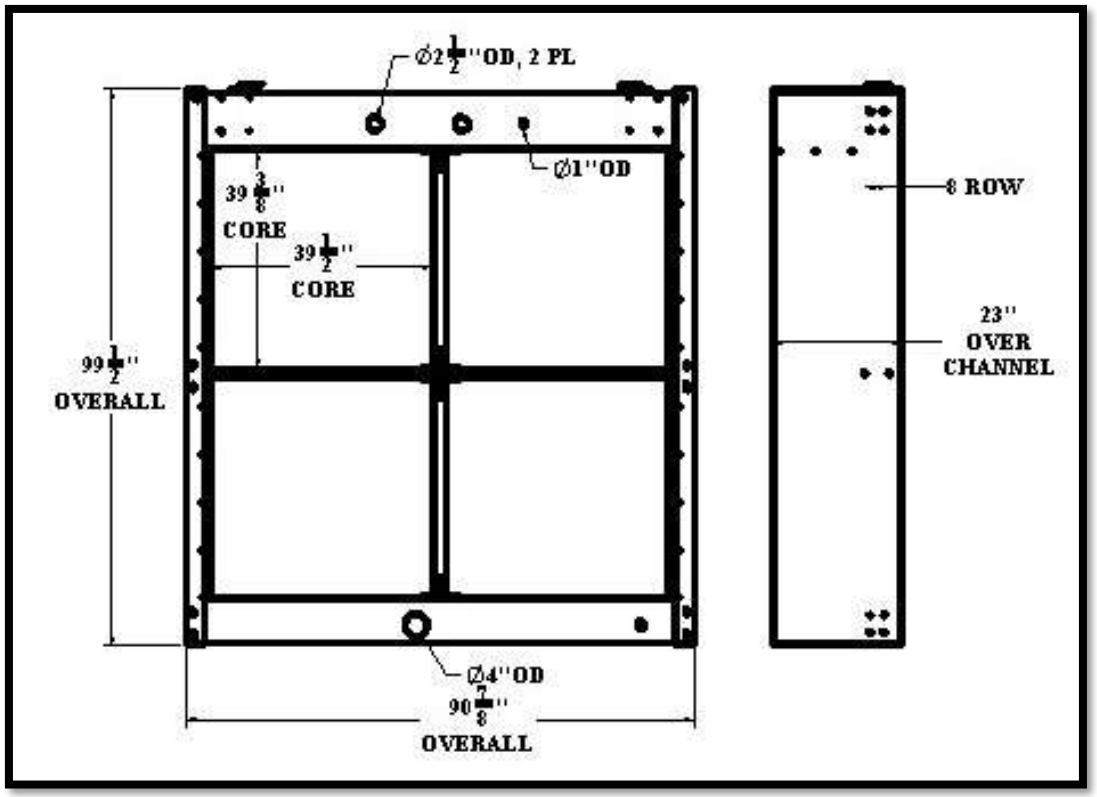

Overall Dimensions: 99-1/2” X 90-7/8” X 23”
Core: 39-3/8” X 39-1/2” X 8 ROW
Inlet: 2-1/2”OD 2PL, 1”OD
Outlet: 4”OD

Listed dimensions may vary slightly from OE

BGR Part Number: BT-0223-4M
120-453, 56251.560.1197

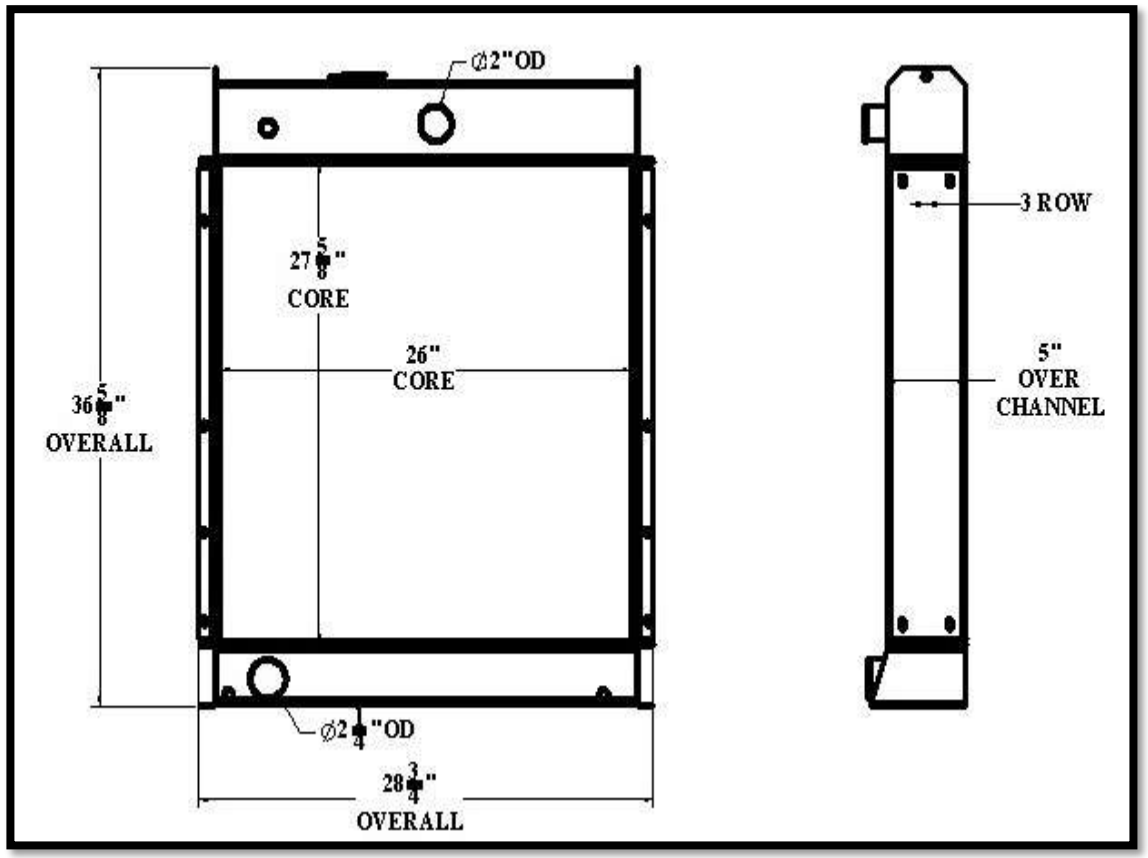

Overall Dimensions: 36-5/8” X 28-3/4” X 5”
Core: 24-5/8” X 26” X 3 ROW
Inlet: 2”OD
Outlet:2-1/4”OD

Tel 1.800.774.2168
www.bgrradiator.com

BGR Part Number: BT-0224-6T
3A46880D

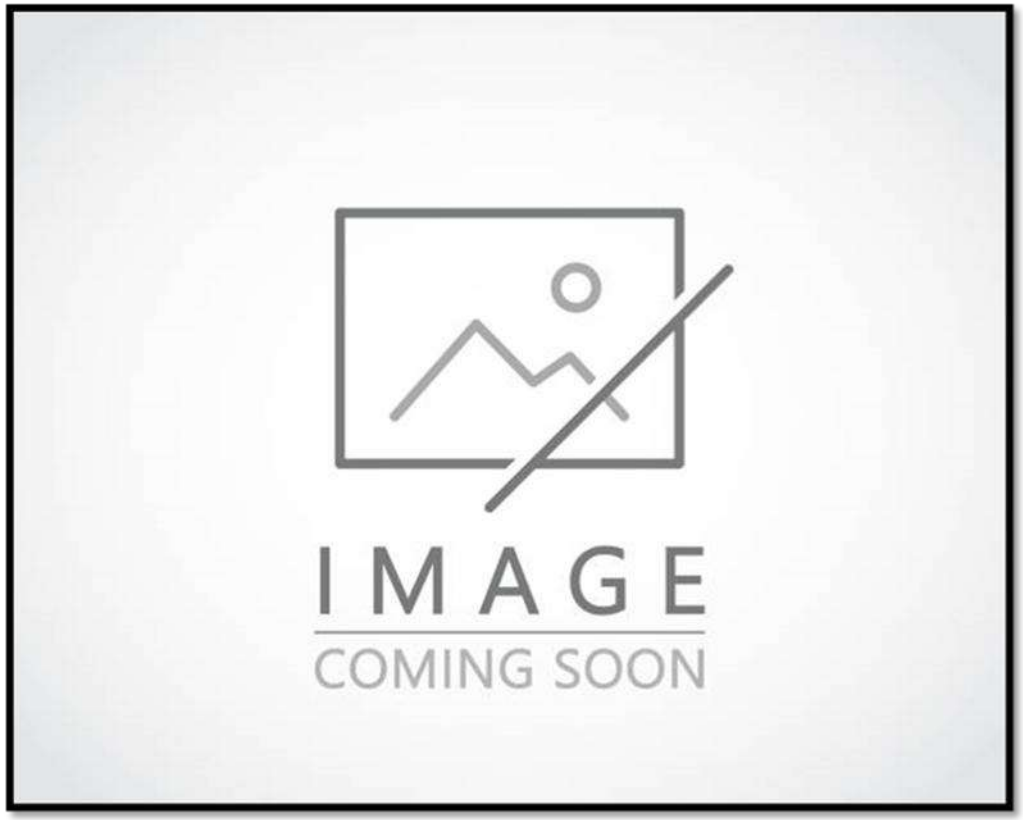

Overall Dimensions:
Core:
Inlet:
Outlet:

Listed dimensions may vary slightly from OE

BGR Part Number: BT-0225-6T
R35483

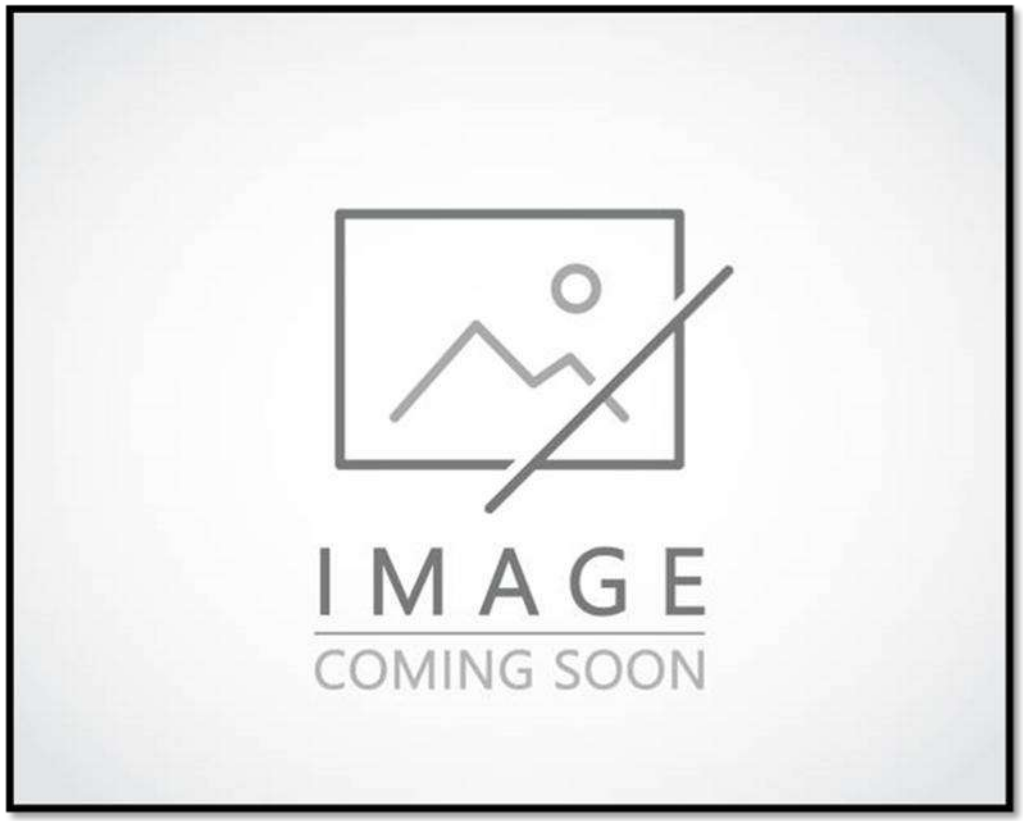

Overall Dimensions:
Core:
Inlet:
Outlet:

Tel 1.800.774.2168
www.bgrradiator.com

BGR Part Number: BT-0226-6M
4N-2593, 465-5072

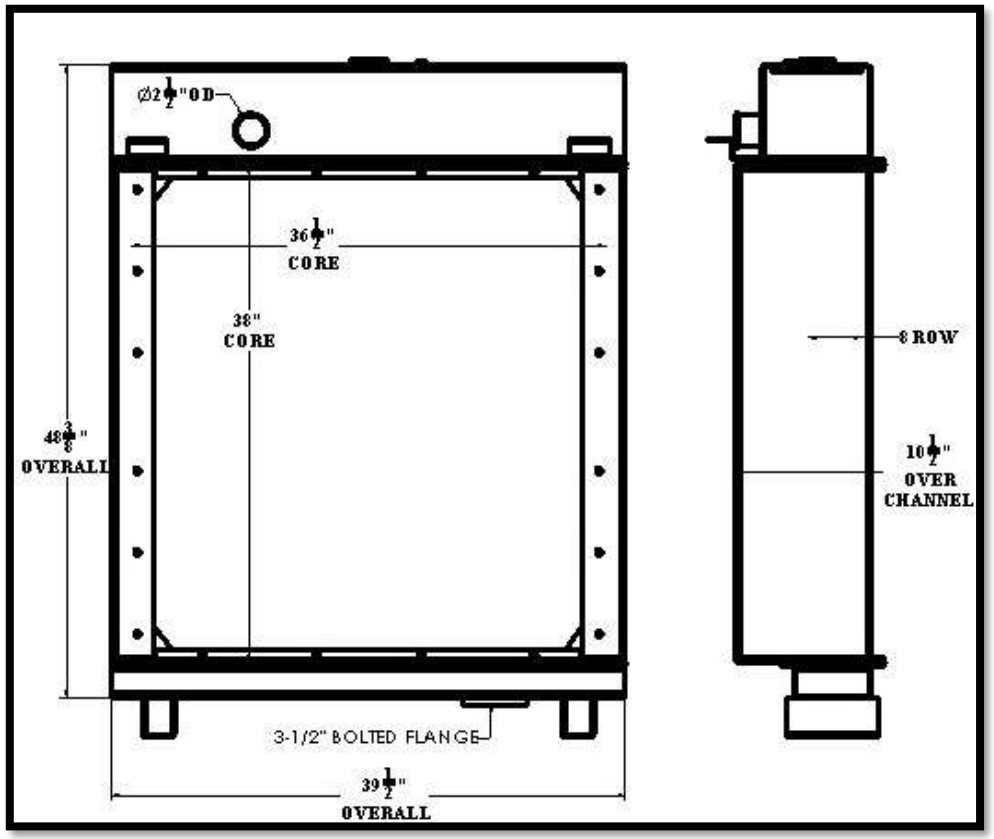

Overall Dimensions: 48-3/8” X 39-1/2” X 10-1/2”
Core: 38” X 36-1/2” X 8 ROW
Inlet: 2-1/2”OD
Outlet: 3-1/2” BOLTED FLANGE

Listed dimensions may vary slightly from OE

BGR Part Number: BT-0227-6M
SUA70697

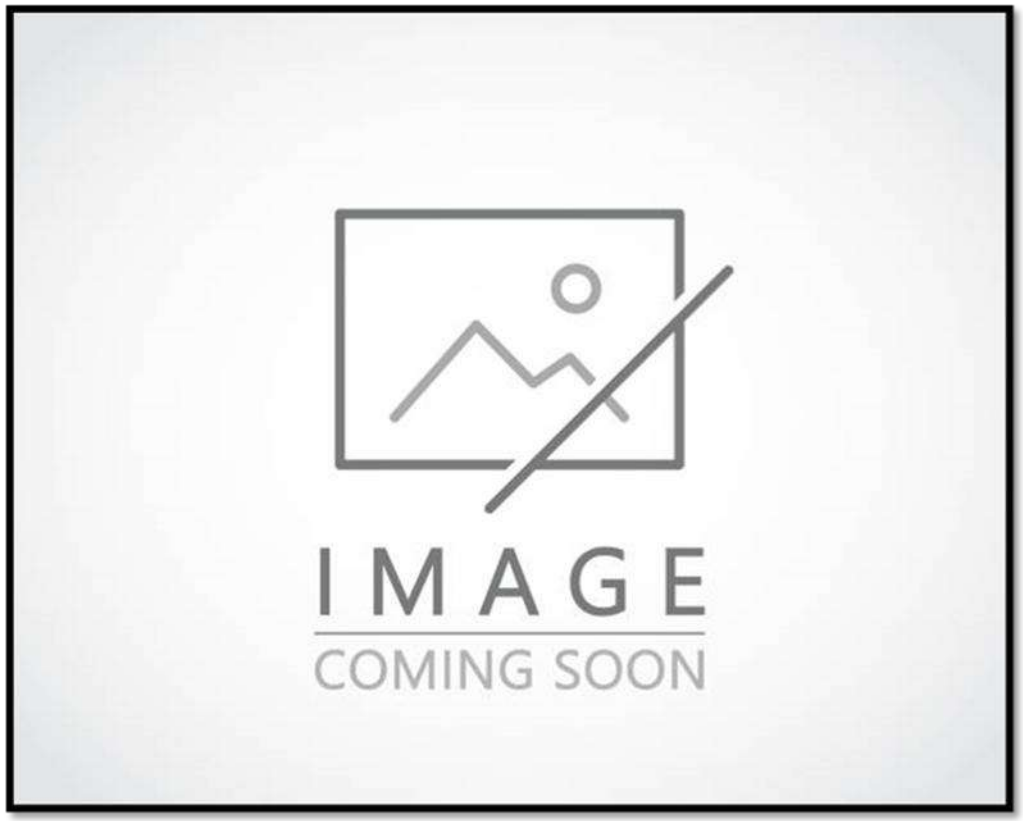

Overall Dimensions:
Core:
Inlet:
Outlet:

Tel 1.800.774.2168
www.bgrradiator.com

BGR Part Number: BT-0228-5M
750R161

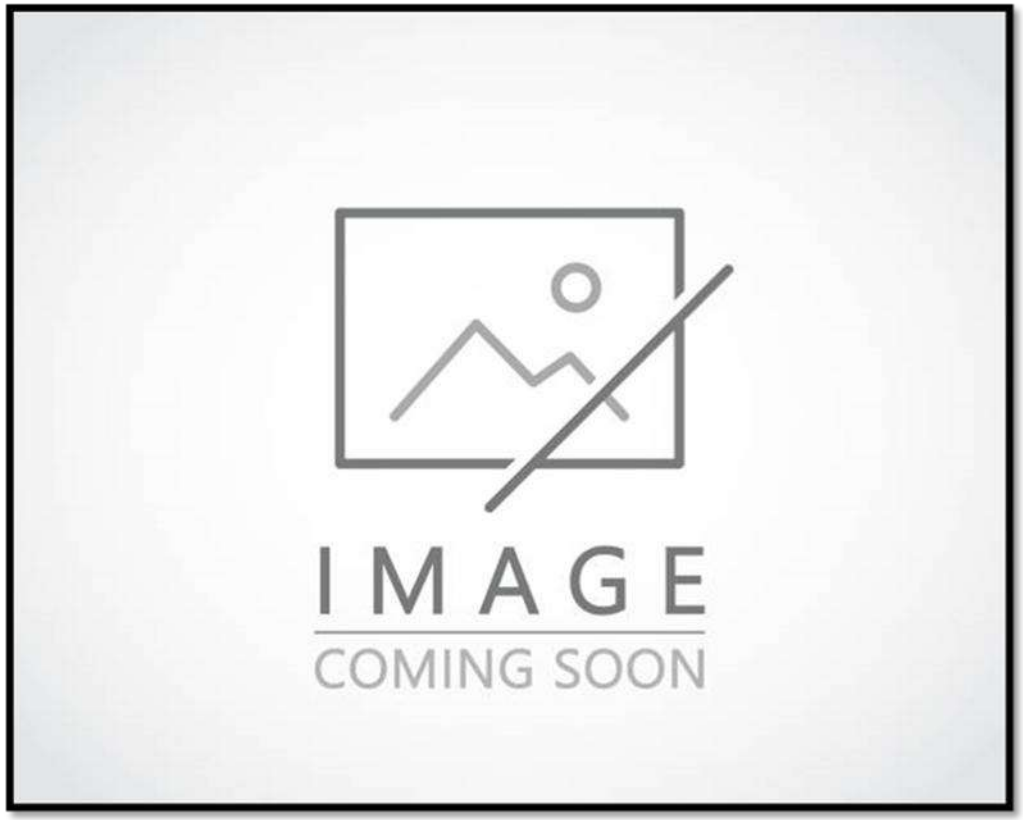

Overall Dimensions:
Core:
Inlet:
Outlet:

Listed dimensions may vary slightly from OE

BGR Part Number: BT-0229-8I
SP02253

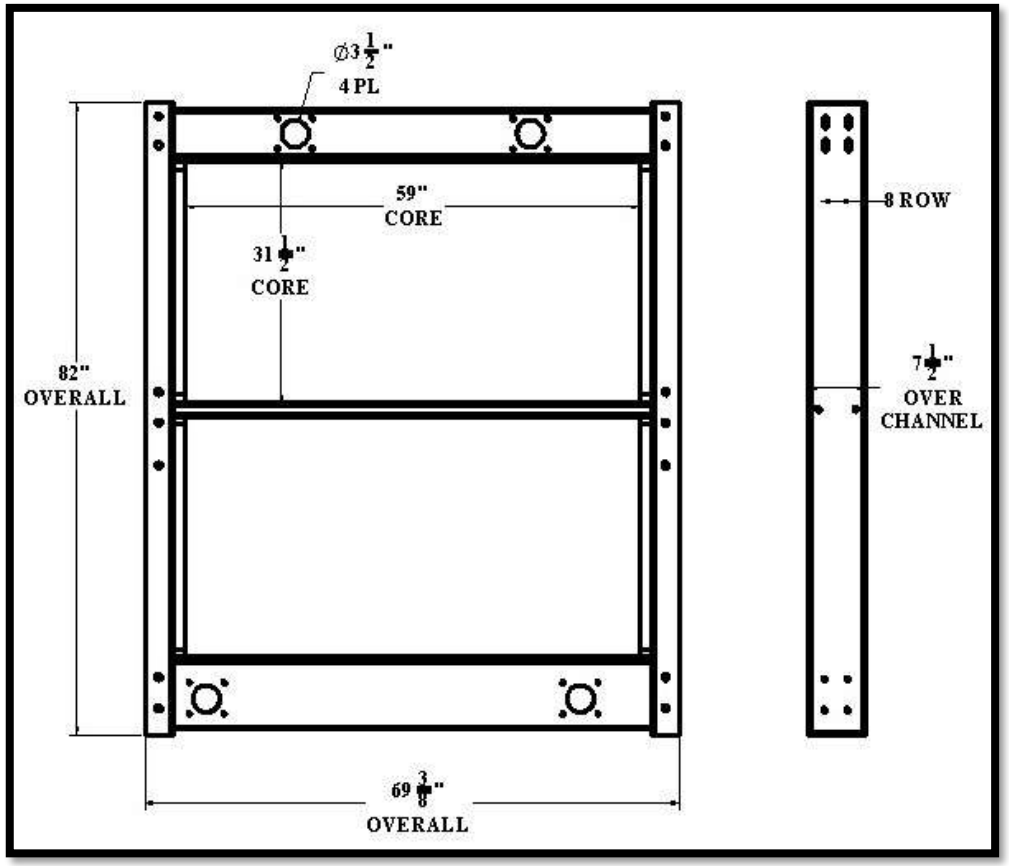

Overall Dimensions: 82” X 69-3/8” X 7-1/2”
Core: 31-1/2” X 59” X 8 ROW
Inlet: 3-1/2” OD 2 PL
Outlet: 3-1/2” OD 2 PL

Tel 1.800.774.2168
www.bgrradiator.com

BGR Part Number: BT-0230-6I
CUMMINS 855

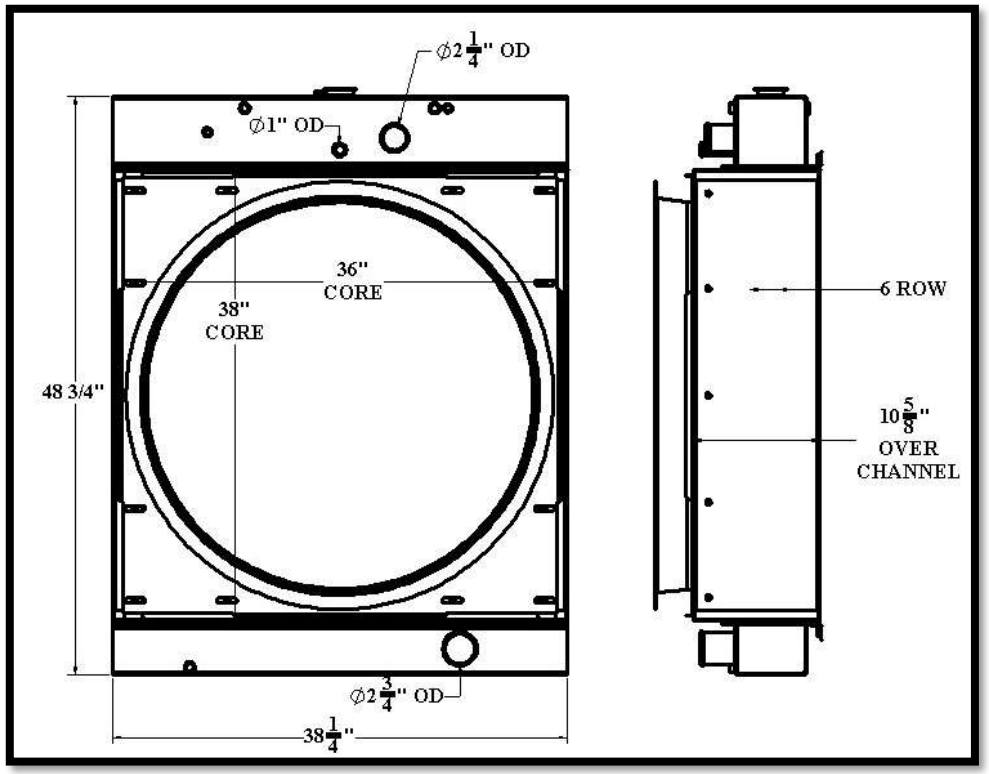

Overall Dimensions: 48-3/4” X 38-1/4” X 10-5/8”
Core: 38 X 36 X 6 ROW
Inlet: 2-1/4” OD, 1” OD
Outlet: 2-3/4” OD

Listed dimensions may vary slightly from OE

BGR Part Number: BT-0231-6I
CUMMINS 855, 21083

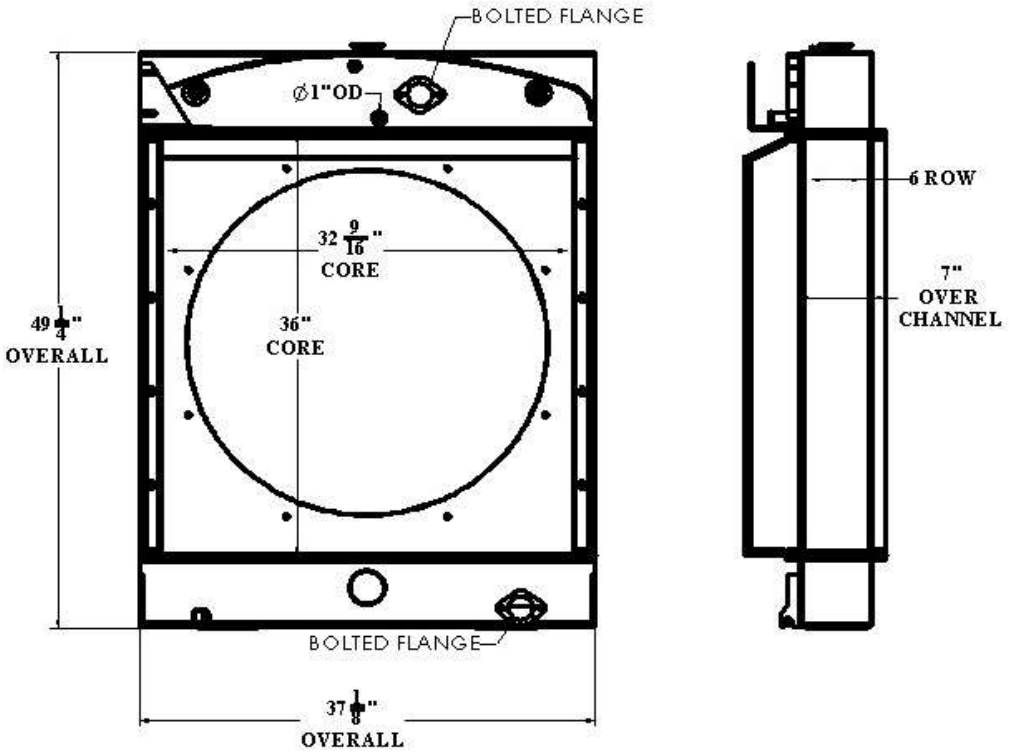

Overall Dimensions:49-1/4” X 37-1/8” X 7”
Core: 36” X 32-9/16” X 6 ROW
Inlet: BOLTED FLANGE, 1” OD
Outlet: BOLTED FLANGE

Tel 1.800.774.2168
www.bgrradiator.com

BGR Part Number: BT-0232-6I

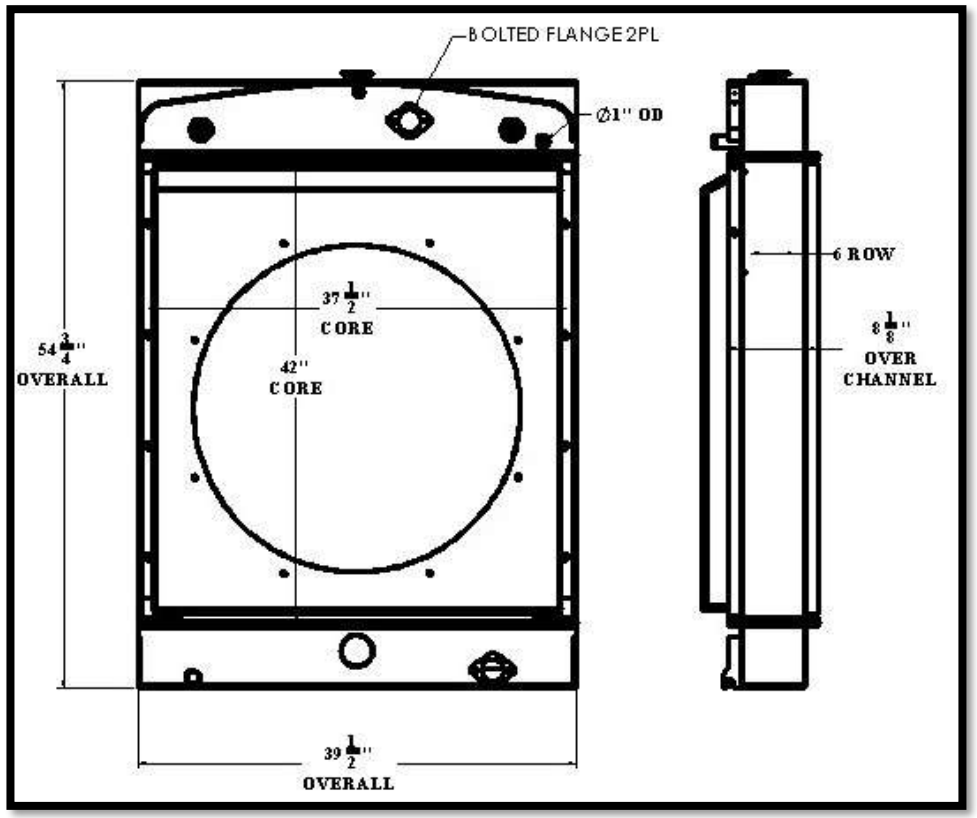

Overall Dimensions: 54-3/4” X 39-1/2” X 8-1/8”
Core: 42” X 37-1/2” X 6 ROW
Inlet: BOLTED FLANGE, 1” OD
Outlet: BOLTED FLANGE

BT231

Listed dimensions may vary slightly from OE

BT232

BGR Part Number: BT-0233-8I
CUMMINS KTA19

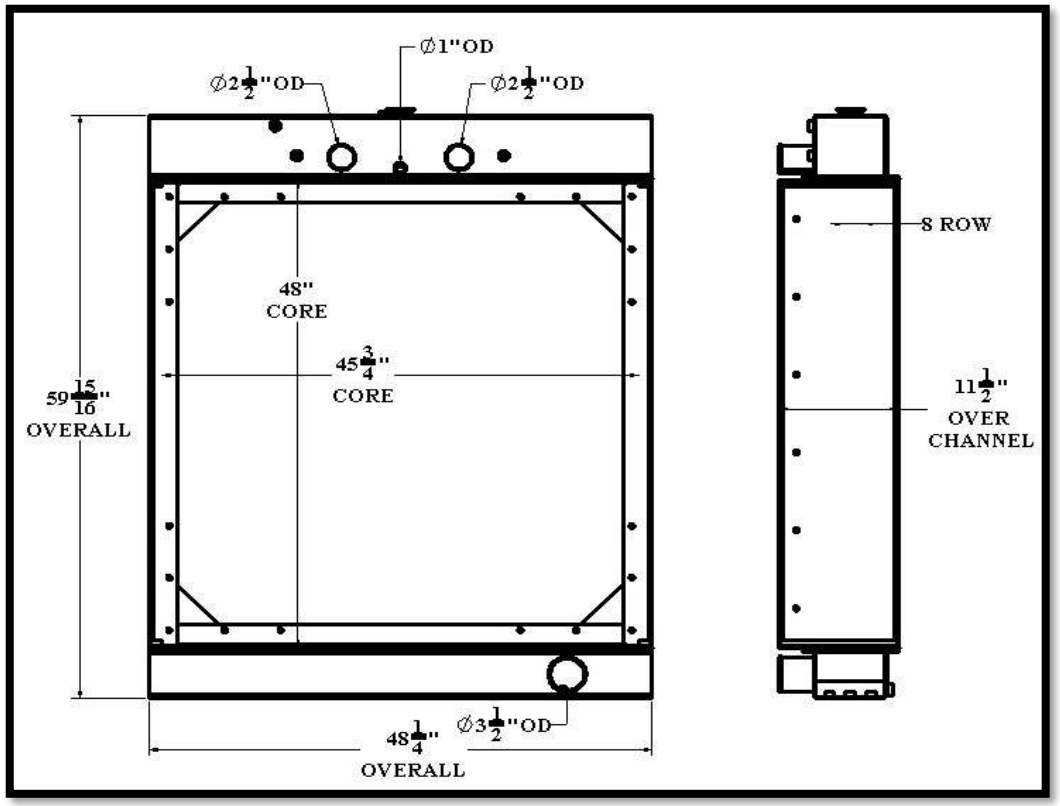

Overall Dimensions: 59-15/16” X 48-1/4” X 11-1/2”
Core: 48” X 45-3/4” X 8 ROW
Inlet: 2-1/2”OD 2PL, 1”OD
Outlet: 3-1/2”OD

Tel 1.800.774.2168
www.bgrradiator.com

BGR Part Number: BT-0234-8I
CUMMINS KTA28

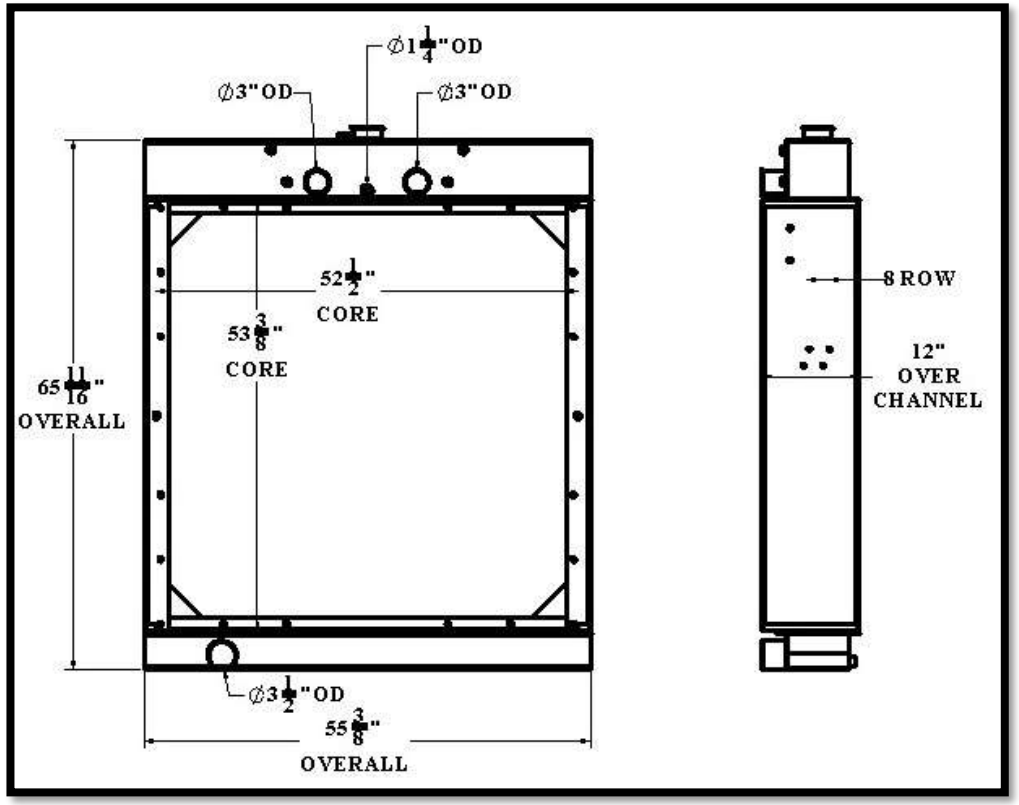

Overall Dimensions: 65-11/16” X 55-3/8” X 12”
Core: 53-3/8” X 52-1/2” X 8 ROW
Inlet: 3”OD 2PL, 1-1/4”OD
Outlet: 3-1/2”OD

BT233

Listed dimensions may vary slightly from OE

BT234

BGR Part Number: BT-0235-8I
BTCTOK2964

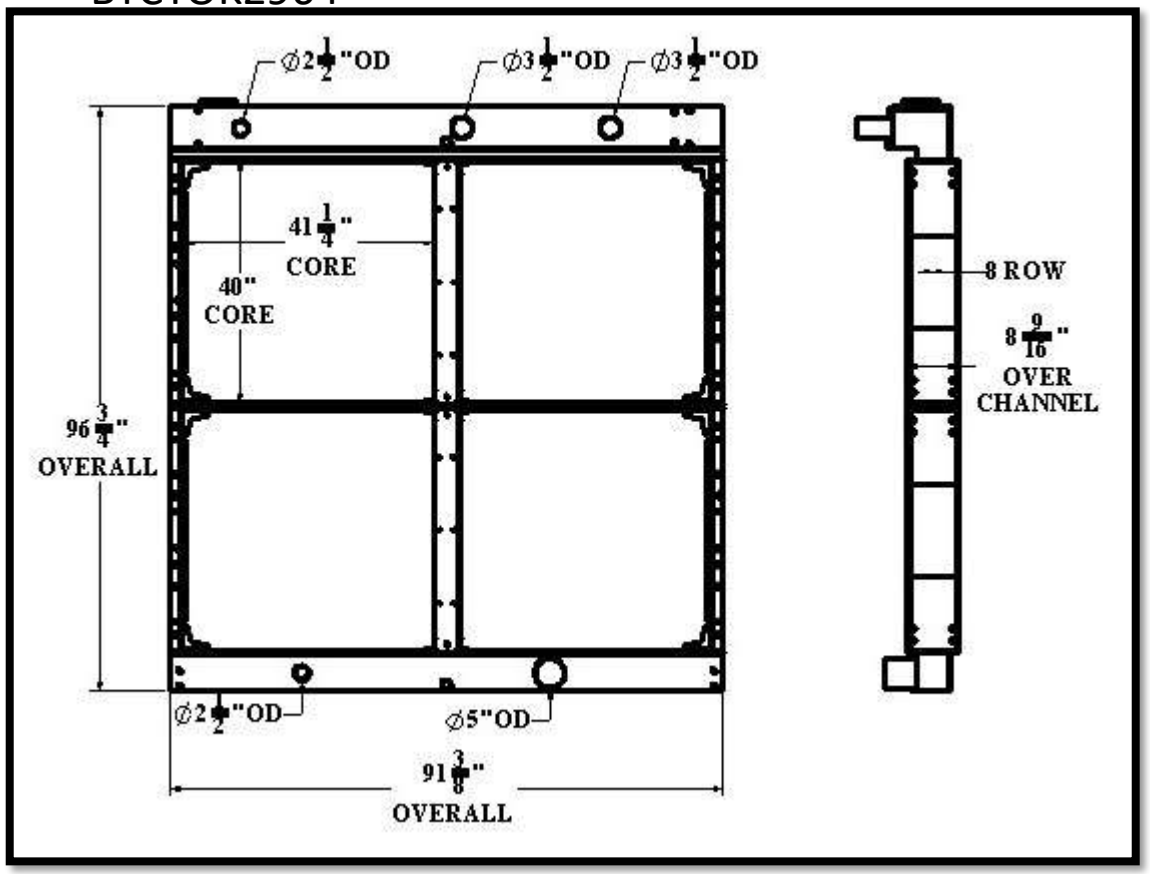

Overall Dimensions: 96-3/4” X 91-3/8” X 8-9/16”
Core: 40” X 41-1/4” X 8 ROW
Inlet: 3-1/2”OD 2PL, 2-1/2”OD
Outlet: 2-1/2”OD, 5”OD

Tel 1.800.774.2168
www.bgrradiator.com

BGR Part Number: BT-0236-8I
BTCT8L8223

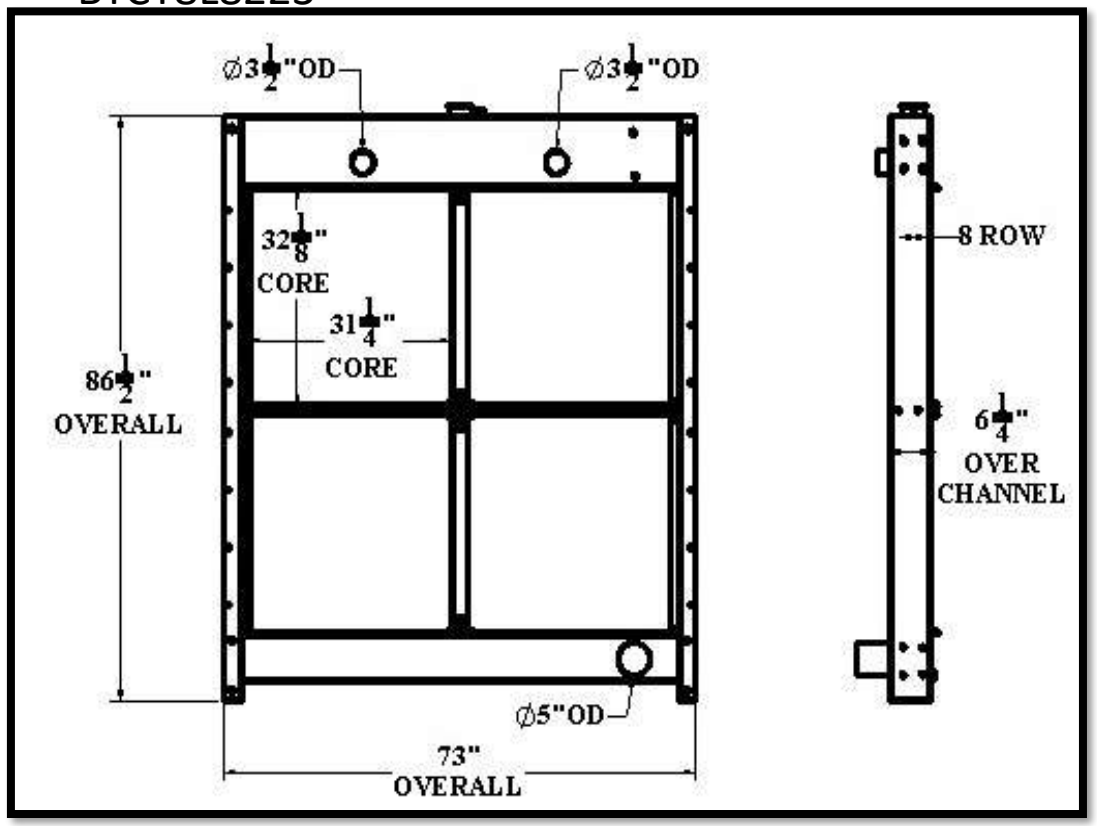

Overall Dimensions: 86-1/2” X 73” X 6-1/4”
Core: 32-1/8” X 31-1/4” X 8 ROW
Inlet: 3-1/2”OD 2PL
Outlet: 5”OD

Listed dimensions may vary slightly from OE

BGR Part Number: BT-0237-8I
BTCT3516-6Z

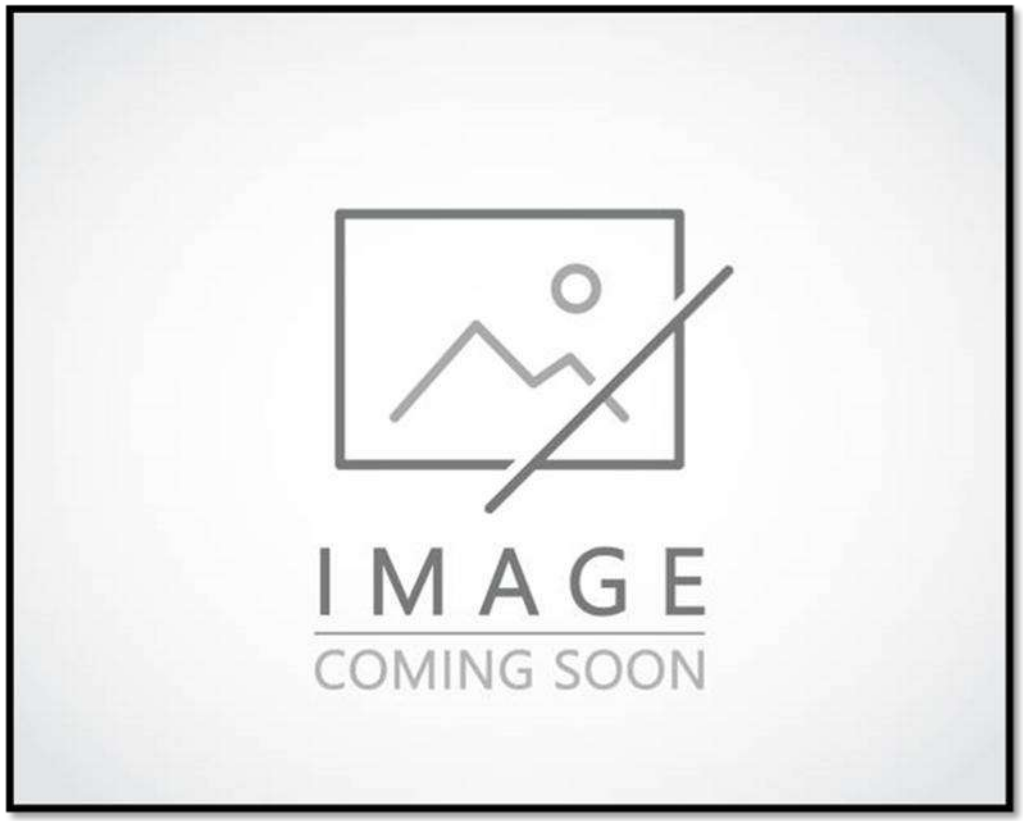

Overall Dimensions:
Core:
Inlet:
Outlet:

Tel 1.800.774.2168
www.bgrradiator.com

BGR Part Number: BT-0238-8I
CAT 3412-D379, 5L-2451

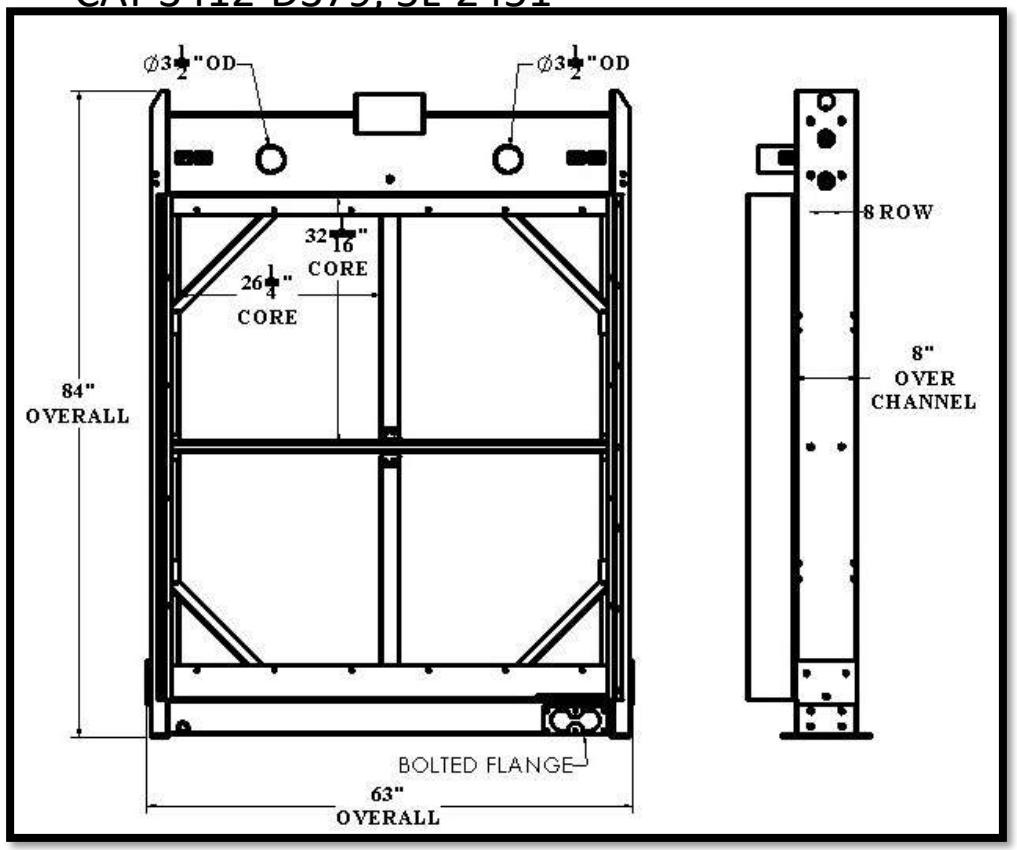

Overall Dimensions: 84” X 63” X 8”
Core: 32-1/16” X 26-1/4” X 8 ROW
Inlet: 3-1/2”OD 2PL
Outlet: BOLTED FLANGE

Listed dimensions may vary slightly from OE

BGR Part Number: BT-0239-6I
BTCT343A

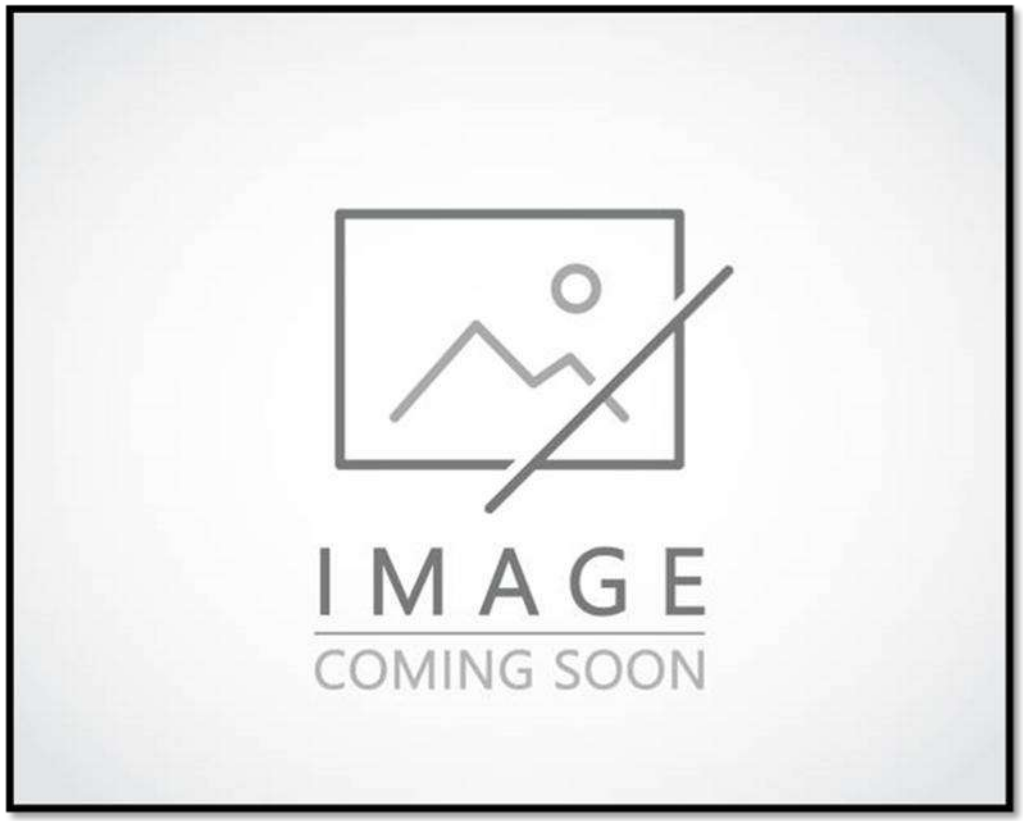

Overall Dimensions:
Core:
Inlet:
Outlet:

Tel 1.800.774.2168
www.bgrradiator.com

BGR Part Number: BT-0240-8I
BGR8137CT, 4N-8995

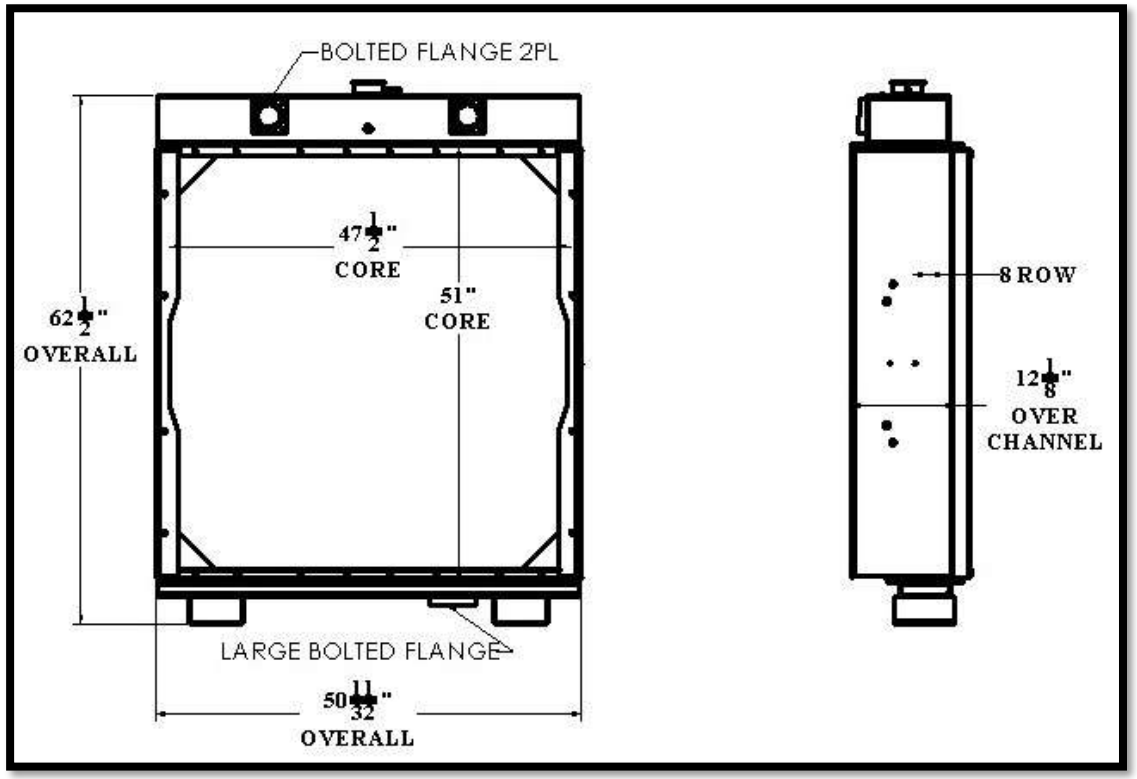

Overall Dimensions: 62-1/2” X 50-11/32” X 12-1/8”
Core: 51” X 47-1/2” X 8 ROW
Inlet: 2 BOLTED FLANGE
Outlet: LARGER BOLTED FLANGE

Listed dimensions may vary slightly from OE

BGR Part Number: BT-0241-8I
BGR8147CT, 8N-4880

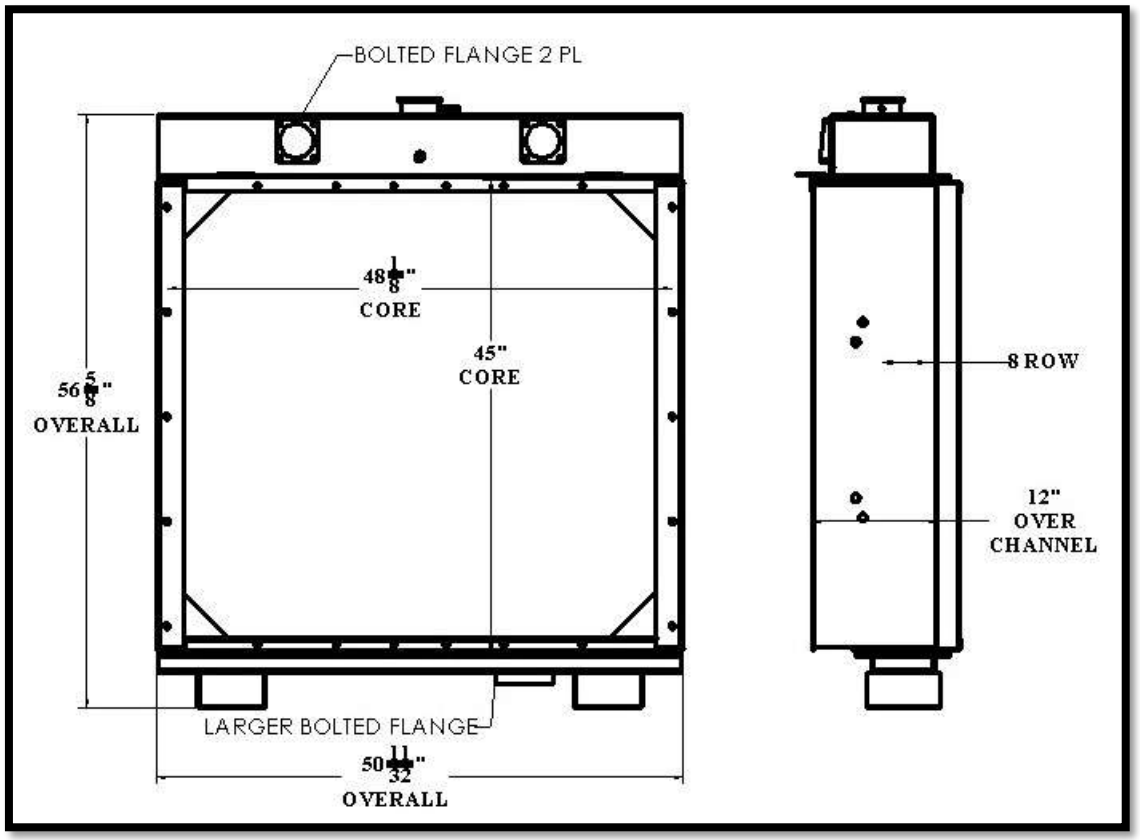

Overall Dimensions:56-5/8” X 50-11/32” X 12”
Core: 45” X 48-1/8” X 8 ROW
Inlet: BOLTED FLANGE 2PL
Outlet: LARGER BOLTED FLANGE

Tel 1.800.774.2168
www.bgrradiator.com

BGR Part Number: BT-0242-8I
241-7650, 169-2192, 169-2651, 241-7652,
10R-0734

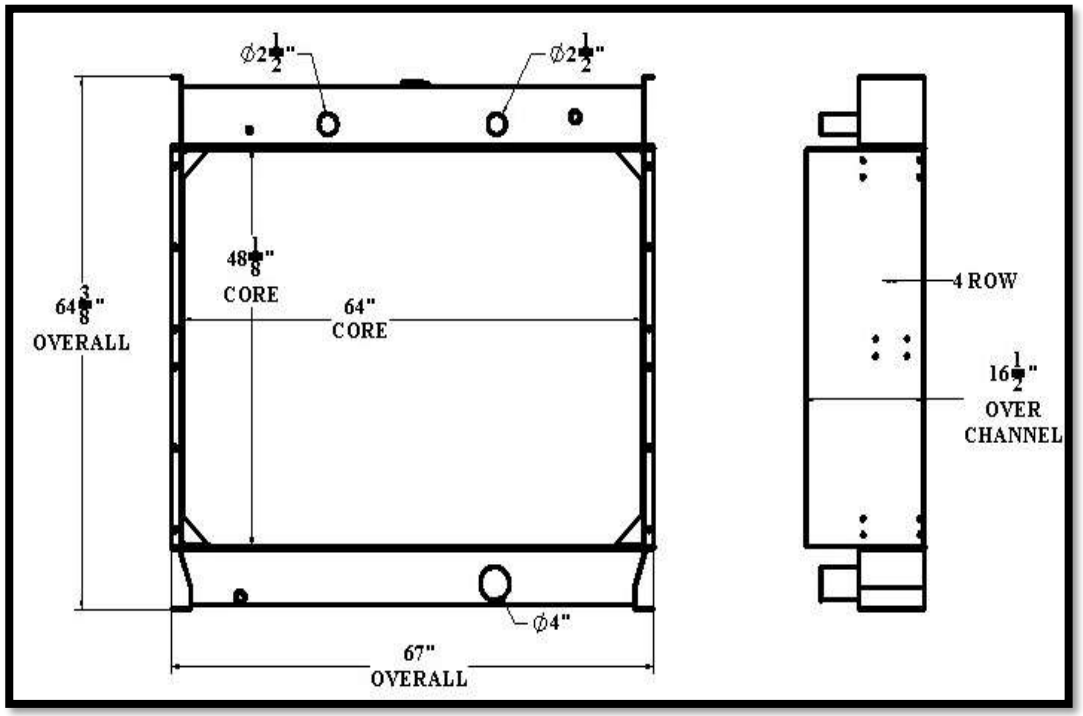

Overall Dimensions: 64-3/8” X 67” X 16-1/2”
Core:48-1/8” X 64” X 4 ROW
Inlet: 2-1/2” OD 2 PL
Outlet: 4” OD

Listed dimensions may vary slightly from OE

BGR Part Number: BT-0243-5T
1A12423, MODINE 030389, A280993

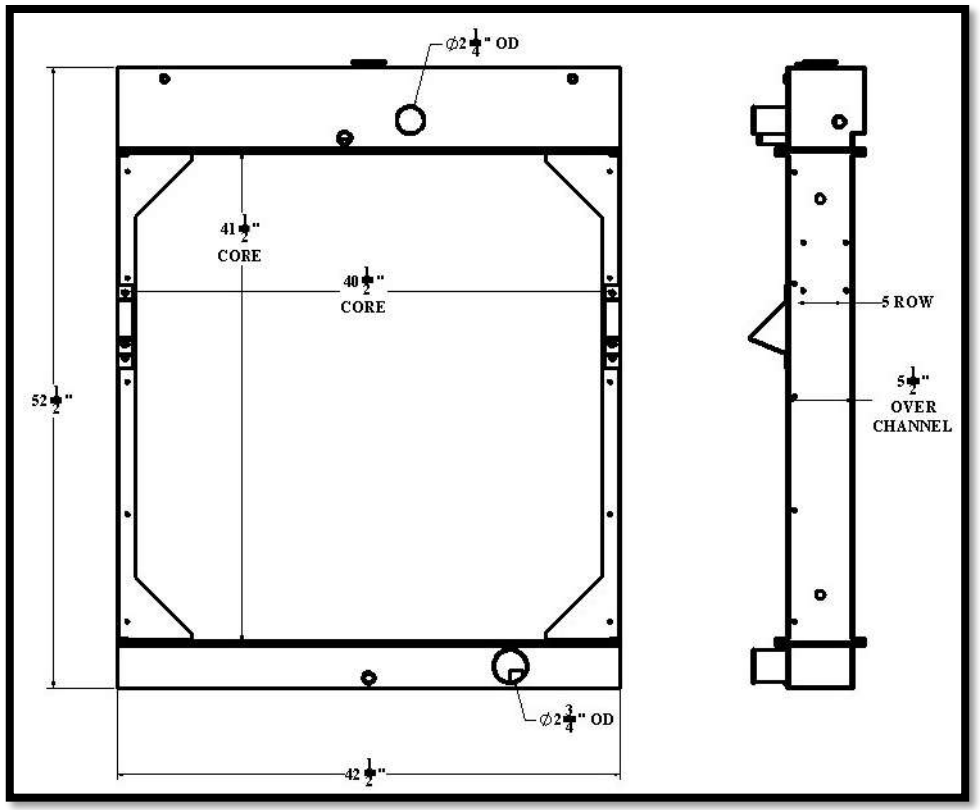

Overall Dimensions: 52-1/2” X 42-1/2” X 5-1/2”
Core: 41-1/2” X 40-1/2” X 5 ROW
Inlet: 2-1/4”
Outlet: 2-3/4”

Tel 1.800.774.2168
www.bgrradiator.com

BGR Part Number: BT-0244-8I

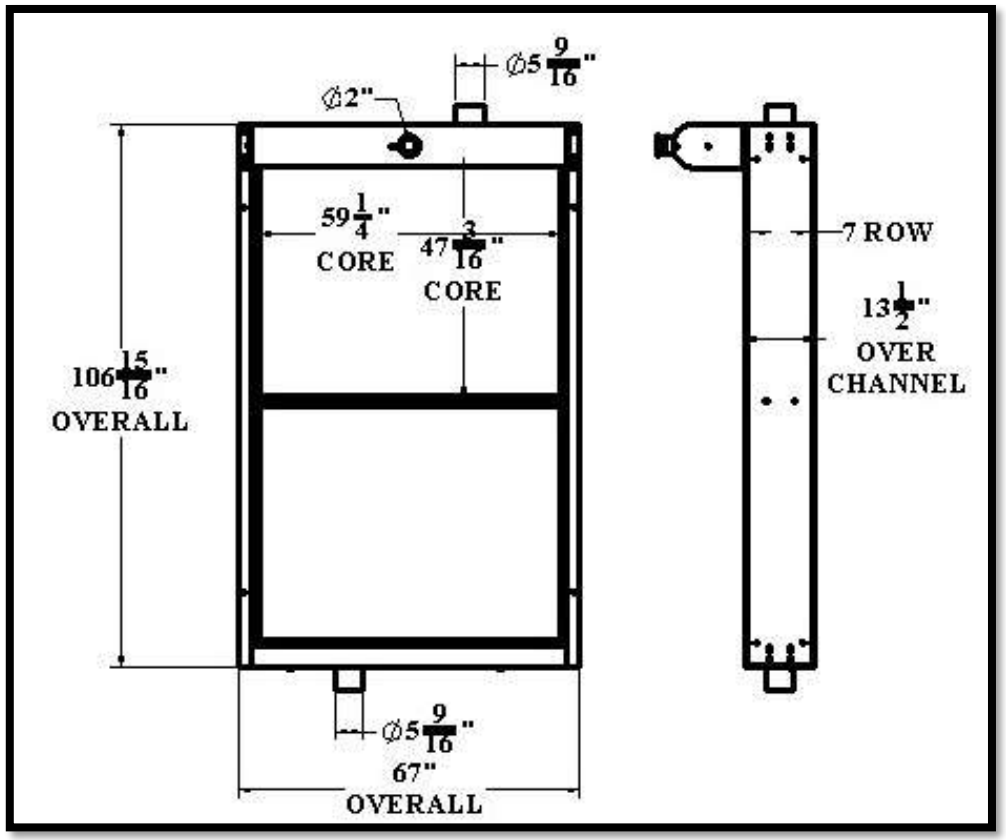

Overall Dimensions: 106-15/16”” X 67” X 13-1/2”
Core:59-1/4” X 47-3/16” X 7 ROW
Inlet: 2”OD, 5-9/16”OD
Outlet: 5-9/16”OD

BT243

Listed dimensions may vary slightly from OE

BT244

BGR Part Number: BT-0245-8I8I
HCO85S04

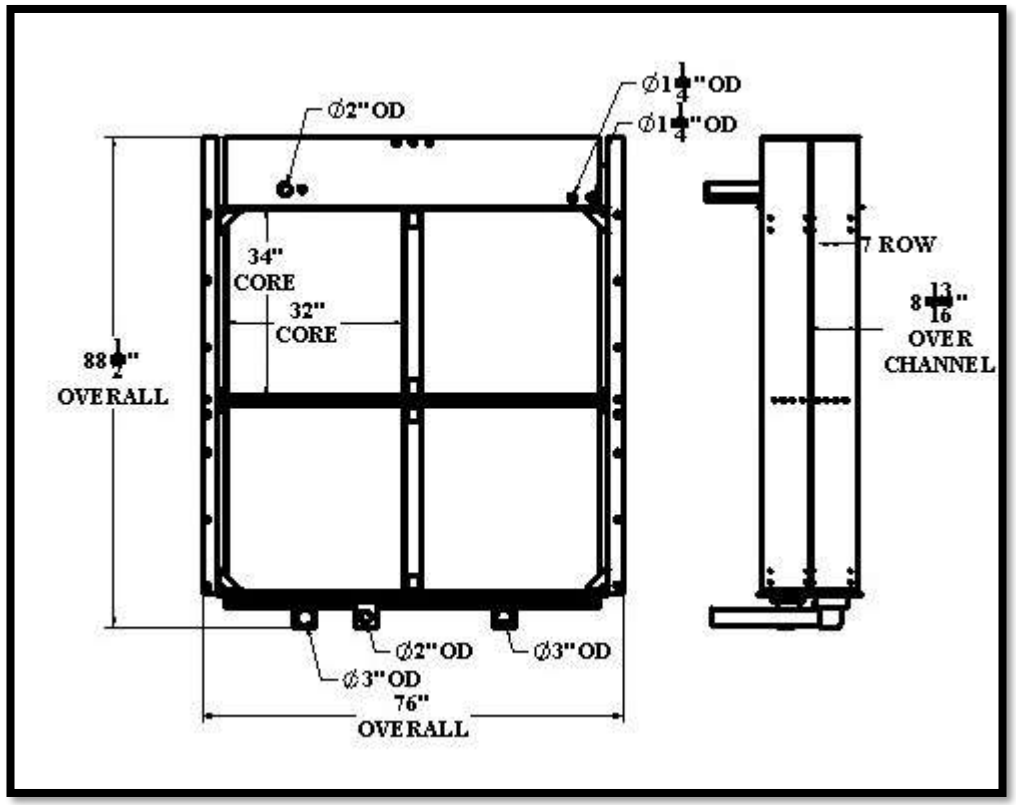

Overall Dimensions:88-1/2” X 76” X 8-13/16”
Core:34” X 32” X 7 ROW
Inlet: 2”OD, 1-1/4”OD, 1-1/4”OD
Outlet: 3”OD, 3”OD, 2”OD

Tel 1.800.774.2168
www.bgrradiator.com

BGR Part Number: BT-0246-7I

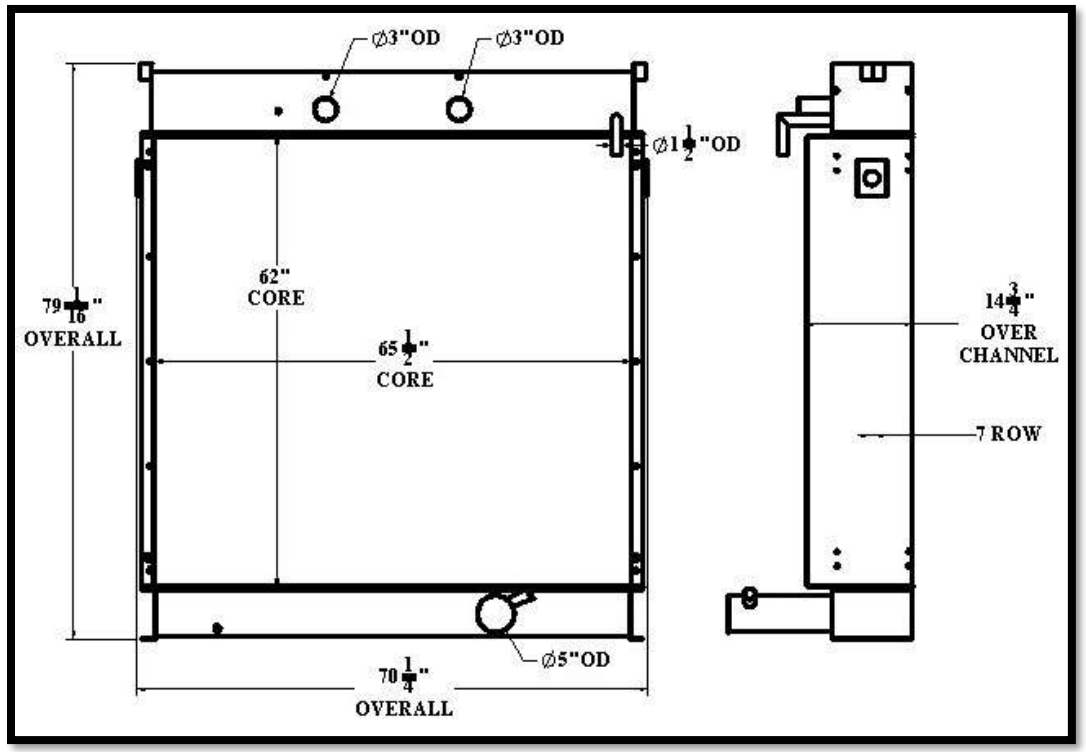

Overall Dimensions:79-1/16” X 70-1/4” X 14-3/4”
Core:62” X 65-1/2” X 7 ROW
Inlet:3”OD, 3”OD, 1-1/2”OD
Outlet:5”OD

BT245

Listed dimensions may vary slightly from OE

BT246

BGR Part Number: BT-0247-7T

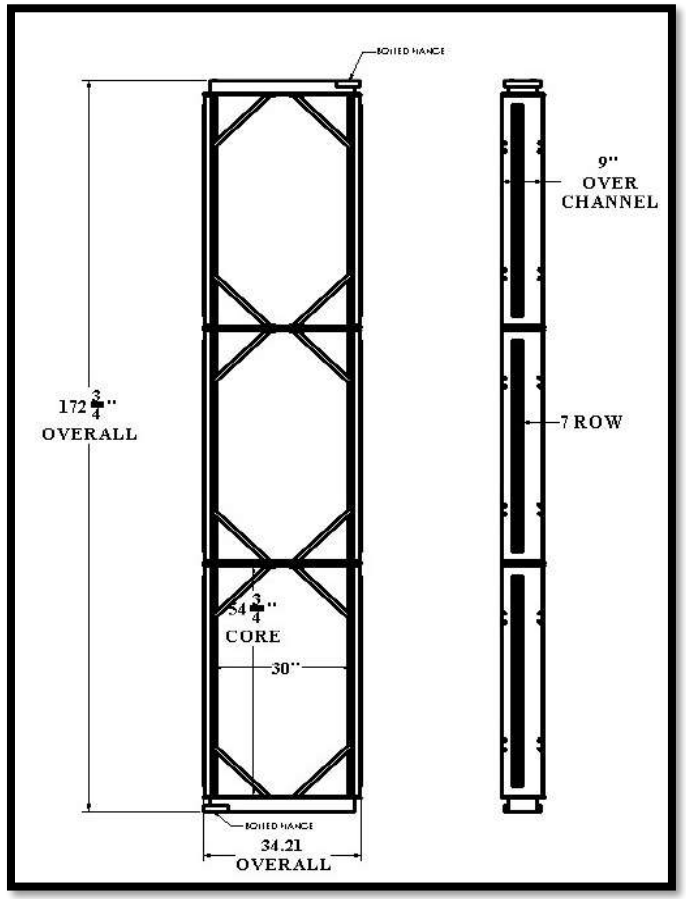

Overall Dimensions: 172-3/4” X 34.21 X 9”
Core: 54-3/4” X 30” X 7 ROW
Inlet: BOLTED FLANGE
Outlet: BOLTED FLANGE

Tel 1.800.774.2168
www.bgrradiator.com

BGR Part Number: BT-0248-8I8I
GM28643

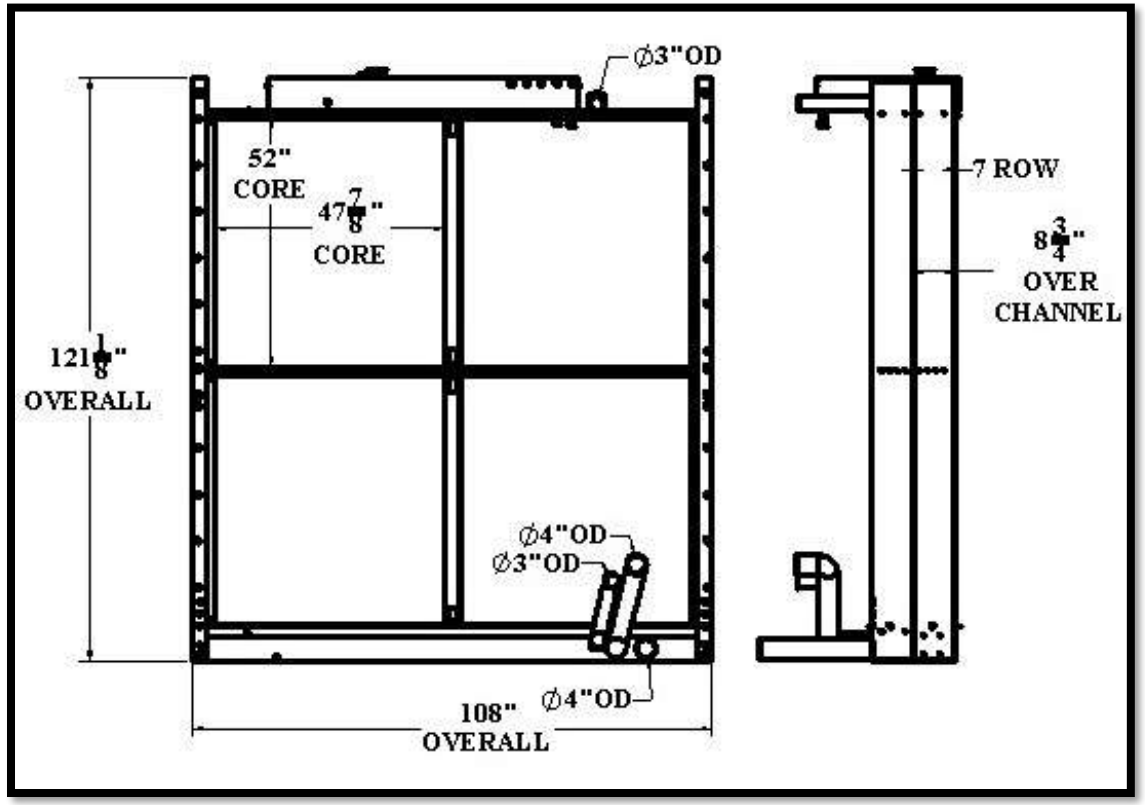

Overall Dimensions:121-1/8” X 108” X 8-3/4”
Core:52” X 47-7/8” X 7 ROW
Inlet:3”OD
Outlet:4”OD, 4”OD, 3”OD

Listed dimensions may vary slightly from OE

BGR Part Number: BT-0249-7M

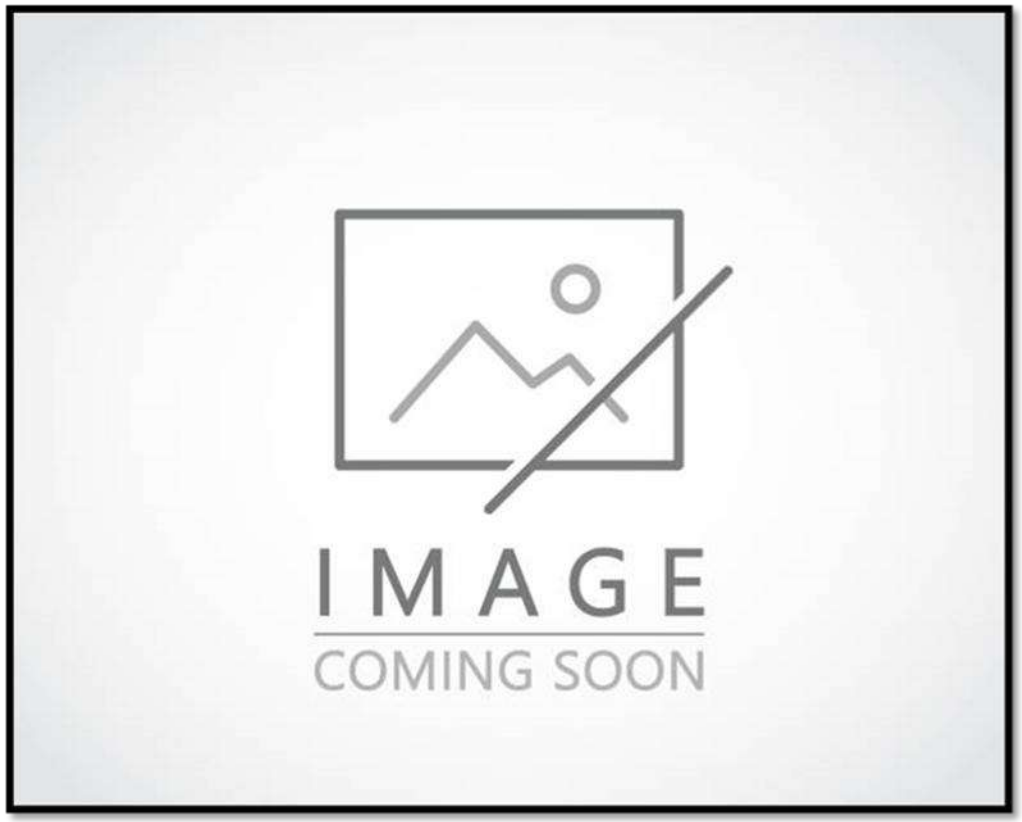

Overall Dimensions:
Core:
Inlet:
Outlet:

Tel 1.800.774.2168
www.bgrradiator.com

BGR Part Number: BT-0250-5M

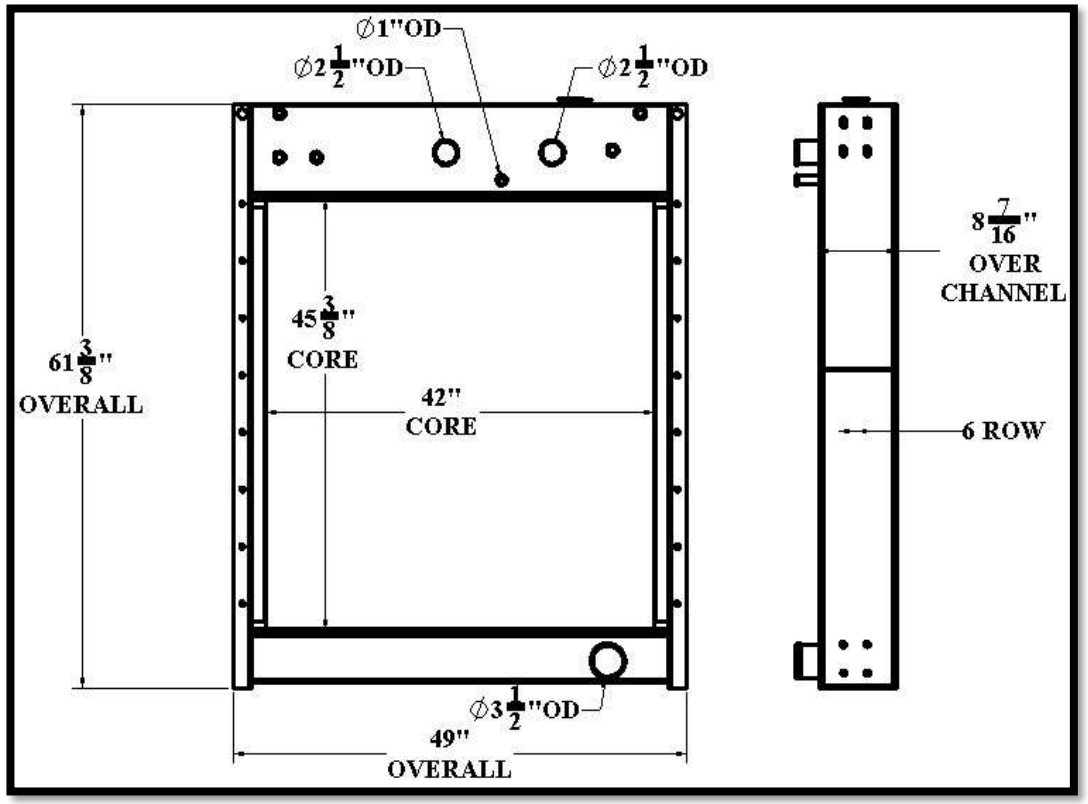

Overall Dimensions:61-3/8” X 49” X 8-7/16”
Core:45-3/8” X 42” X 6 ROW
Inlet:2-1/2”OD, 2-1/2”OD, 1”OD
Outlet:3-1/2”OD

BT249

Listed dimensions may vary slightly from OE

BT250

BGR Part Number: BT-0251-6Z

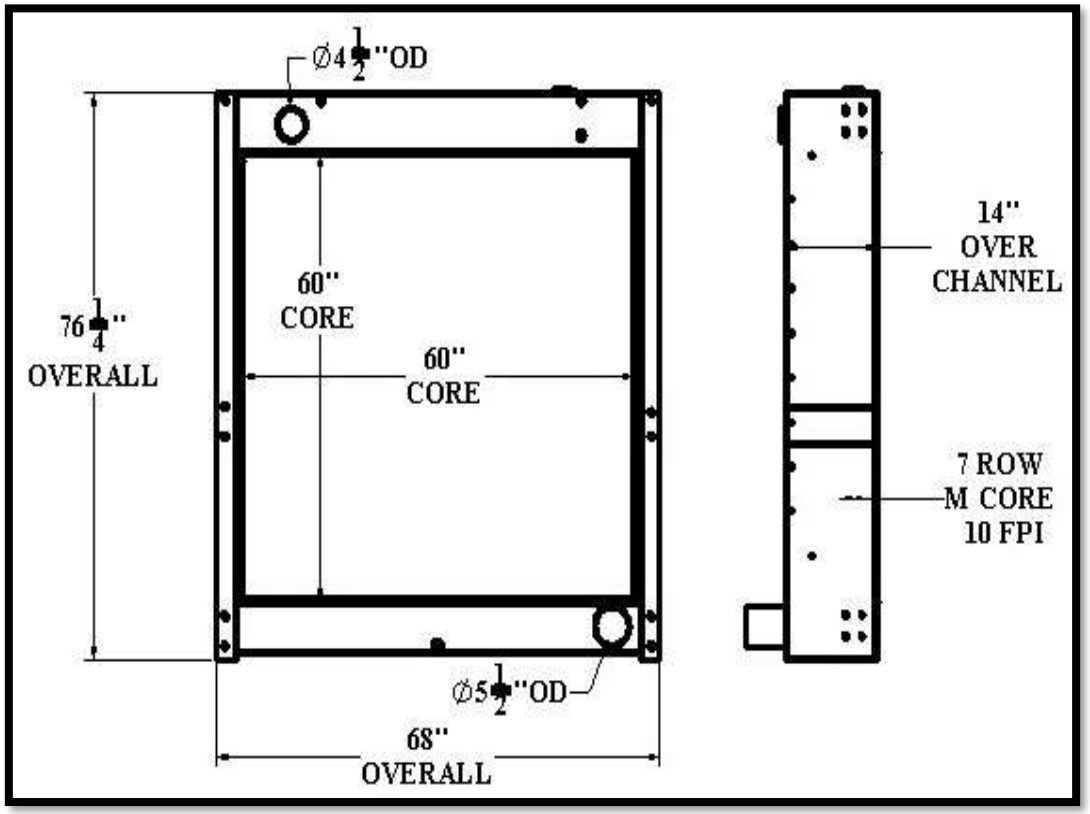

Overall Dimensions: 76-1/4” X 68” X 14”
Core:60” X 60” X 7 ROW
Inlet:4-1/2”
Outlet:5-1/2”

Tel 1.800.774.2168
www.bgrradiator.com

BGR Part Number: BT-0252-5M

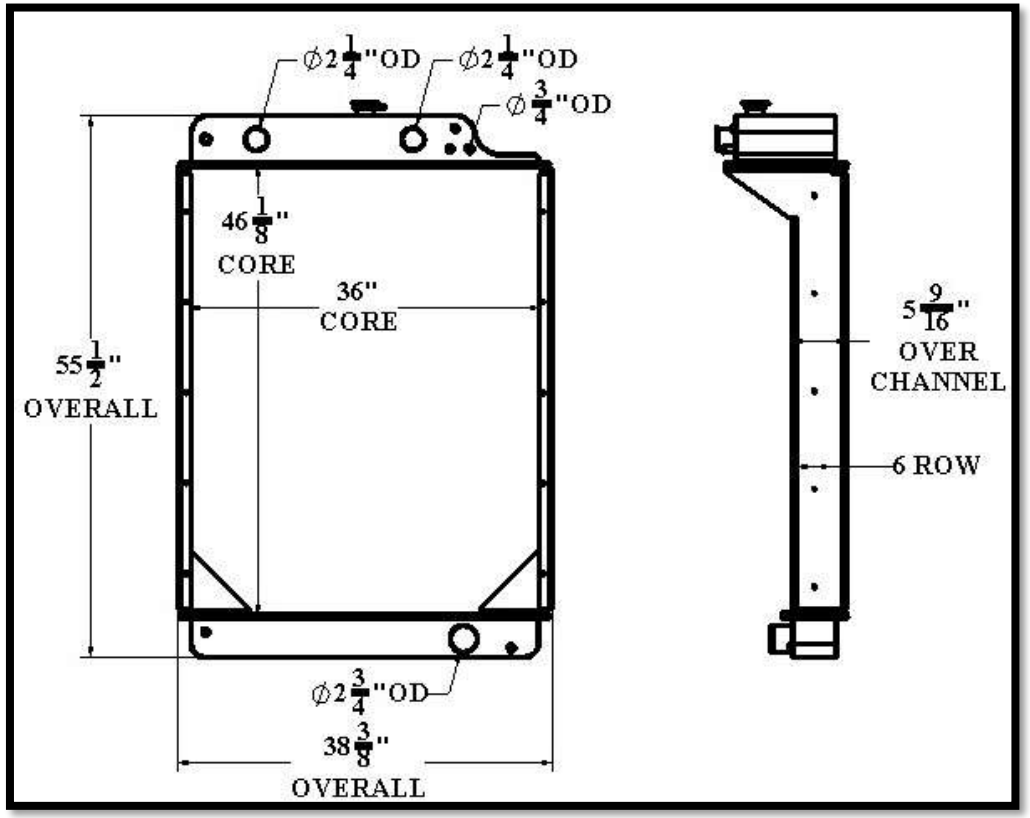

Overall Dimensions:55-1/2” X 38-3/8” X 5-9/16”
Core:46-1/8” X 36” X 6 ROW
Inlet: 2-1/4”OD, 2-1/4”OD, ¾”OD
Outlet:2-3/4”OD

BT251

Listed dimensions may vary slightly from OE

BT252

BGR Part Number: BT-0253-8I8I

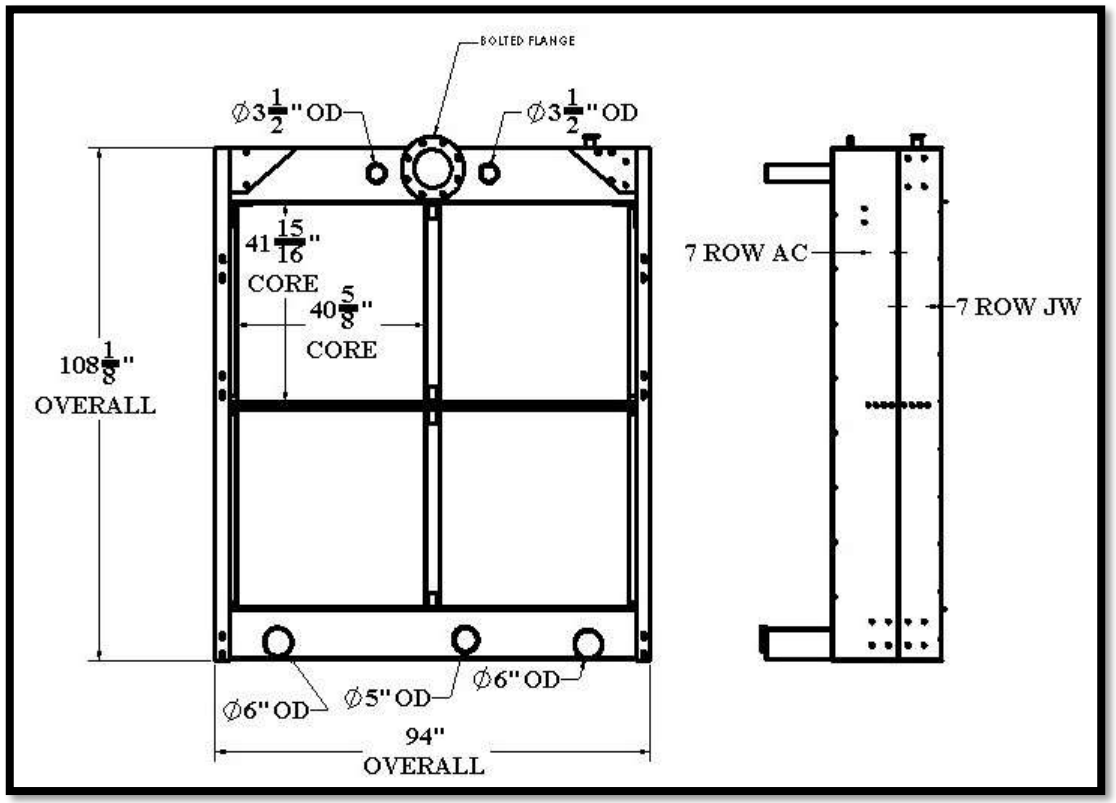

Overall Dimensions:108-1/8” X 94”
AC Core: 41-15/16” X 40-5/8” X 7 ROW
JW Core:41-15/16” X 40-5/8” X 7 ROW
AC Inlet: BOLTED FLANGE
AC Outlet:6”OD 2 PL
JW Inlet: 3-1/2”OD 2PL
JW Outlet:5”OD

BT253

Tel 1.800.774.2168
www.bgrradiator.com

BGR Part Number: BT-0254-4I
RS-2852 REV.0, 42762-01-001

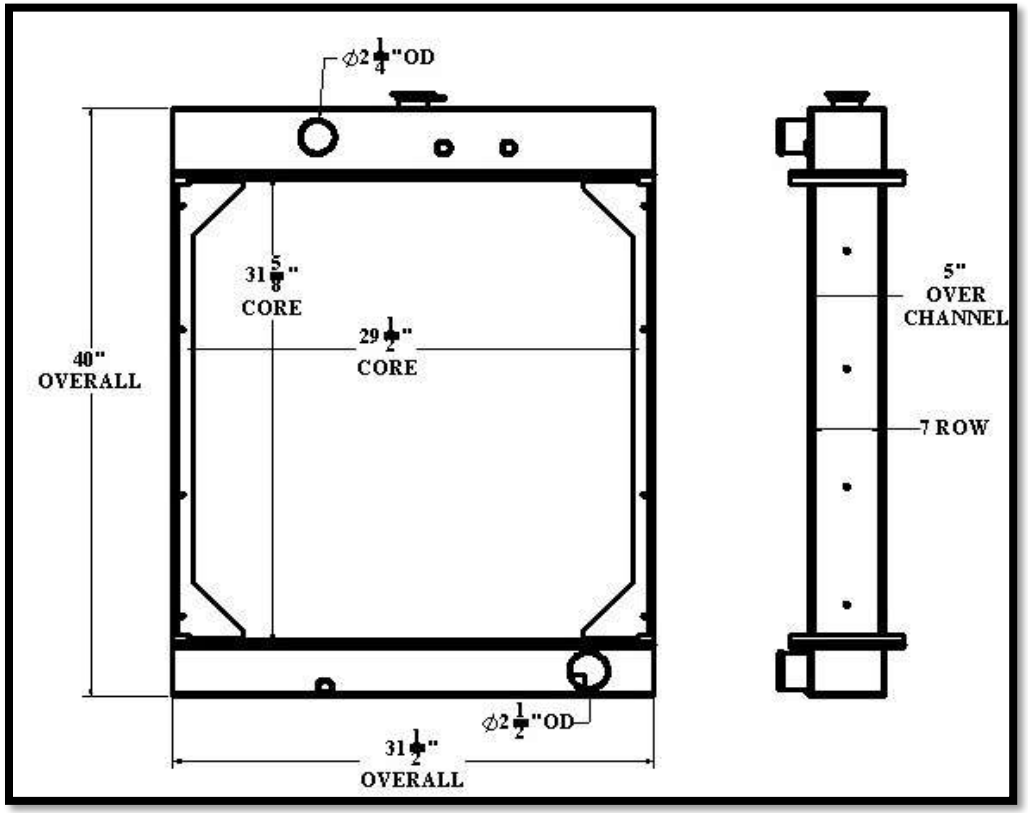

Overall Dimensions:40” X 31-1/2” X 5”
Core:31-5/8” X 29-1/2” X 7 ROW
Inlet: 2-1/4”OD
Outlet:2-1/2”OD

Listed dimensions may vary slightly from OE

BT254

BGR Part Number: BT-0255

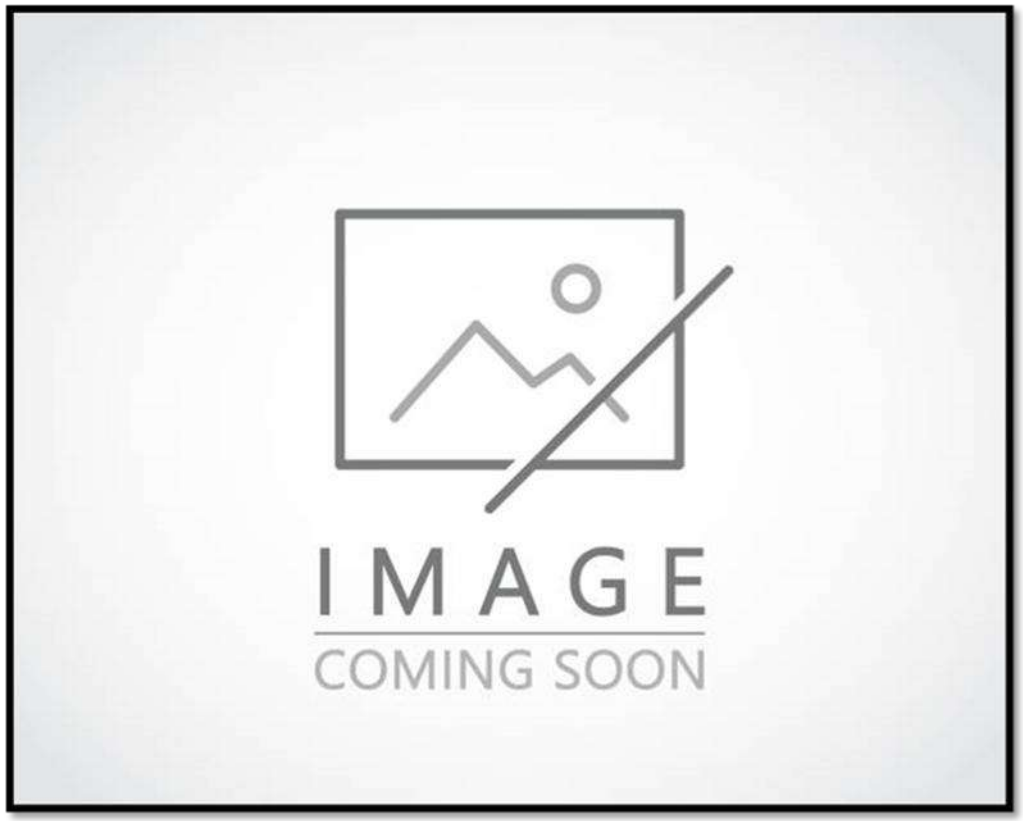

Overall Dimensions:
Core:
Inlet:
Outlet:

Tel 1.800.774.2168
www.bgrradiator.com

BGR Part Number: BT-0256-8I8I

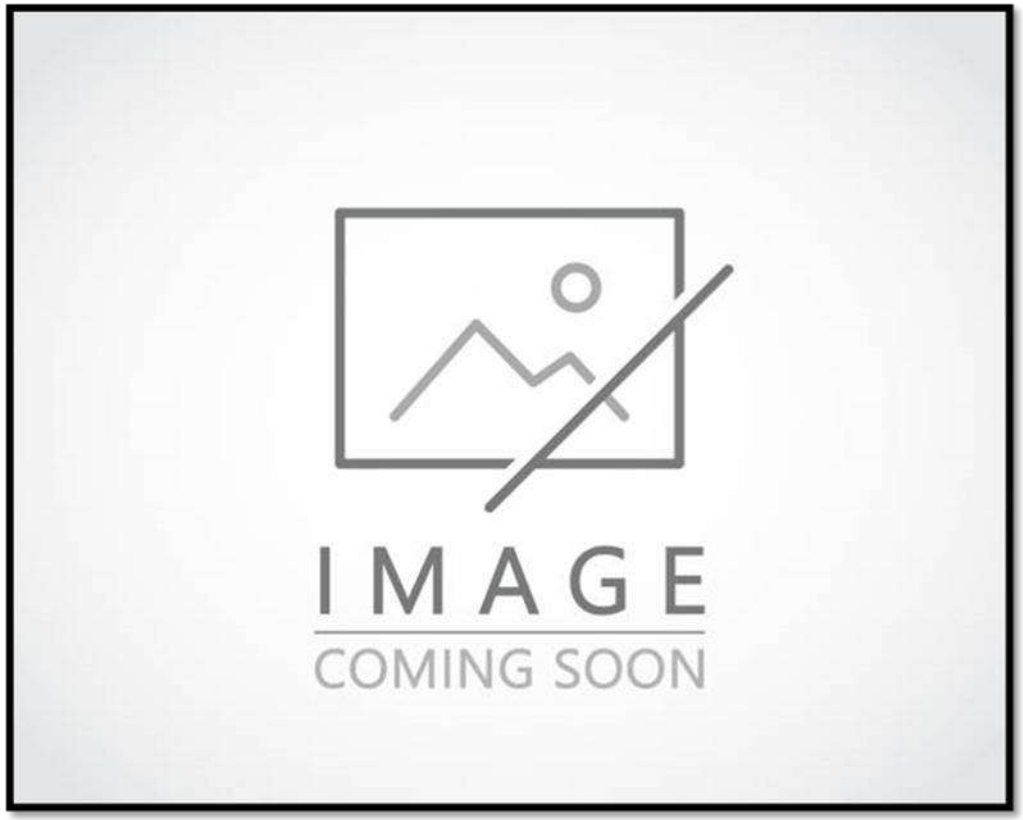

Overall Dimensions:
Core:
Inlet:
Outlet:

Listed dimensions may vary slightly from OE

BGR Part Number: BT-0257-5R
SPO4183, M-9-EF

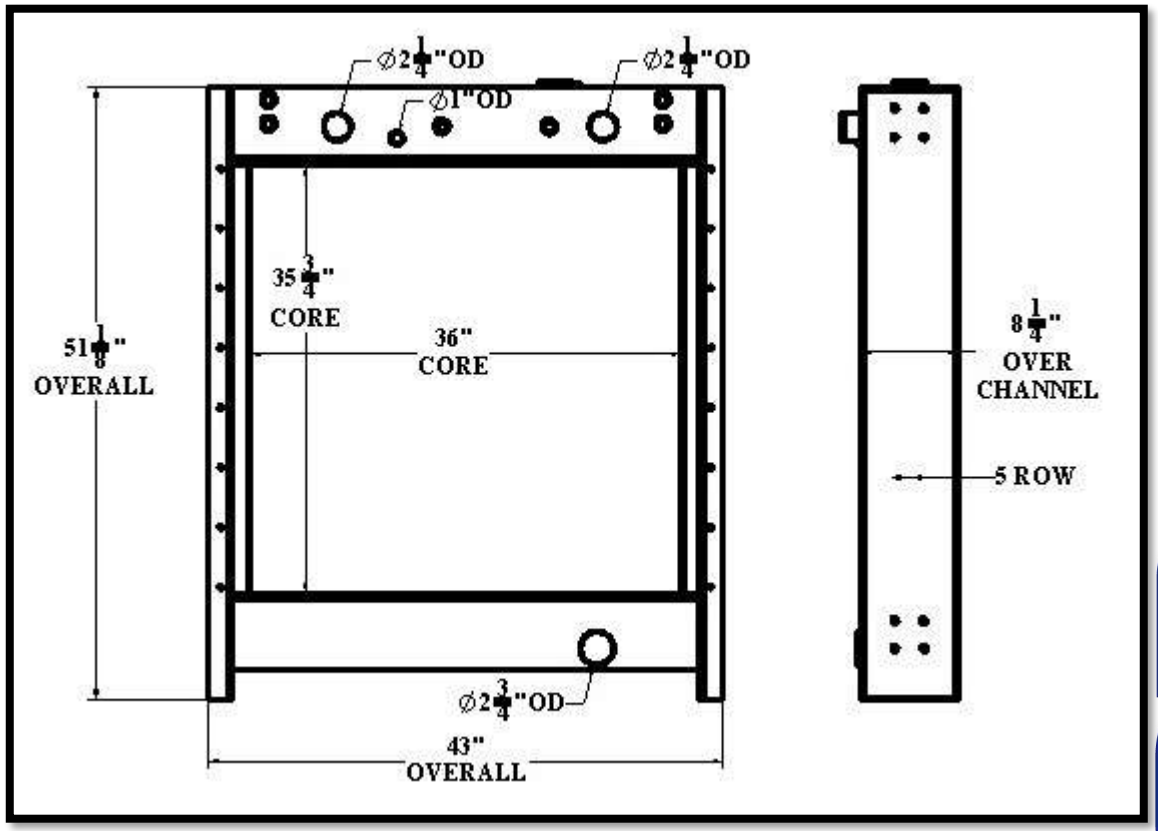

Overall Dimensions: 51-1/8” X 43” X 8-1/4”
Core: 35-3/4” X 36” X 5 ROW
Inlet: 2-1/4”OD 2 PL, 2-3/4”OD
Outlet: 2-3/4”OD

Tel 1.800.774.2168
www.bgrradiator.com

BGR Part Number: BT-0258-8I

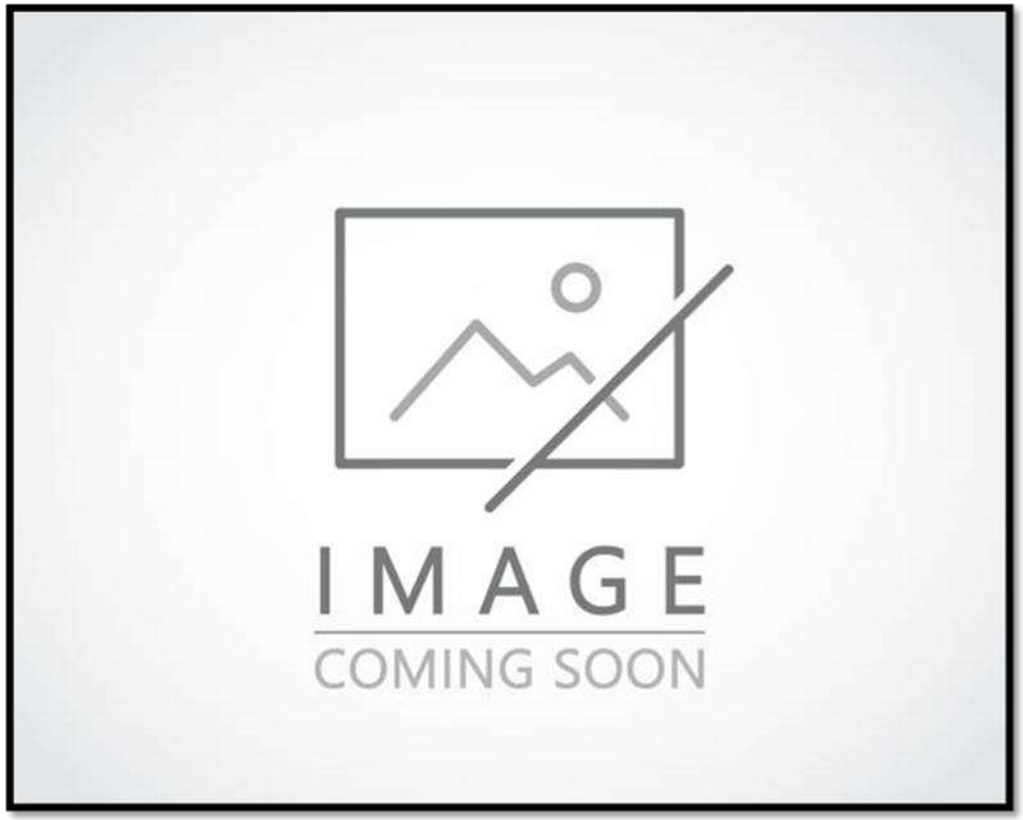

Overall Dimensions:
Core:
Inlet:
Outlet:

Listed dimensions may vary slightly from OE

BGR Part Number: BT-0259-8I8I
GM30486, 410003

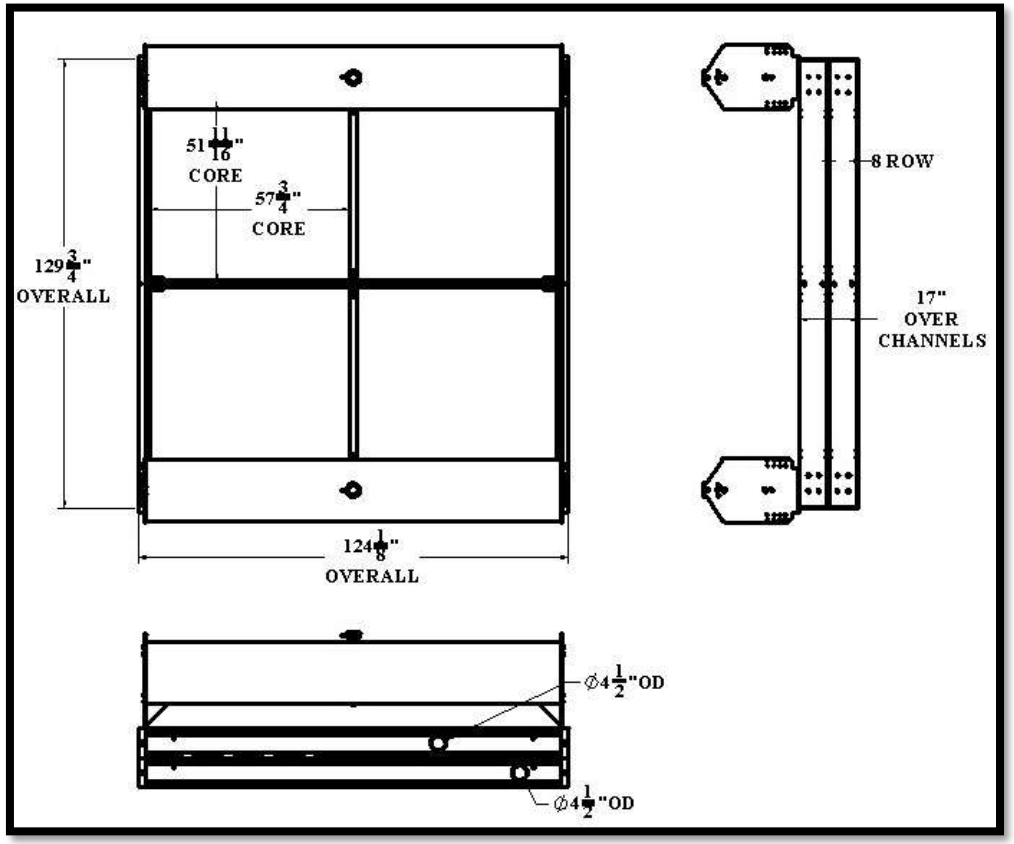

Overall Dimensions: 129-3/4” X 124-1/8” X 17”
Core: 51-11/16” X 57-3/4” X 8 ROW
Inlet: 4-1/2”OD
Outlet: 4-1/2”OD

Tel 1.800.774.2168
www.bgrradiator.com

BGR Part Number: BT-0260-3M

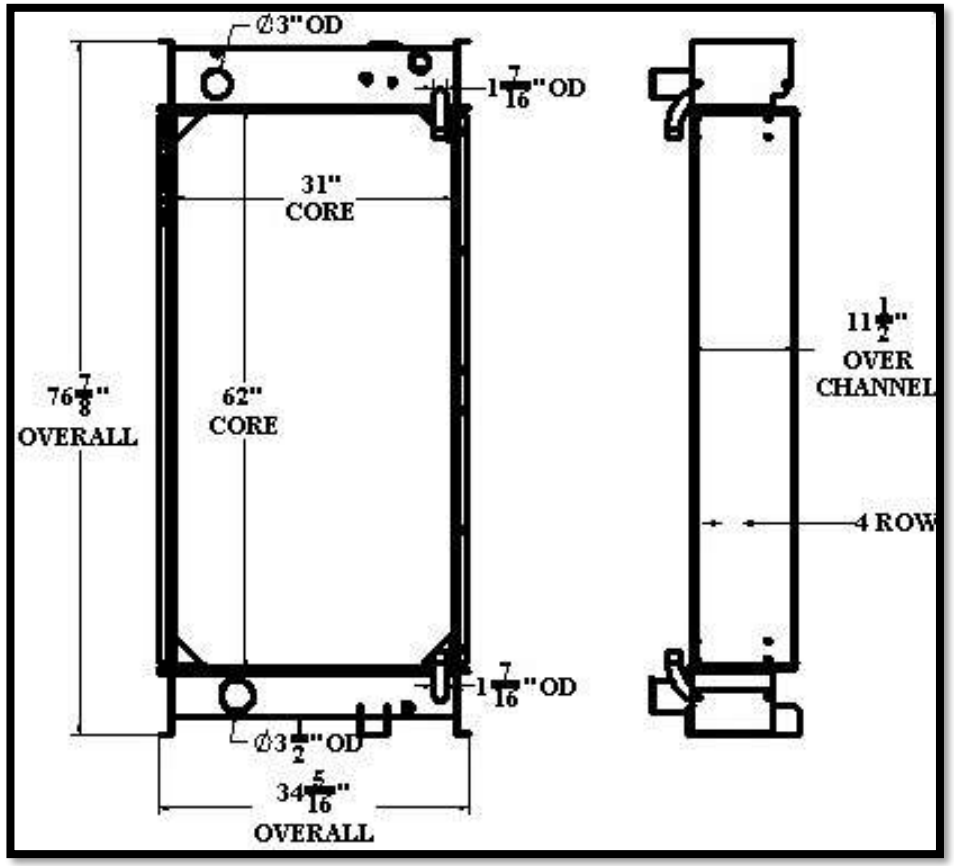

Overall Dimensions: 76-7/8” X 34-5/16” X 11-1/2”
Core: 62” X 31” X 4 ROW
Inlet: 3”OD, 1-7/16”OD
Outlet: 3-1/2”OD, 1-7/16”OD

BT259

Listed dimensions may vary slightly from OE

BT260

BGR Part Number: BT-0261-6T
RS-7628 REV.0

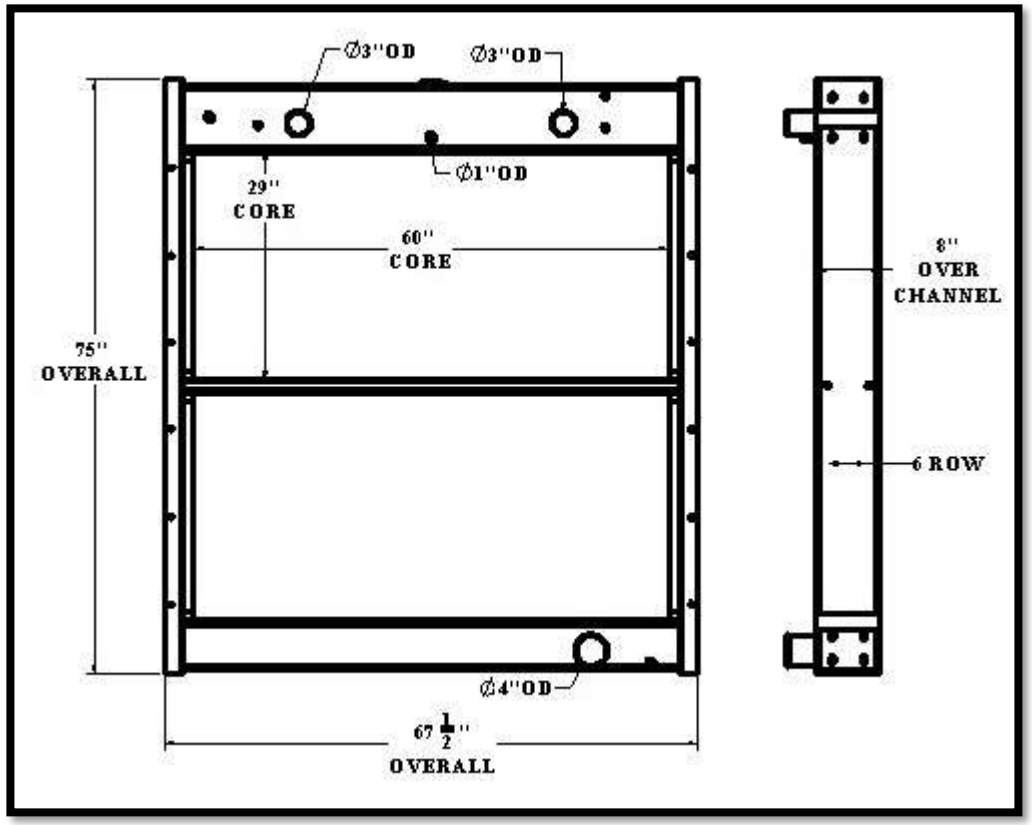

Overall Dimensions: 76” X 67-1/2” X 8”
Core: 29” X 60” X 6 ROW
Inlet: 3”OD, 1”OD
Outlet: 4”OD

Tel 1.800.774.2168
www.bgrradiator.com

BGR Part Number: BT-0262-8I8I
GM50728

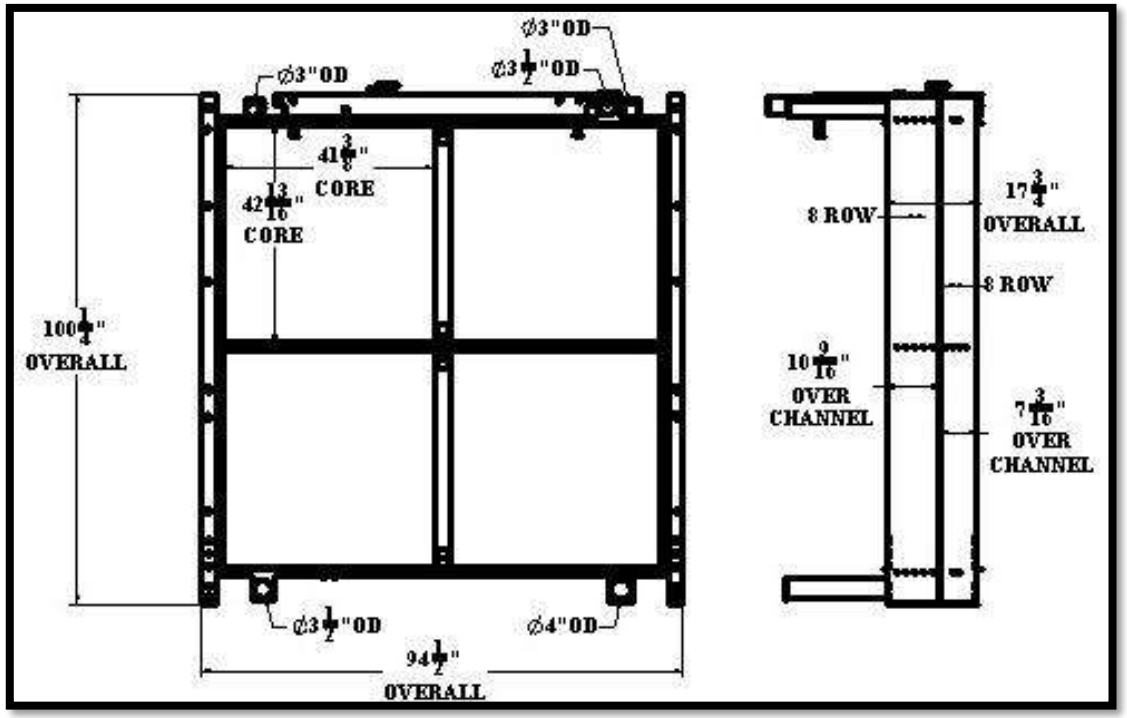

Overall Dimensions: 100-1/4” X 94-1/2” X 17-3/4”
AC Core: 42-13/16” X 41-3/8” X 8 ROW
JW Core:42-13/16” X 41-3/8” X 8 ROW
AC Inlet/Outlet:3-1/2”OD
JW Inlet: 3”OD 2 PL
JW Outlet: 4”OD

Listed dimensions may vary slightly from OE

BGR Part Number: BT-0263-6M

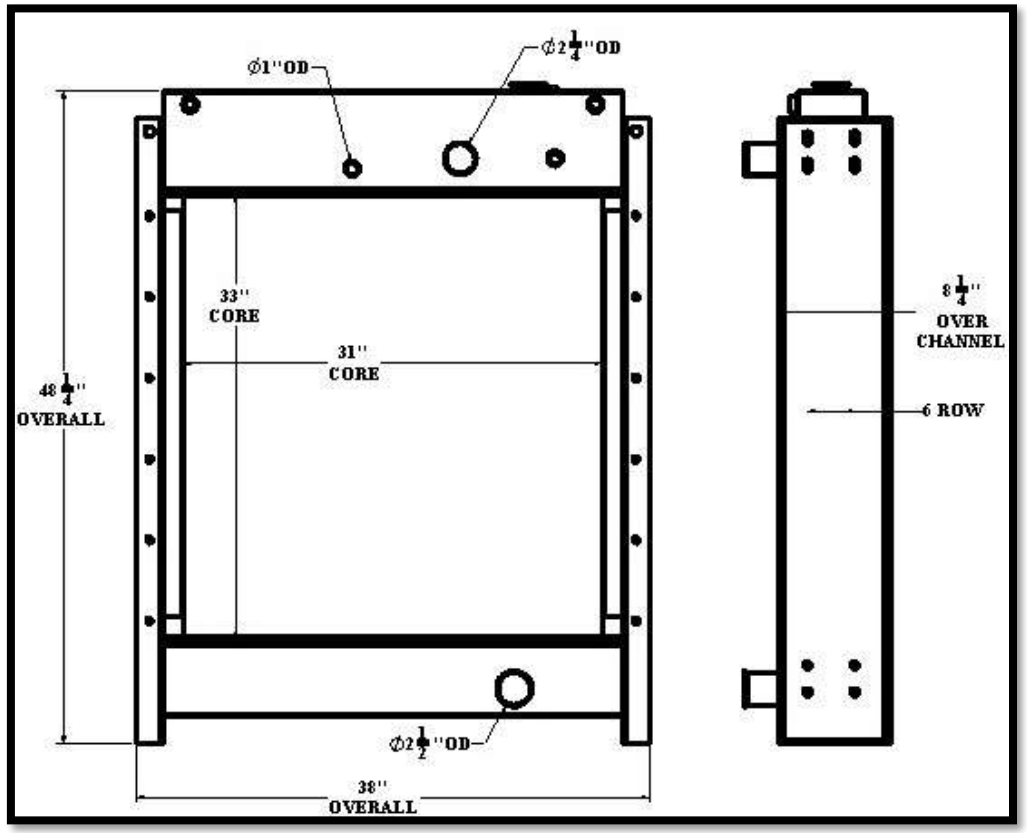

Overall Dimensions: 48-1/4” X 38” X 8-1/4”
Core: 33” X 31” X 6 ROW
Inlet: 2-1/4”OD, 1”OD
Outlet: 2-1/2”OD

Tel 1.800.774.2168
www.bgrradiator.com

BGR Part Number: BT-0264-6M
KATOLIGHT 46706

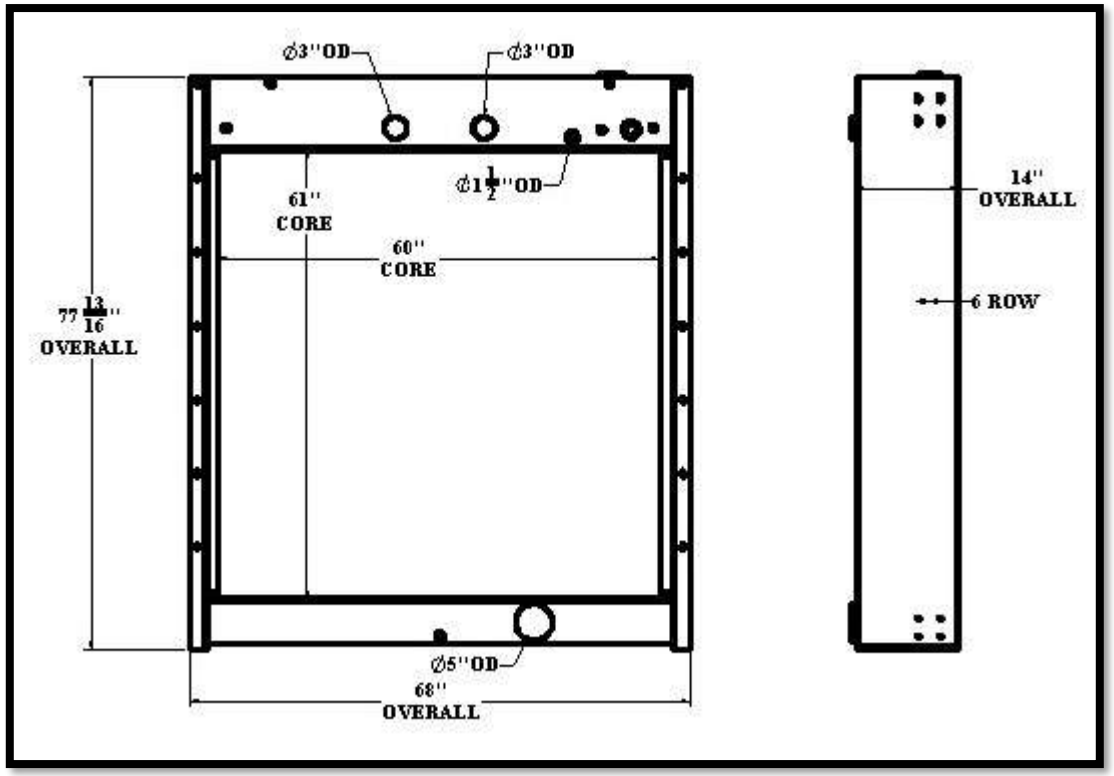

Overall Dimensions: 77-13/16” X 68” X 14”
Core: 61” X 60” X 6 ROW
Inlet: 3”OD 2PL, 1-1/2”OD
Outlet: 5”OD

BT263

Listed dimensions may vary slightly from OE

BT264

BGR Part Number: BT-0265-4M

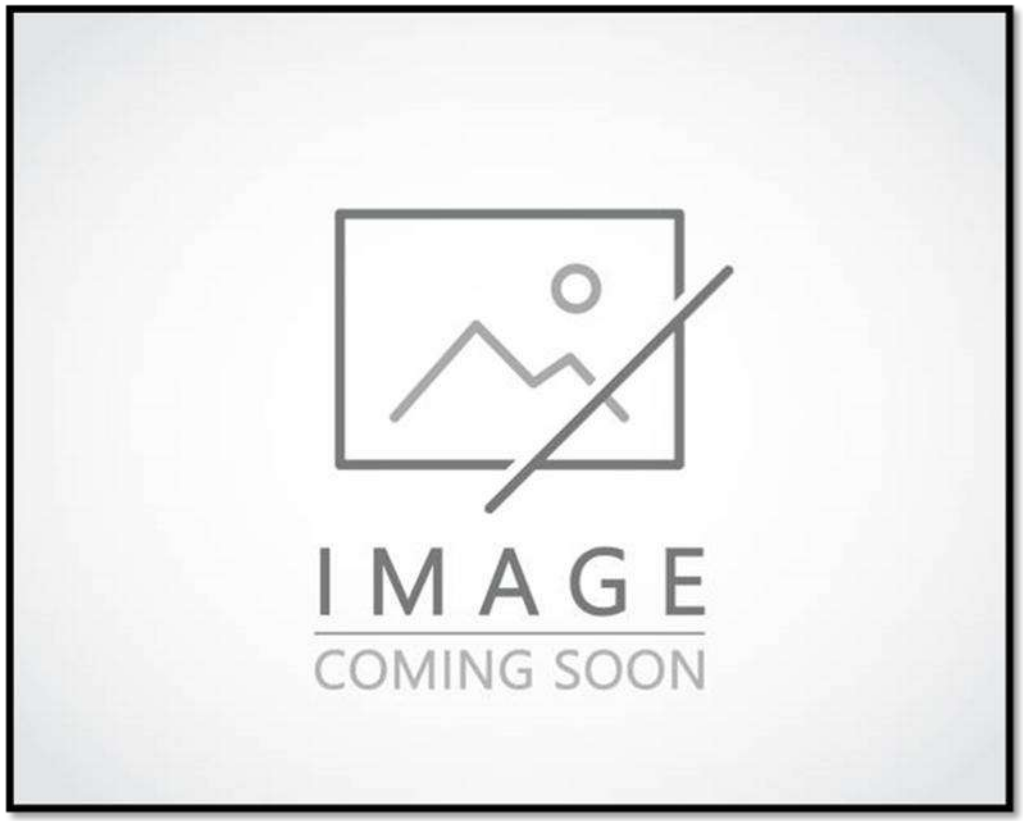

Overall Dimensions:
Core:
Inlet:
Outlet:

Tel 1.800.774.2168
www.bgrradiator.com

BGR Part Number: BT-0266-6M

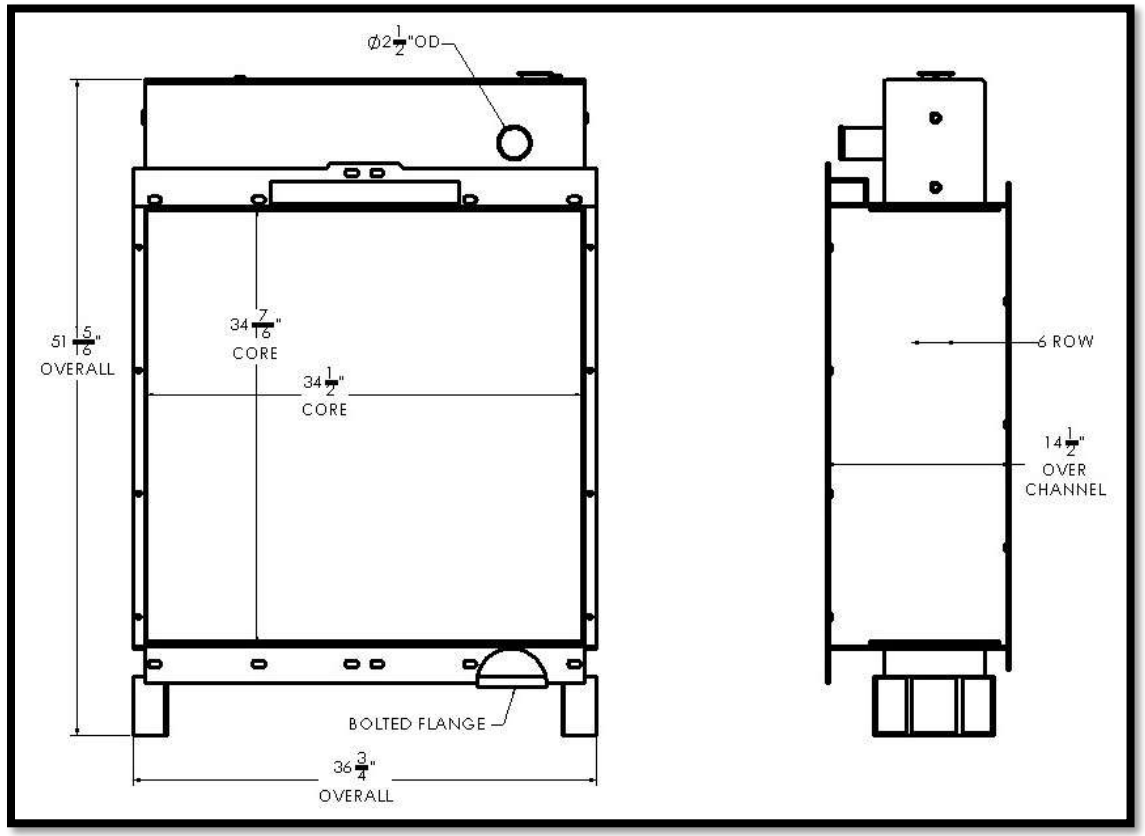

Overall Dimensions: 51-15/16” X 36-3/4” X 14-1/2”
Core: 34-7/16” X 34-1/2” X 6 ROW
Inlet: 2-1/2”OD
Outlet: BOLTED FLANGE

BT265

Listed dimensions may vary slightly from OE

BT266

BGR Part Number: BT-0267-6R
M-12-EF, SP04219

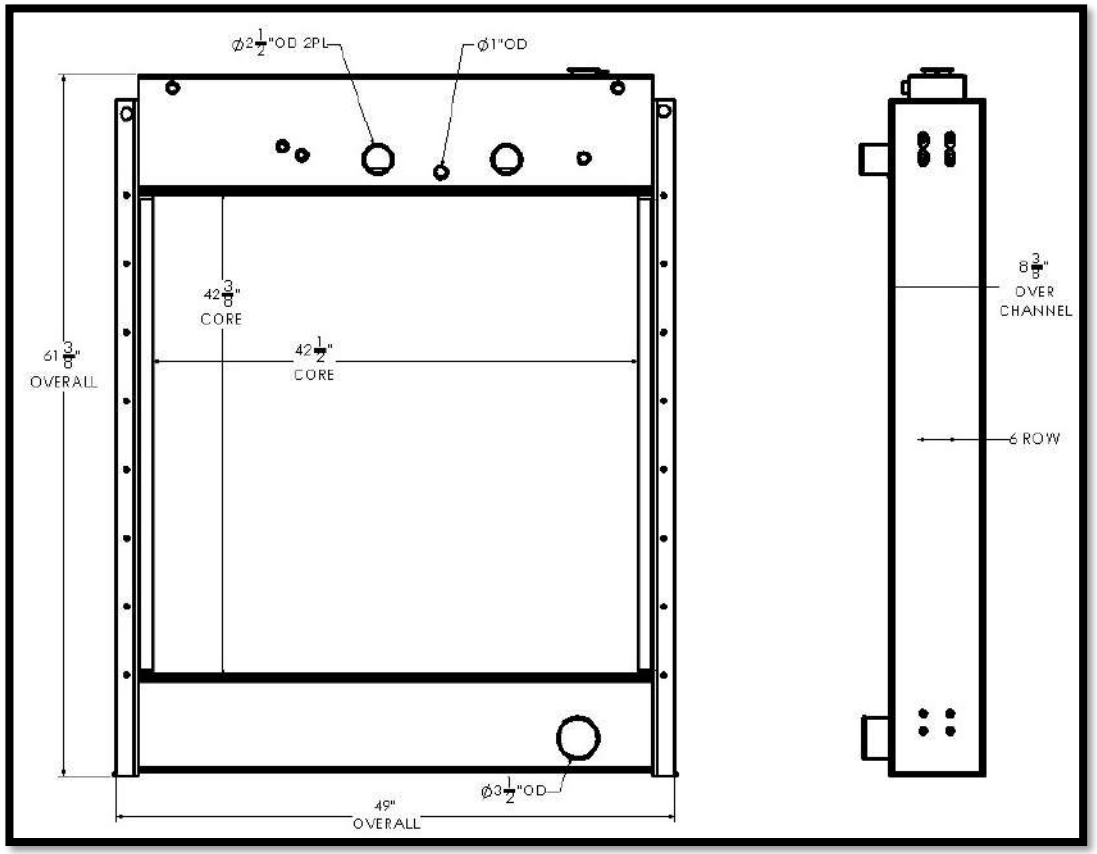

Overall Dimensions: 61-3/8” X 49” X 8-3/8”
Core: 42-3/8” X 42-1/2” X 6 ROW
Inlet: 2-1/2”OD 2 PL, 1”OD
Outlet: 3-1/2”OD

Tel 1.800.774.2168
www.bgrradiator.com

BGR Part Number: BT-0268-8I
180-4423-01

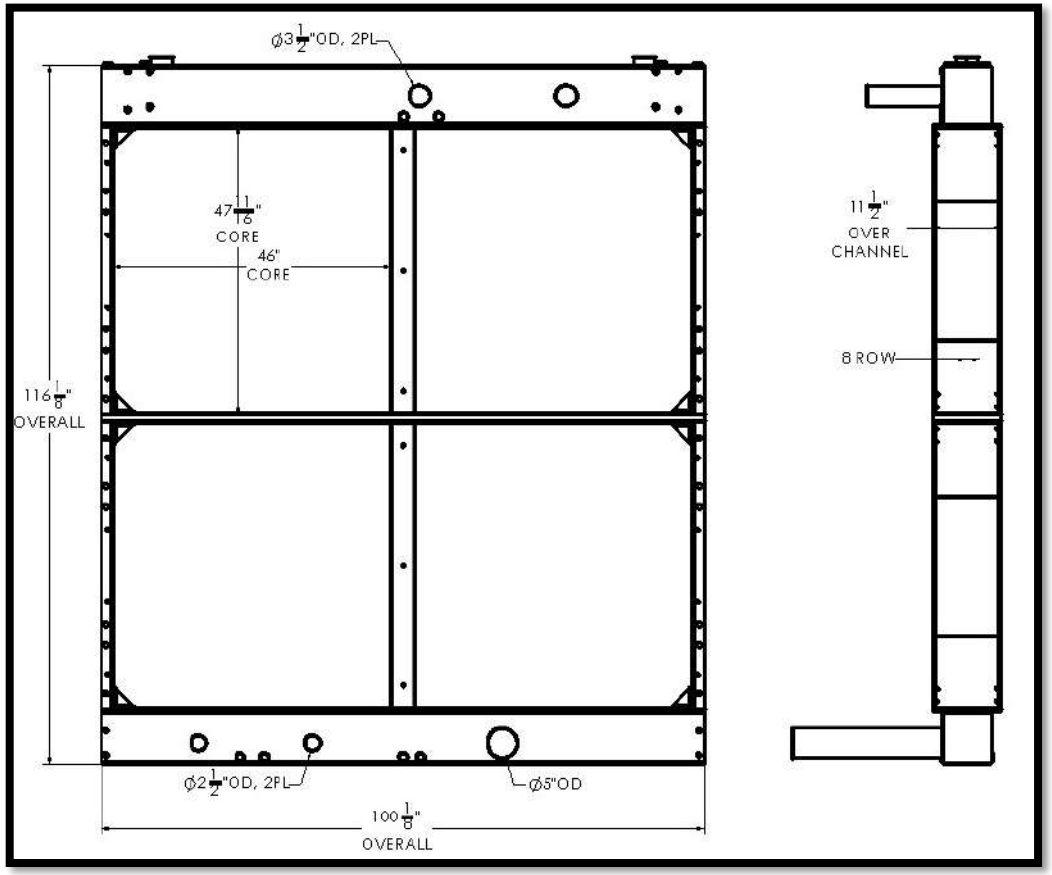

Overall Dimensions: 116-1/8” X 100-1/8” X 11-1/2”
Core: 47-11/16” X 46” X 8 ROW
Inlet: 3-1/2”OD 2PL
Outlet: 5”OD, 2-1/2”OD 2 PL

BT267

Listed dimensions may vary slightly from OE

BT268

BGR Part Number: BT-0269-8I
M-25-EF, 1A11187

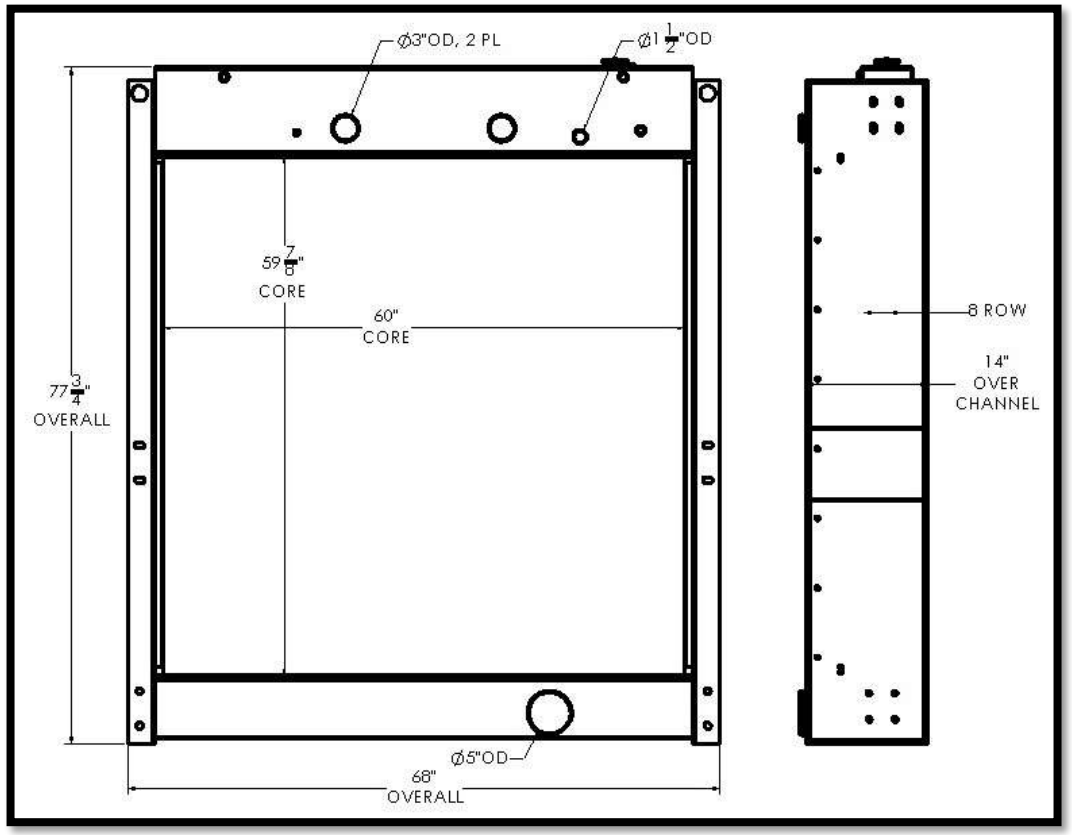

Overall Dimensions: 77-3/4” X 68” X 14”
Core: 59-7/8” X 60” X 8 ROW
Inlet: 3”OD 2PL, 1-1/2”OD
Outlet: 5”OD

Tel 1.800.774.2168
www.bgrradiator.com

BGR Part Number: BT-0270-8I

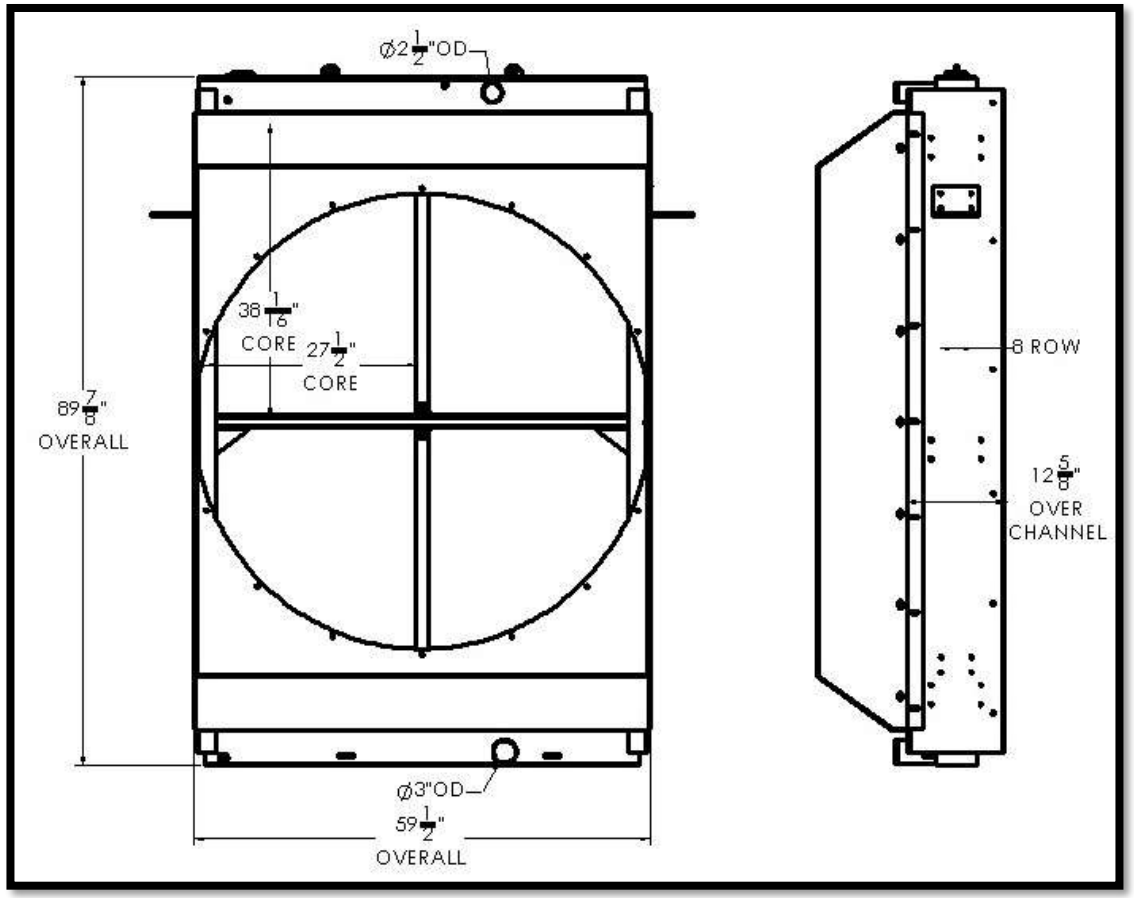

Overall Dimensions: 89-7/8” X 59-1/2” X 12-5/8”
Core: 38-1/16” X 27-1/2” X 8 ROW
Inlet: 2-1/2”OD
Outlet: 3”OD

BT269

Listed dimensions may vary slightly from OE

BT270

BGR Part Number: BT-0271-8I8I

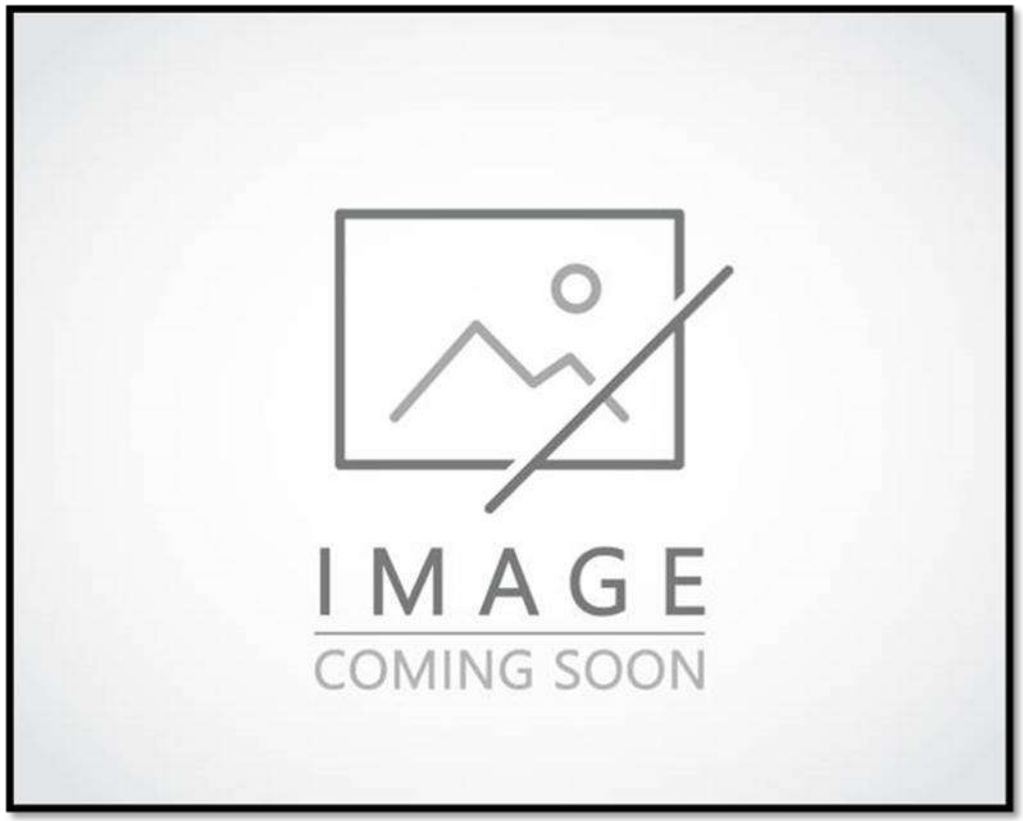

Overall Dimensions:
Core:
Inlet:
Outlet:

Tel 1.800.774.2168
www.bgrradiator.com

BGR Part Number: BT-0272-8I
249-0301

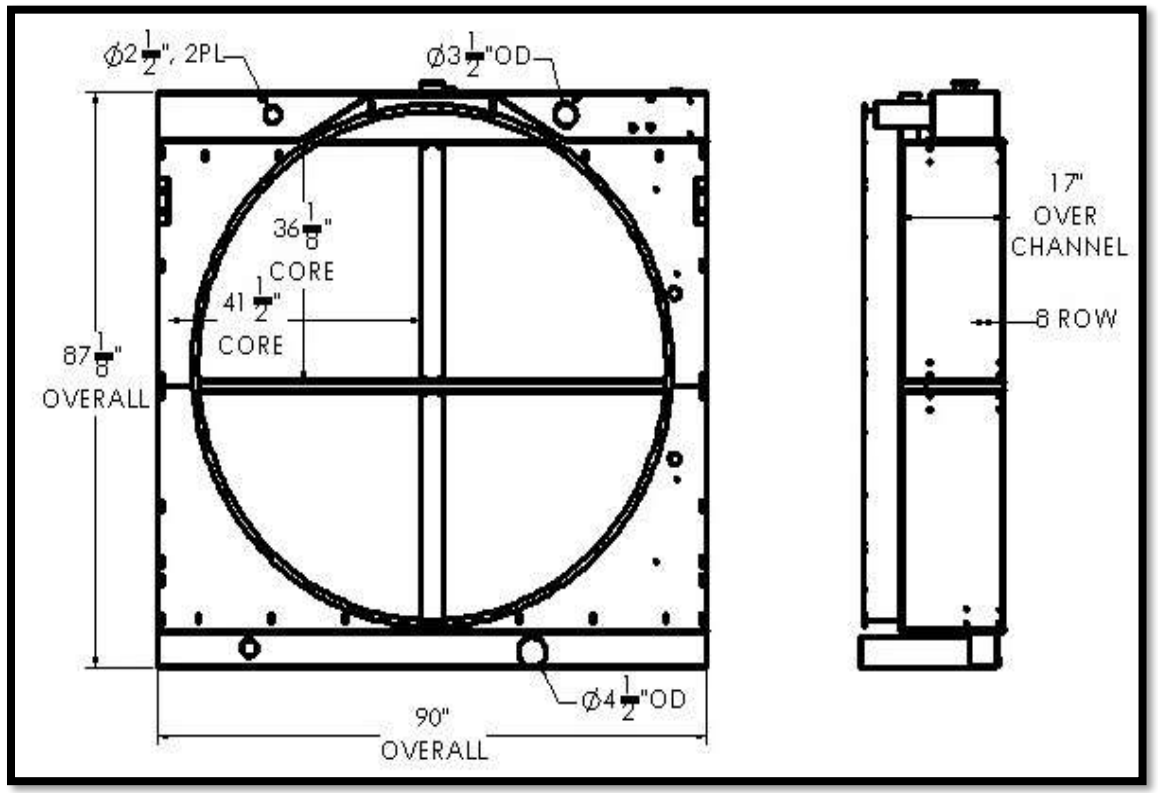

Overall Dimensions: 87-1/8” X 90” X 17”
Core: 36-1/8” X 41-1/2” X 8 ROW
Inlet:2-1/2”OD, 3-1/2”OD
Outlet: 2-1/2”OD, 4-1/2”OD

Listed dimensions may vary slightly from OE

BGR Part Number: BT-0273-6M
9117200

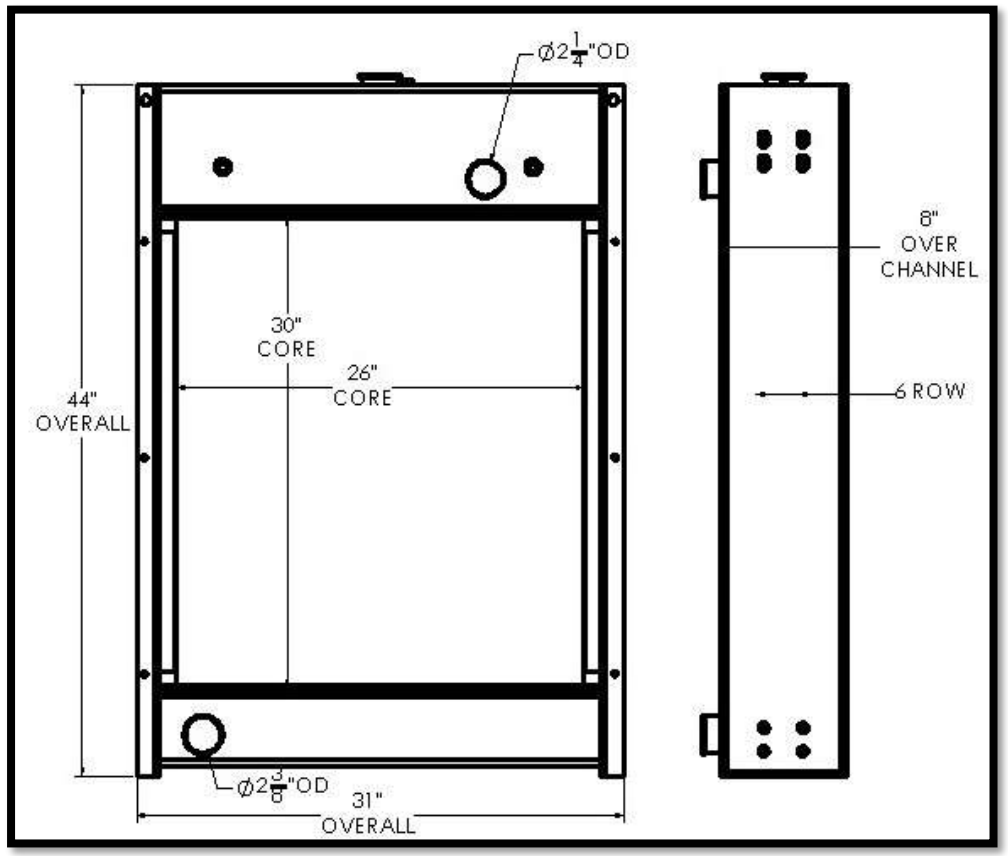

Overall Dimensions: 44” X 31” X 8”
Core: 30” X 26” X 6 ROW
Inlet: 2-1/4”OD
Outlet: 2-3/8”OD

Tel 1.800.774.2168
www.bgrradiator.com

BGR Part Number: BT-0274-8I8I

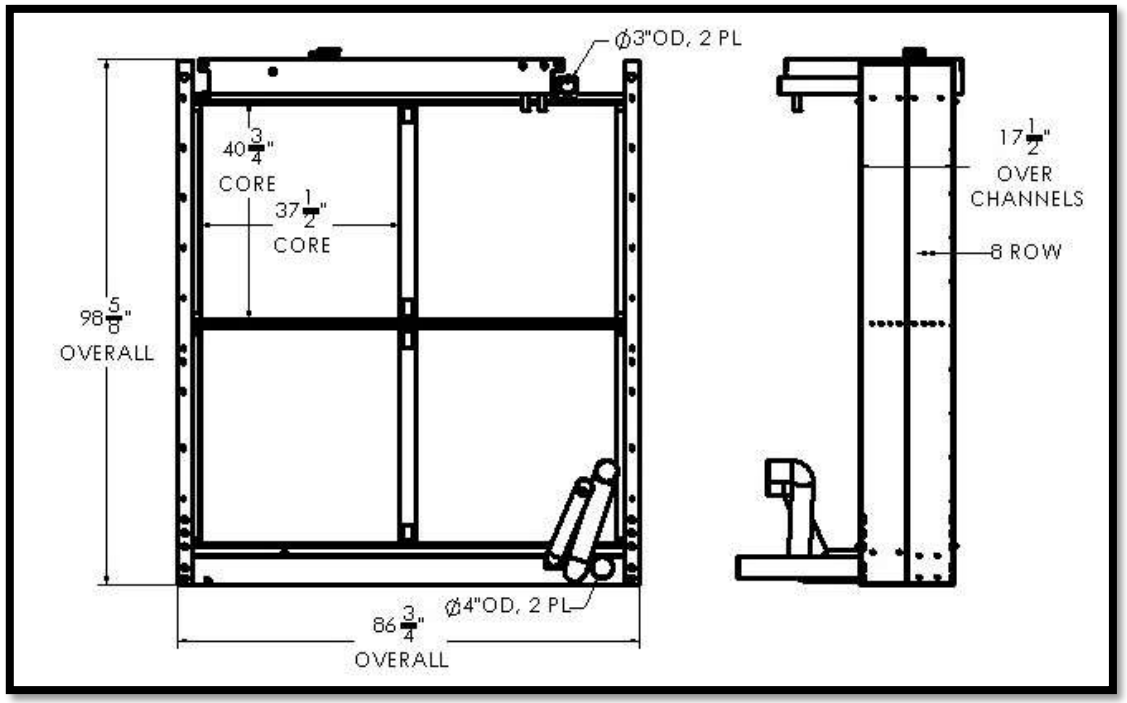

Overall Dimensions: 98-5/8” X 86-3/4” X 17-1/2”
Core: 40-3/4” X 37-1/2” X 8 ROW
AC Inlet/Outlet:3”OD
JW Inlet/Outlet:4”OD

Listed dimensions may vary slightly from OE

BGR Part Number: BT-0275-6M

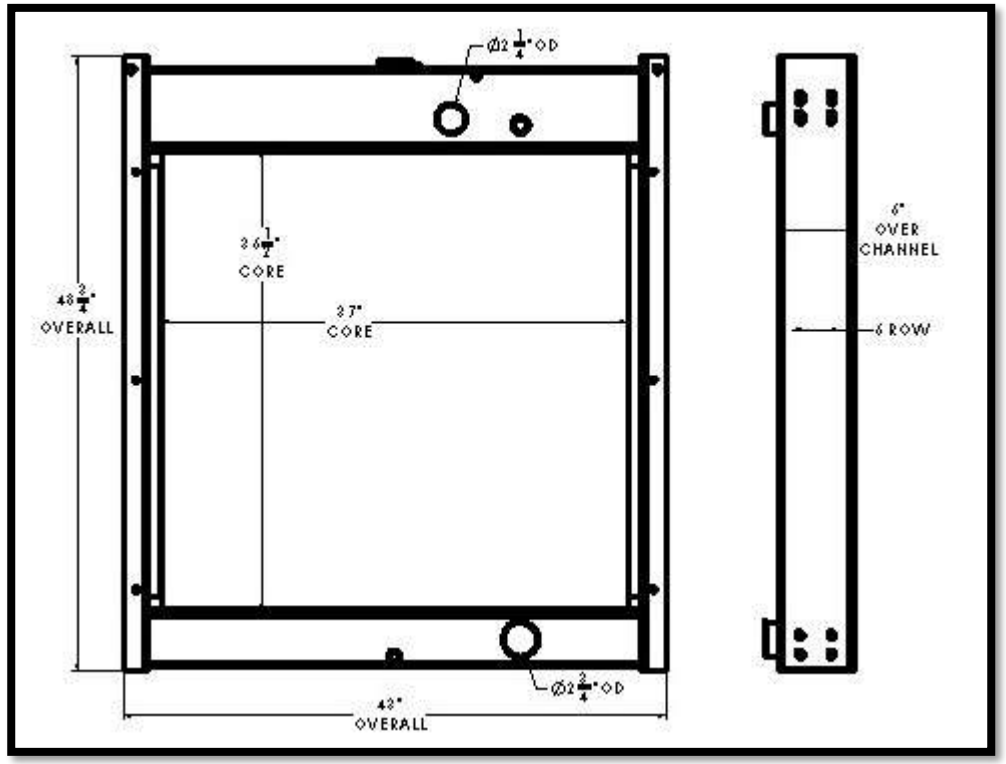

Overall Dimensions: 48-3/4” X 43” X 6”
Core: 36-1/2” X 37” X 6 ROW
Inlet: 2-1/4”OD
Outlet: 2-3/4”OD

Tel 1.800.774.2168
www.bgrradiator.com

BGR Part Number: BT-0276-5R

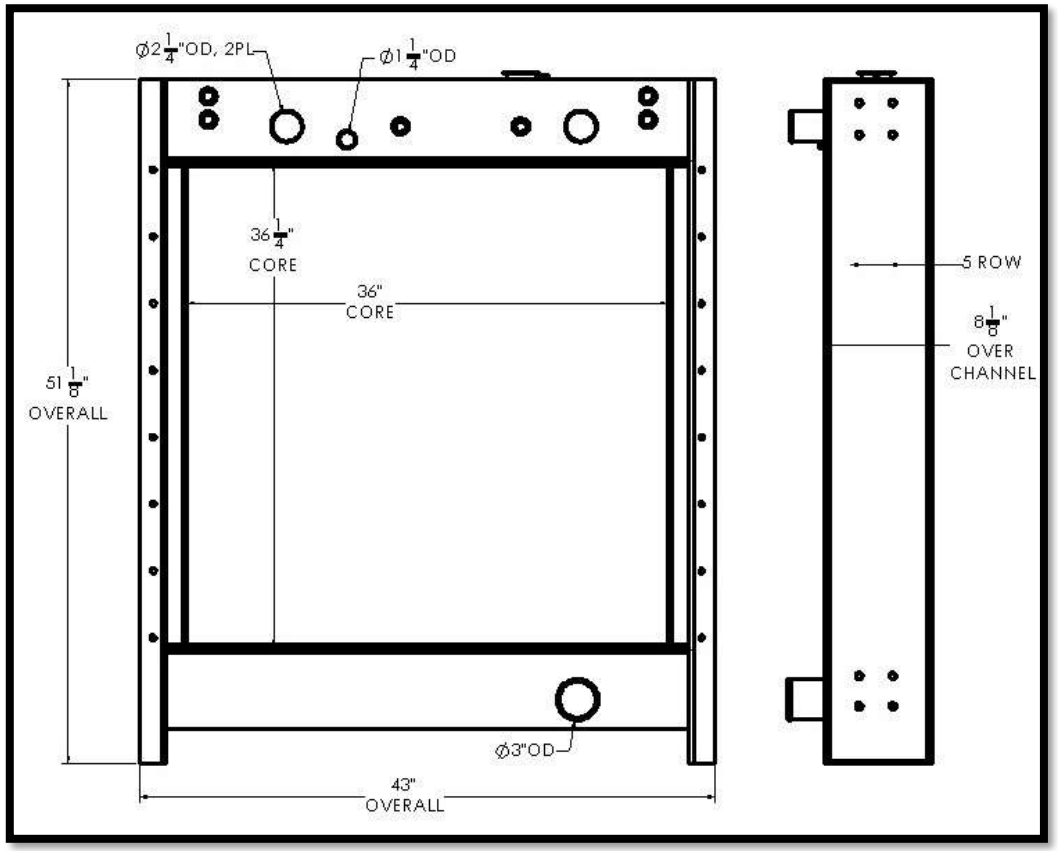

Overall Dimensions:51-1/8” X 43” X 8-1/8”
Core: 36-1/4” X 36” X 5 ROW
Inlet: 2-1/4”OD 2PL, 1-1/4”OD
Outlet: 3”OD

BT275

Listed dimensions may vary slightly from OE

BT276

BGR Part Number: BT-0277-8I8I

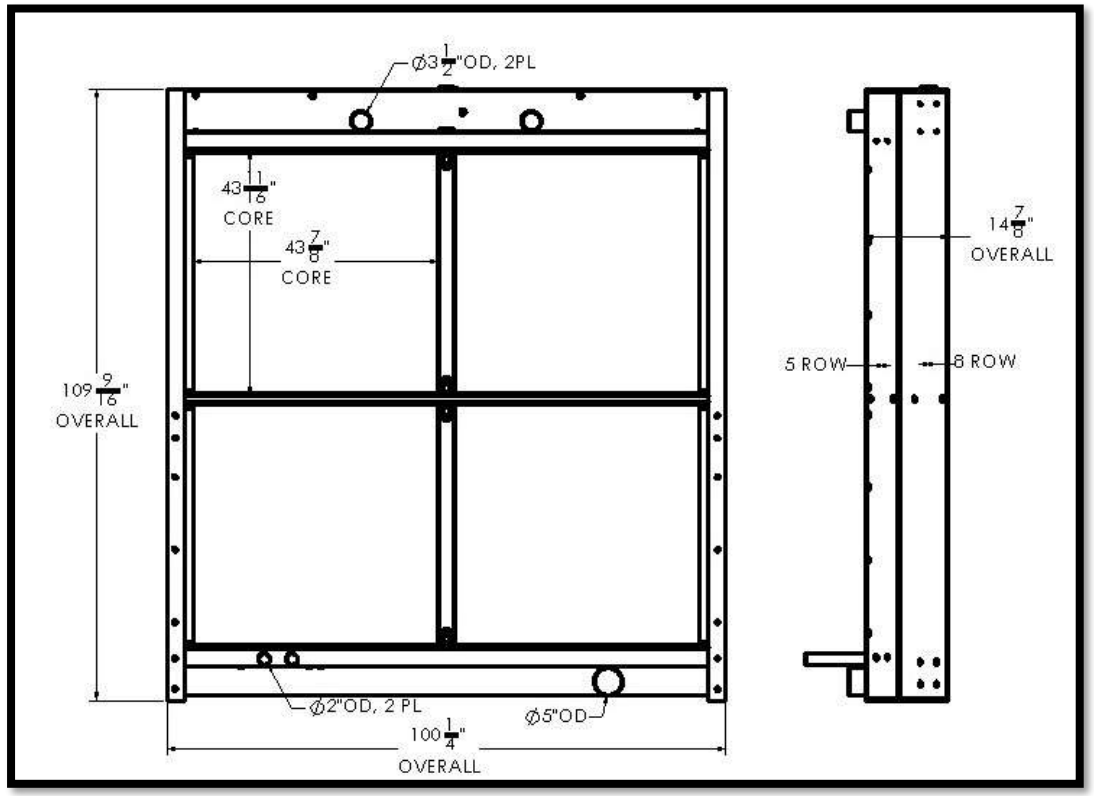

Overall Dimensions: 109-9/16” X 100-1/4” X 14-7/8”
AC Core: 43-11/16 X 43-7/8” X 5 ROW
JW Core: 43-11/16 X 43-7/8” X 8 ROW
AC Inlet/Outlet: 2”OD, 2PL
JW Inlet:3-1/2”OD, 2PL
JW Outlet: 5”OD

Tel 1.800.774.2168
www.bgrradiator.com

BGR Part Number: BT-0278-7T

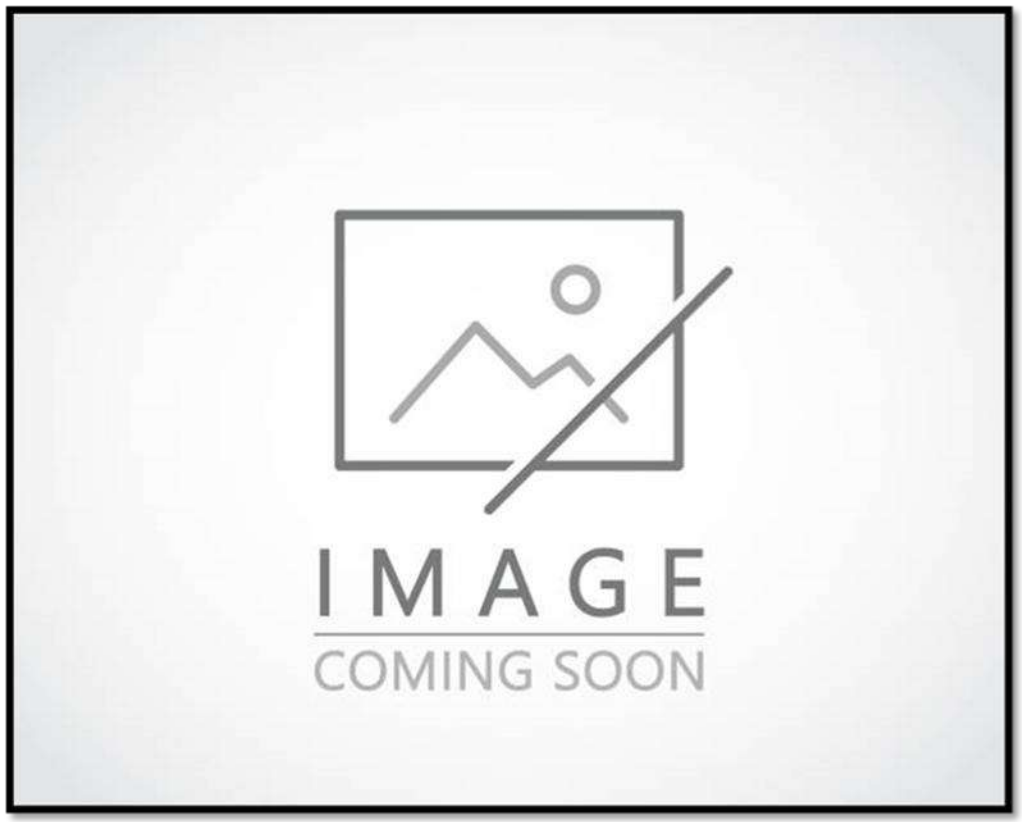

Overall Dimensions:
Core:
Inlet:
Outlet:

Listed dimensions may vary slightly from OE

BGR Part Number: BT-0279-6M
1542VV

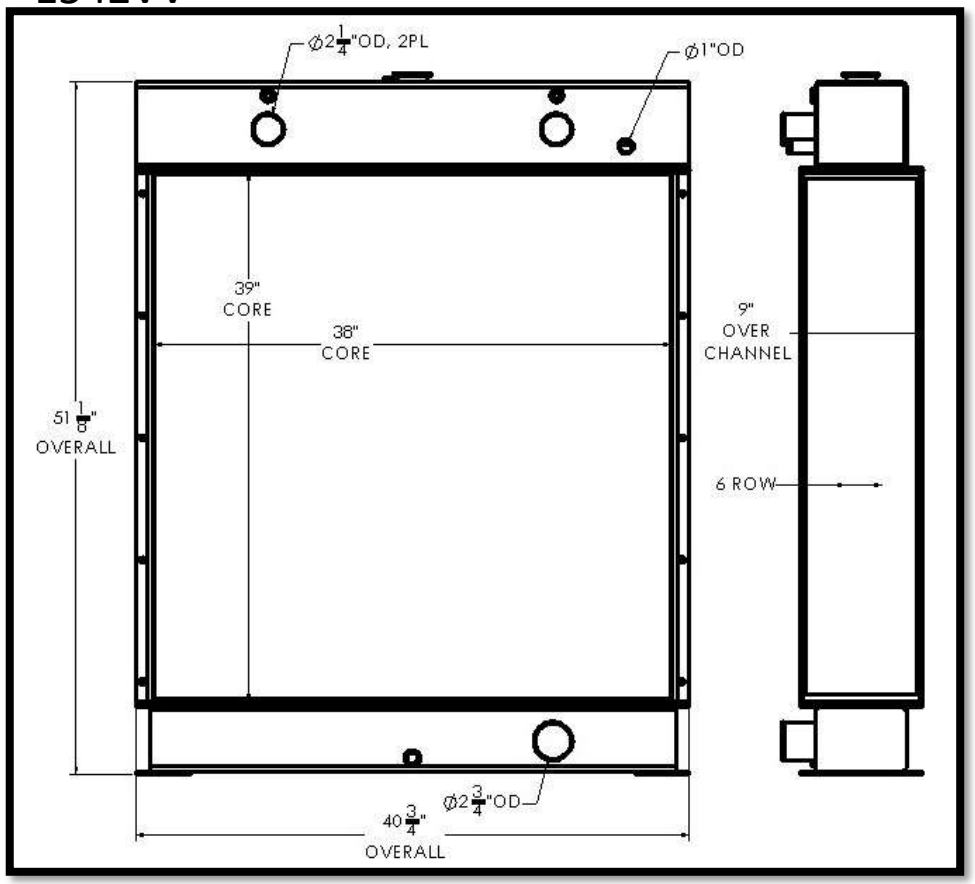

Overall Dimensions: 51-1/8” X 40-3/4” X 9”
Core: 39” X 38” X 6 ROW
Inlet: 2-1/4”OD, 2PL, 1”OD
Outlet: 2-3/4”OD

Tel 1.800.774.2168
www.bgrradiator.com

BGR Part Number: BT-0280-8I
2A17568

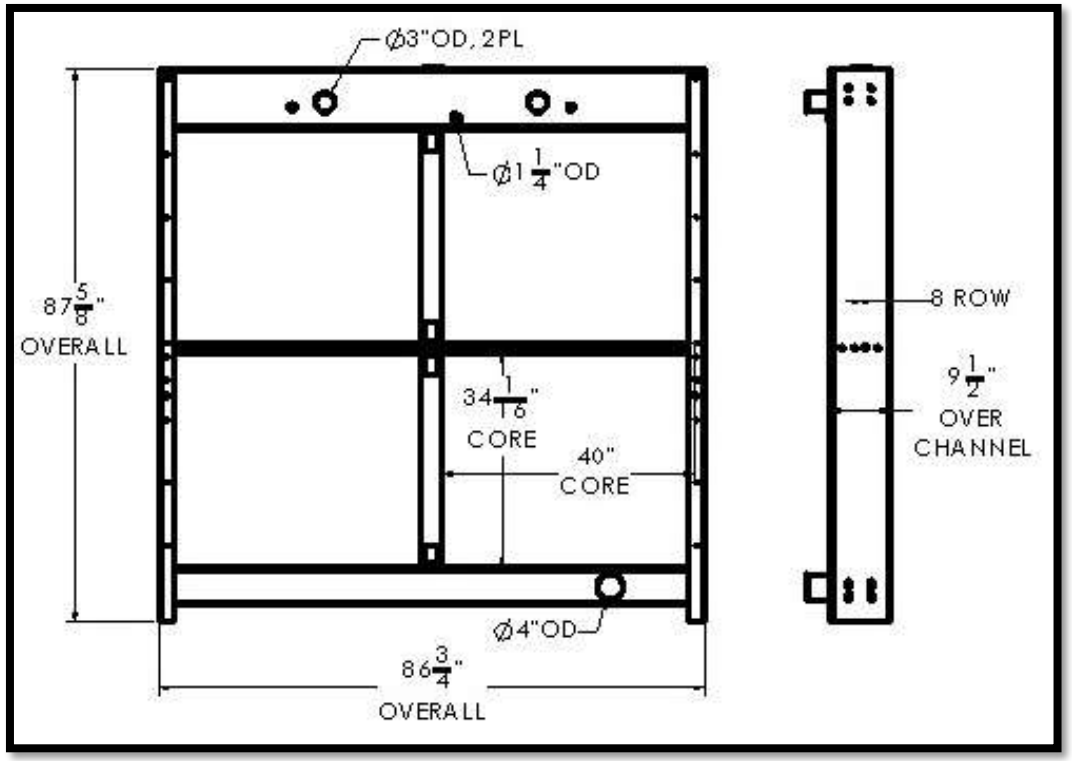

Overall Dimensions: 87-5/8” X 86-3/4” X 9-1/2”
Core: 34-1/16” X 40” X 8 ROW
Inlet: 3”OD 2PL, 1-1/4”OD
Outlet: 4”OD

BT279

Listed dimensions may vary slightly from OE

BT280

BGR Part Number: BT-0281-7M

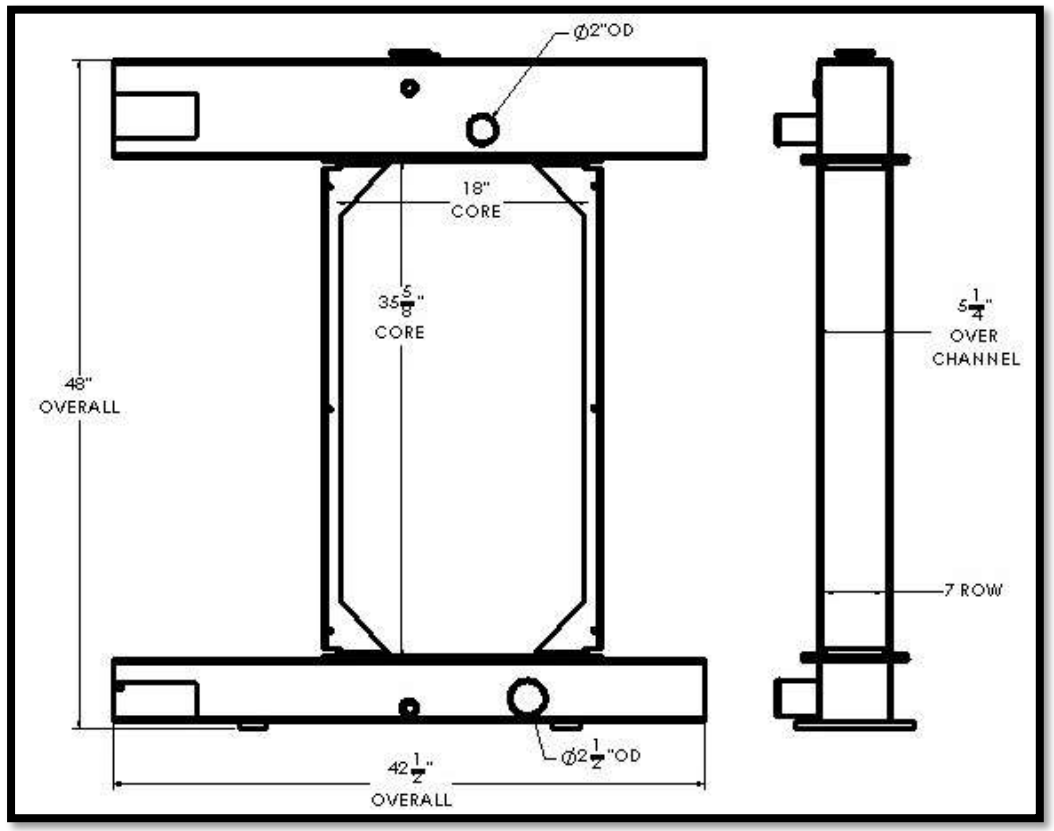

Overall Dimensions:48” X 42-1/2” X 5-1/4”
Core: 35-5/8” X 18” X 7 ROW
Inlet: 2”OD
Outlet: 2-1/2”OD

Tel 1.800.774.2168
www.bgrradiator.com

BGR Part Number: BT-0282-8I8I

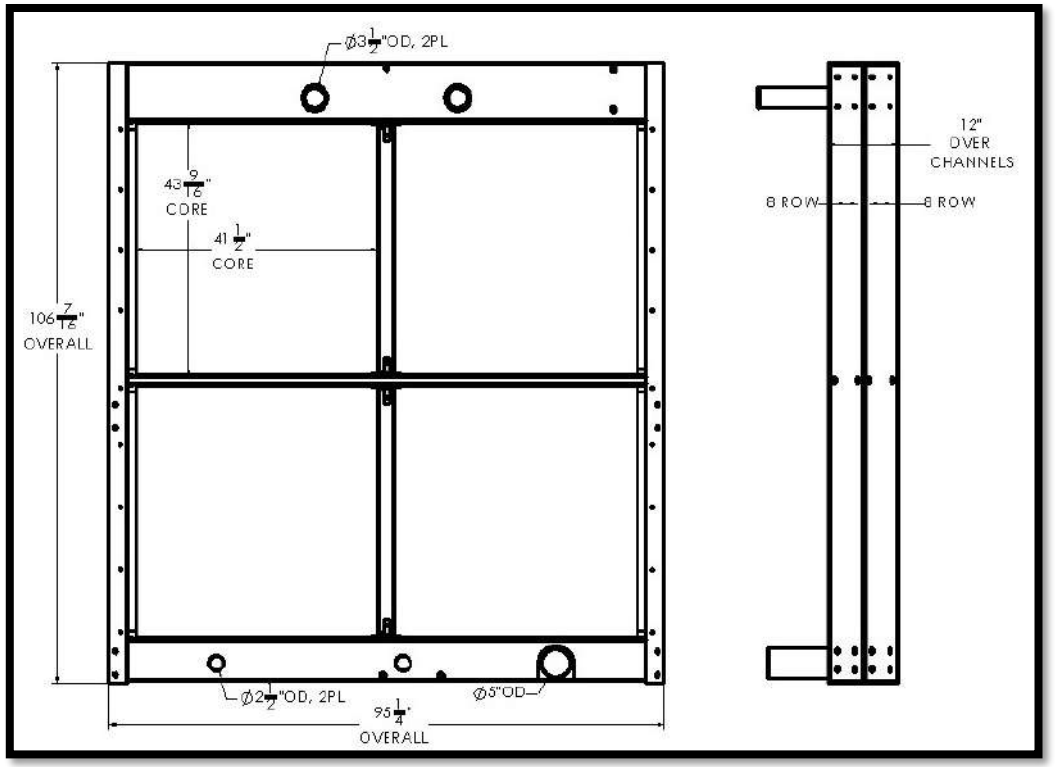

Overall Dimensions: 106-7/16” X 95-1/4” X 12”
Core: 43-9/16” X 41-1/2” X 8 ROW
JW Inlet: 3-1/2”OD,2 PL
JW Outlet: 5”OD
AC Inlet/Outlet: 2-1/2”OD,2PL

BT281

Listed dimensions may vary slightly from OE

BT282

BGR Part Number:BT-0283-7M

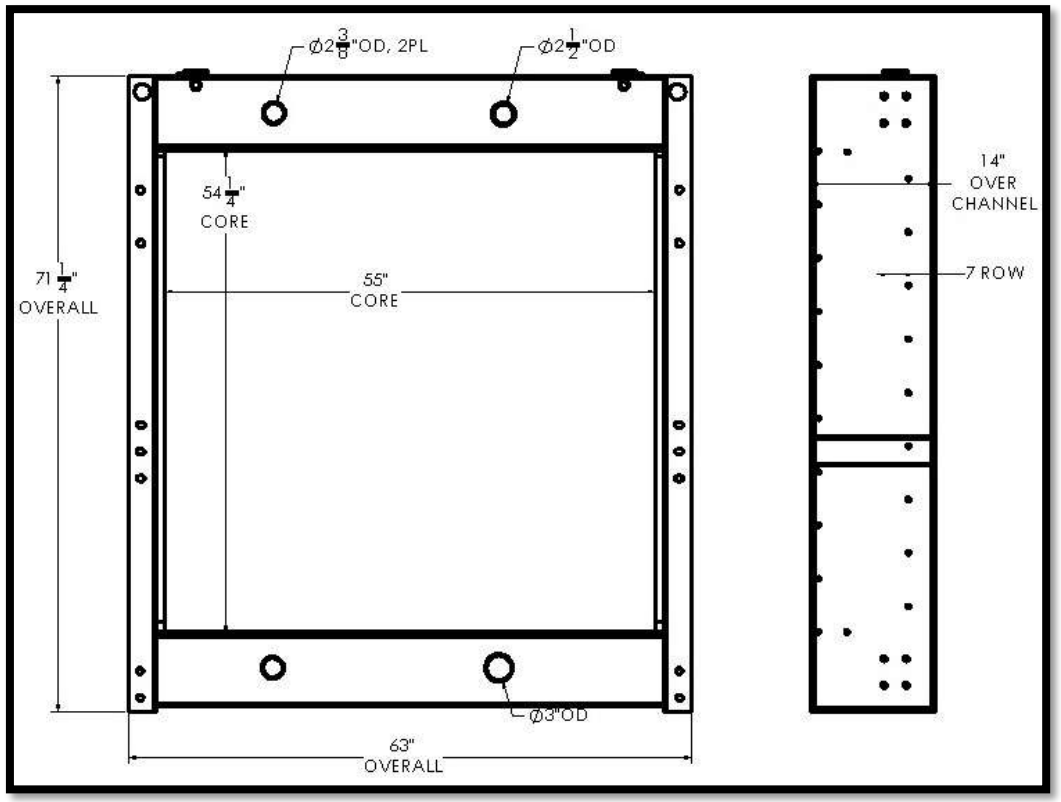

Overall Dimensions: 71-1/4” X 63” X 14”
Core: 54-1/4” X 55” X 7 ROW
Inlet: 2-3/8”OD, 2-1/2”OD
Outlet: 2-3/8”OD, 3”OD

Tel 1.800.774.2168
www.bgrradiator.com

BGR Part Number: BT-0284-6M

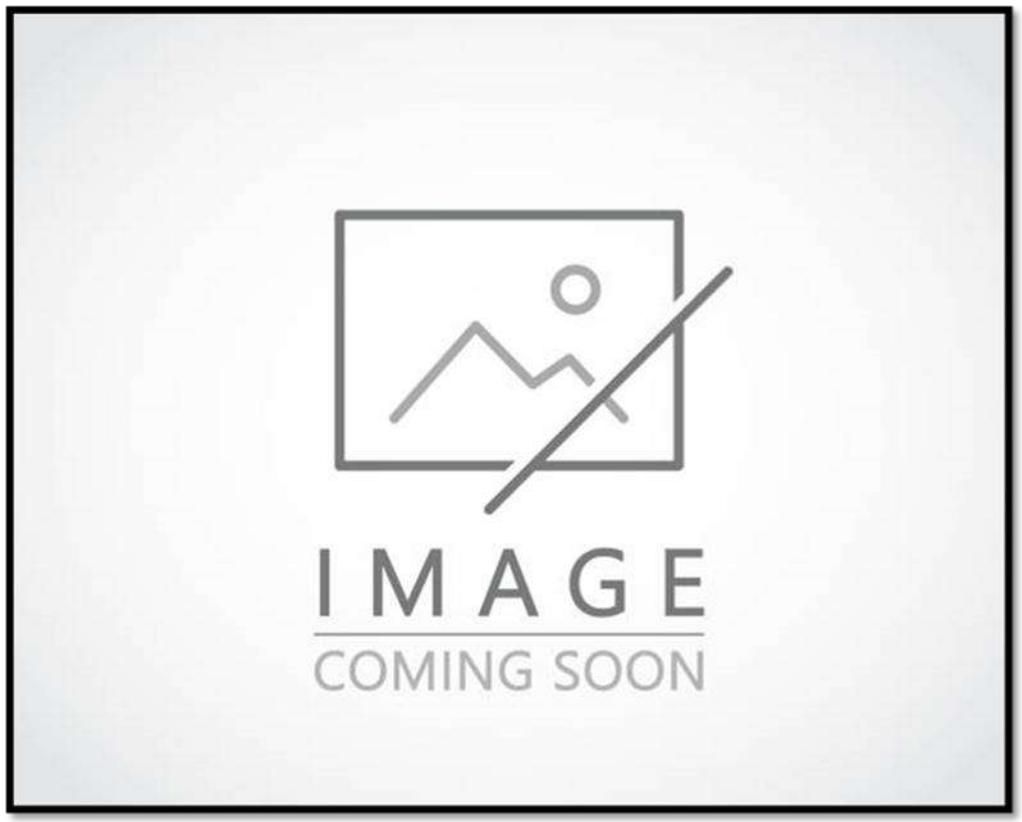

Overall Dimensions:
Core:
Inlet:
Outlet:

Listed dimensions may vary slightly from OE

BGR Part Number: BT-0285-6T

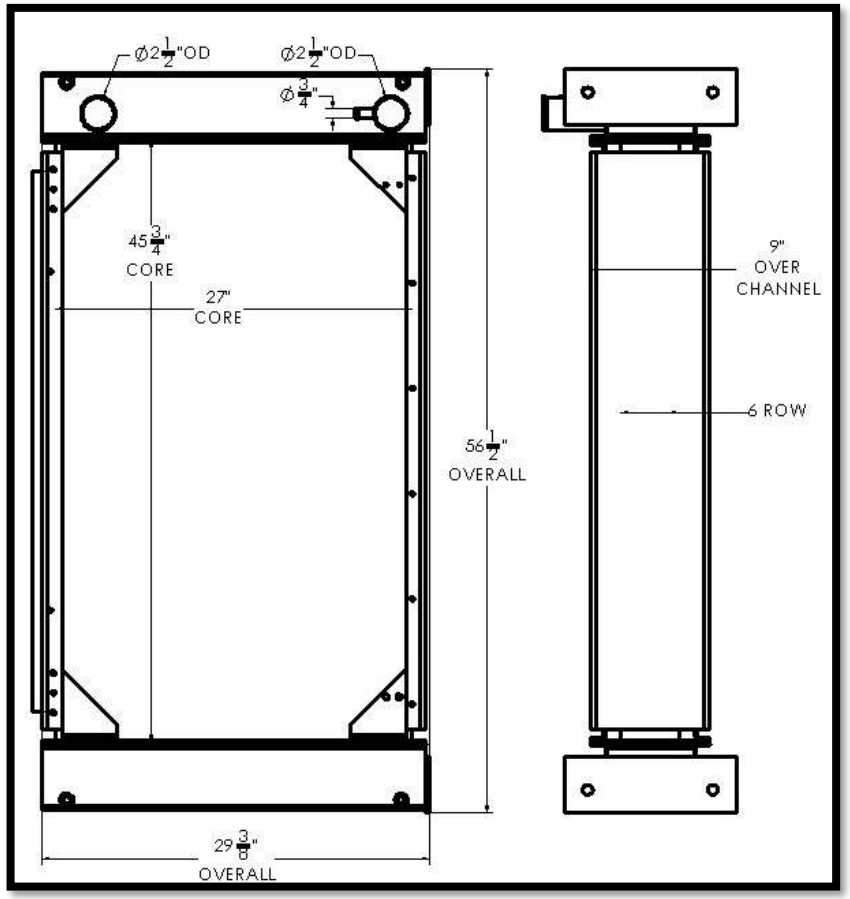

Overall Dimensions: 56-1/2” X 29-3/8” X 9”
Core: 45-3/4” X 27” X 6 ROW
Inlet: 2-1/2”OD
Outlet: 2-1/2”OD, ¾”OD

Tel 1.800.774.2168
www.bgrradiator.com

BGR Part Number: BT-0286-7M

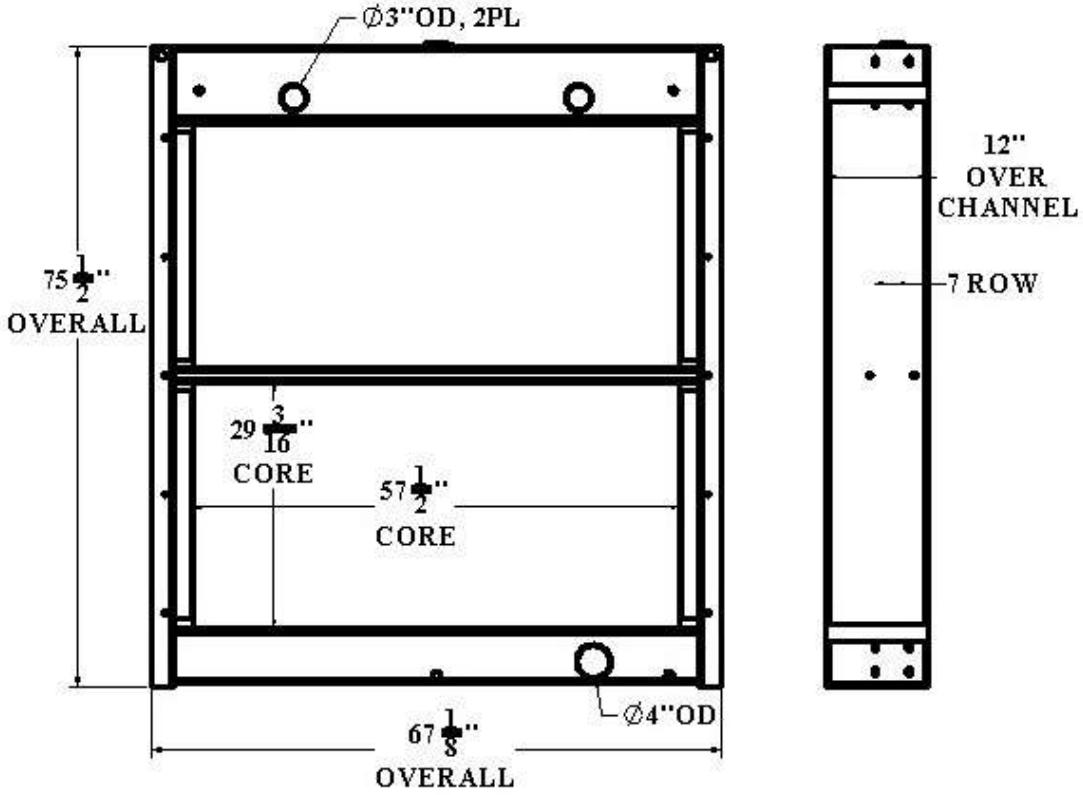

Overall Dimensions: 75-1/2” X 67-1/8” X 12”
Core: 29-3/16” X 57-1/2” X 7 ROW
Inlet: 3”OD, 2PL
Outlet: 4”OD

BT285

Listed dimensions may vary slightly from OE

BT286

BGR Part Number: BT-0287-4M
120445

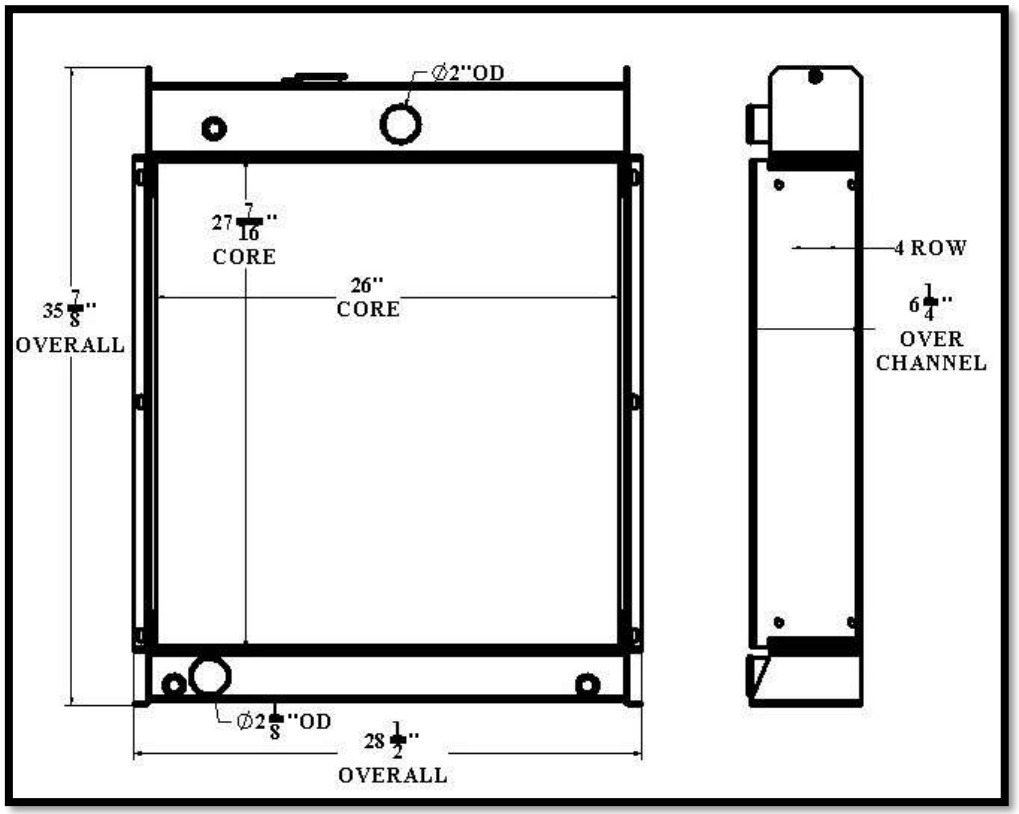

Overall Dimensions: 35-7/8” X 28-1/2” X 6-1/4”
Core: 27-7/16” X 26” X 4 ROW
Inlet: 2”OD
Outlet: 2-1/8”OD

Tel 1.800.774.2168
www.bgrradiator.com

BGR Part Number: BT-0288-8M

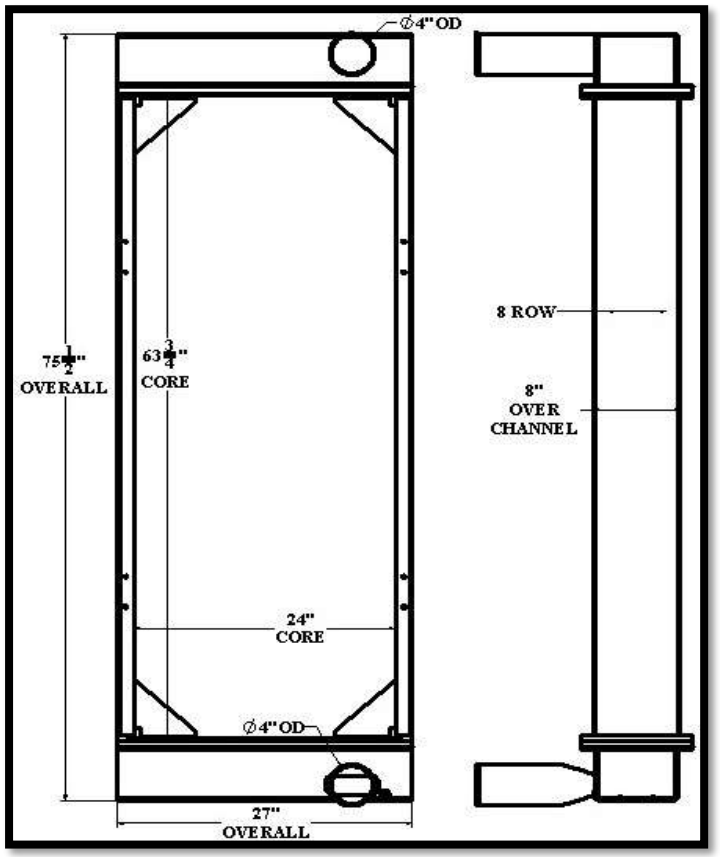

Overall Dimensions: 75-1/2” X 27” X 8”
Core: 63-3/4” X 24” X 8 ROW
Inlet: 4”OD
Outlet: 4”OD

BT287

Listed dimensions may vary slightly from OE

BT288

BGR Part Number: BT-0289-6T

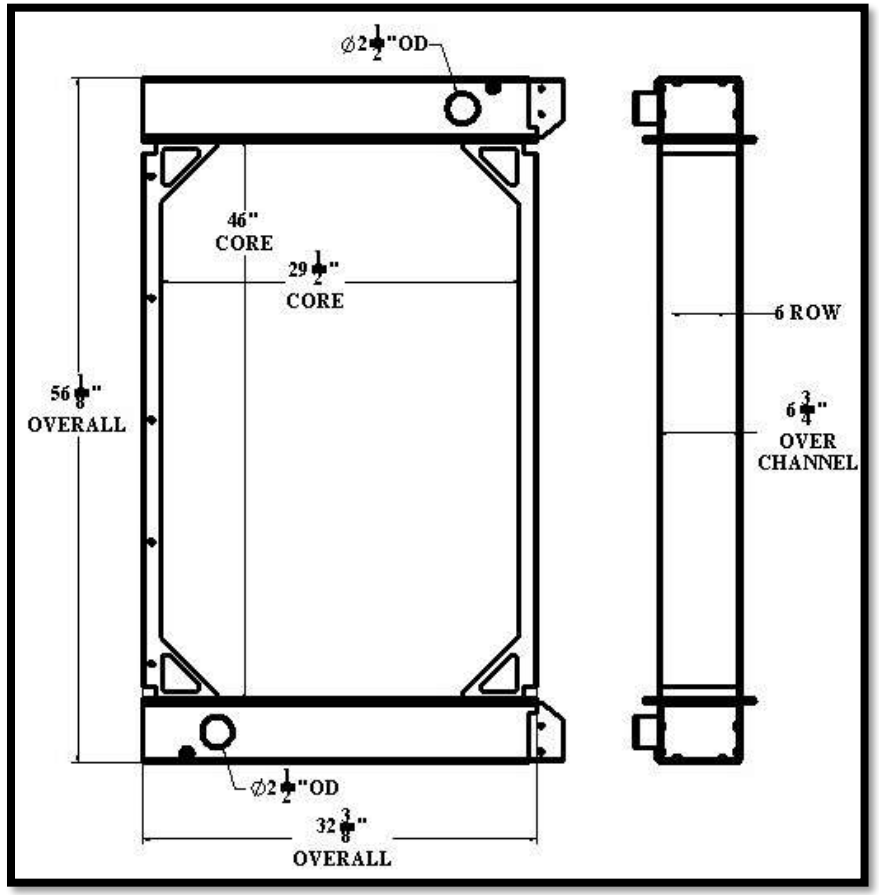

Overall Dimensions: 56-1/8” X 32-3/8” X 6-3/4”
Core: 46” X 29-1/2” X 6 ROW
Inlet: 2-1/2”OD
Outlet:2-1/2”OD

Tel 1.800.774.2168
www.bgrradiator.com

BGR Part Number: BT-0290-6M
RSA279606

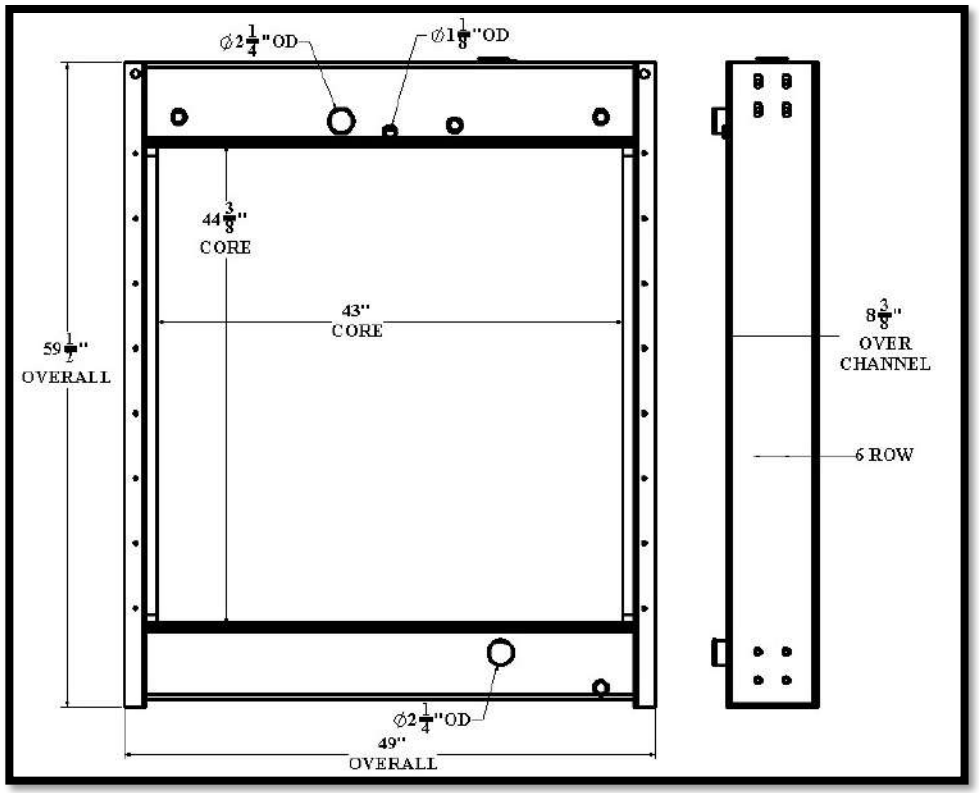

Overall Dimensions: 59-1/2” X 49” X 8-3/8”
Core: 44-3/8” X 43” X 6 ROW
Inlet: 2-1/4”OD, 1-1/8”OD
Outlet: 2-1/4”OD

BT289

Listed dimensions may vary slightly from OE

BT290

BGR Part Number: BT-0291-6M

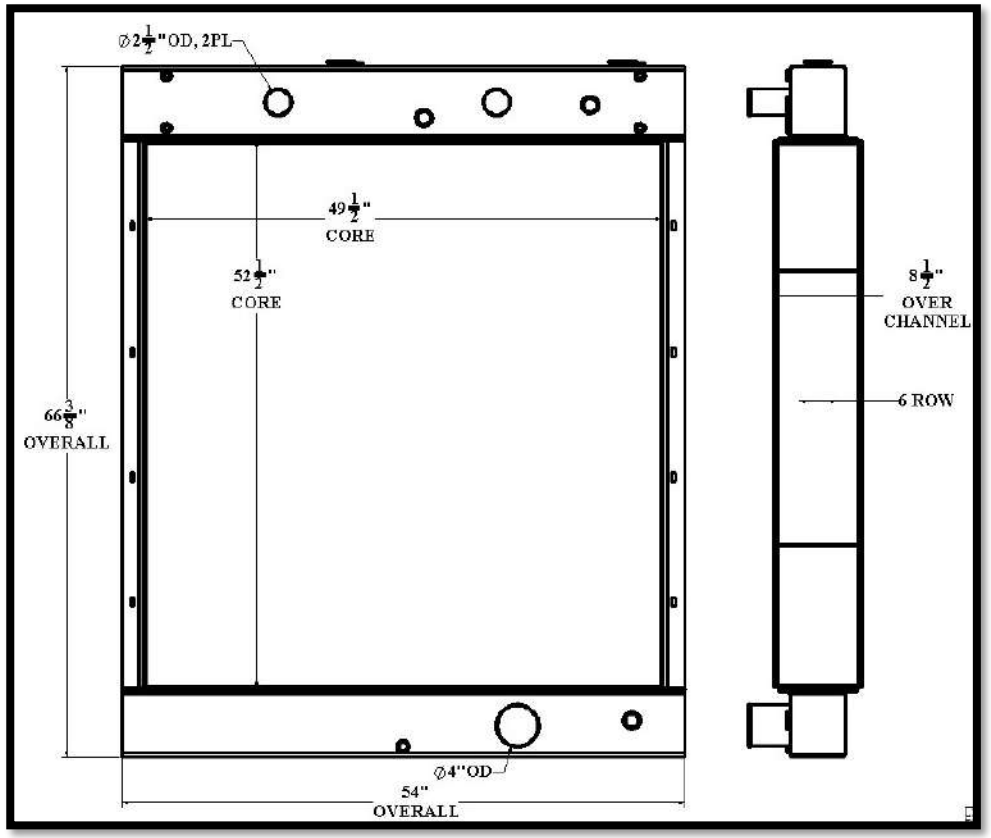

Overall Dimensions: 66-3/8” X 54” X 8-1/2”
Core: 52-1/2” X 49-1/2” X 6 ROW
Inlet: 2-1/2”OD, 2PL
Outlet: 4”OD

Tel 1.800.774.2168
www.bgrradiator.com

BGR Part Number: BT-0292-7M

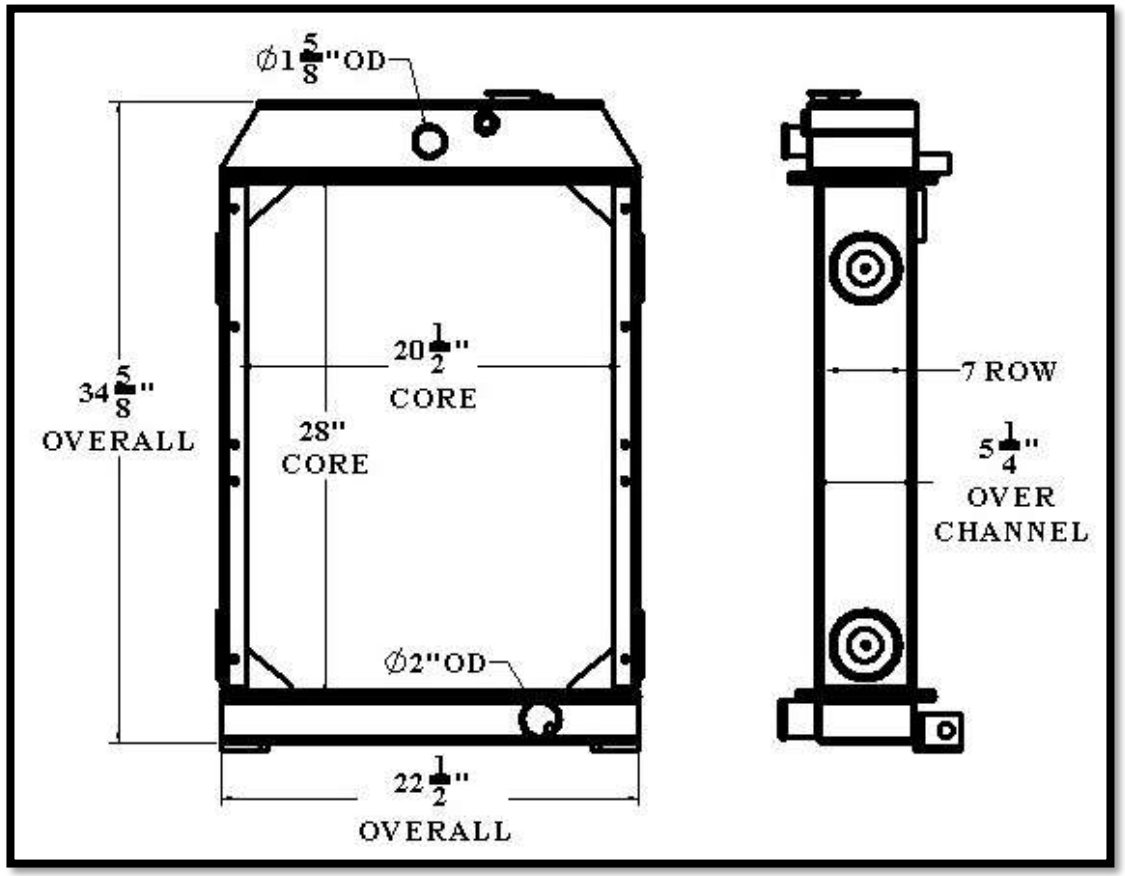

Overall Dimensions: 34-5/8” X 22-1/2” X 5-1/4”
Core: 28” X 20-1/2” X 7 ROW
Inlet: 1-5/8”OD
Outlet: 2”OD

BT291

Listed dimensions may vary slightly from OE

BT292

BGR Part Number: BT-0293-4T

HRJW205TC HIPOWER, 6068HFG82

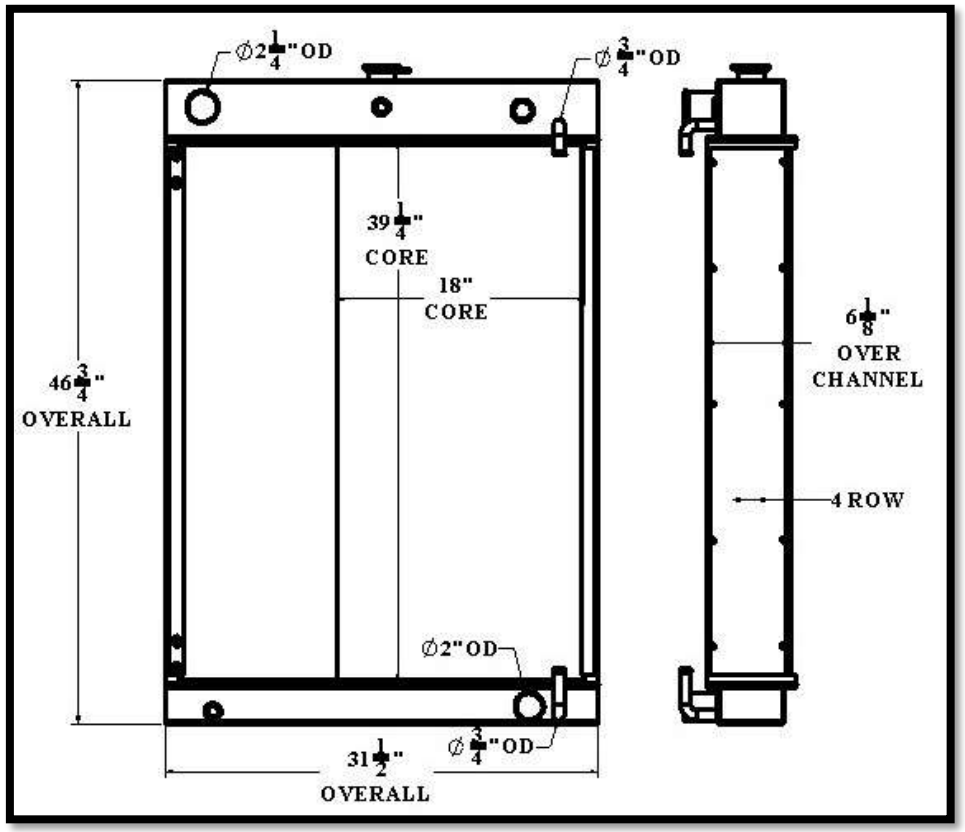

Overall Dimensions: 46-3/4” X 31-1/2” X 6-1/8”

Core: 39-1/4” X 18” X 4 ROW

Inlet: 2-1/4”OD, ¾”OD

Outlet: 2”OD, ¾”OD

Tel 1.800.774.2168

www.bgrradiator.com

BGR Part Number: BT-0294-5M

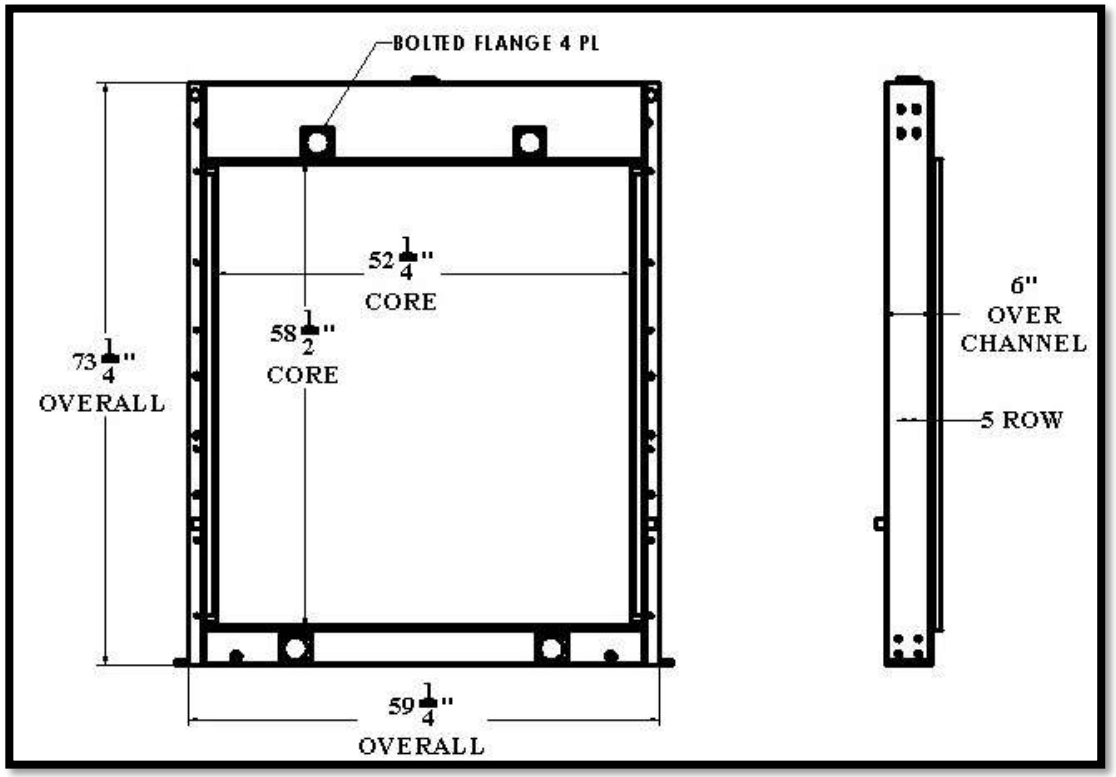

Overall Dimensions: 73-1/4” X 59-1/4” X 6”

Core: 58-1/2” X 52-1/4” X 5 ROW

Inlet: BOLTED FLANGE, 2PL

Outlet: BOLTED FLANGE, 2PL

Listed dimensions may vary slightly from OE

BGR Part Number: BT-0295-5M

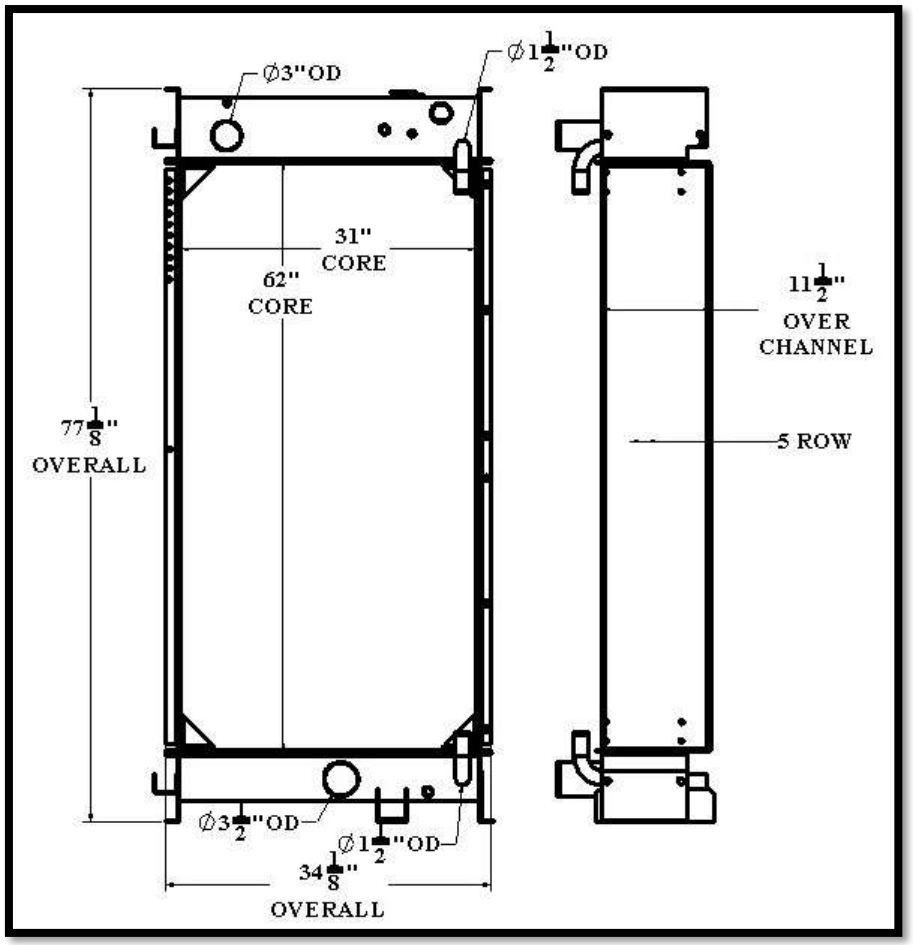

Overall Dimensions: 77-1/8” X 34-1/8” X 11-1/2”
Core: 62” X 31” X 5 ROW
Inlet: 3”OD, 1-1/2”OD
Outlet: 3-1/2”OD, 1-1/2”OD

Tel 1.800.774.2168
www.bgrradiator.com

BGR Part Number: BT-0296-10CAC

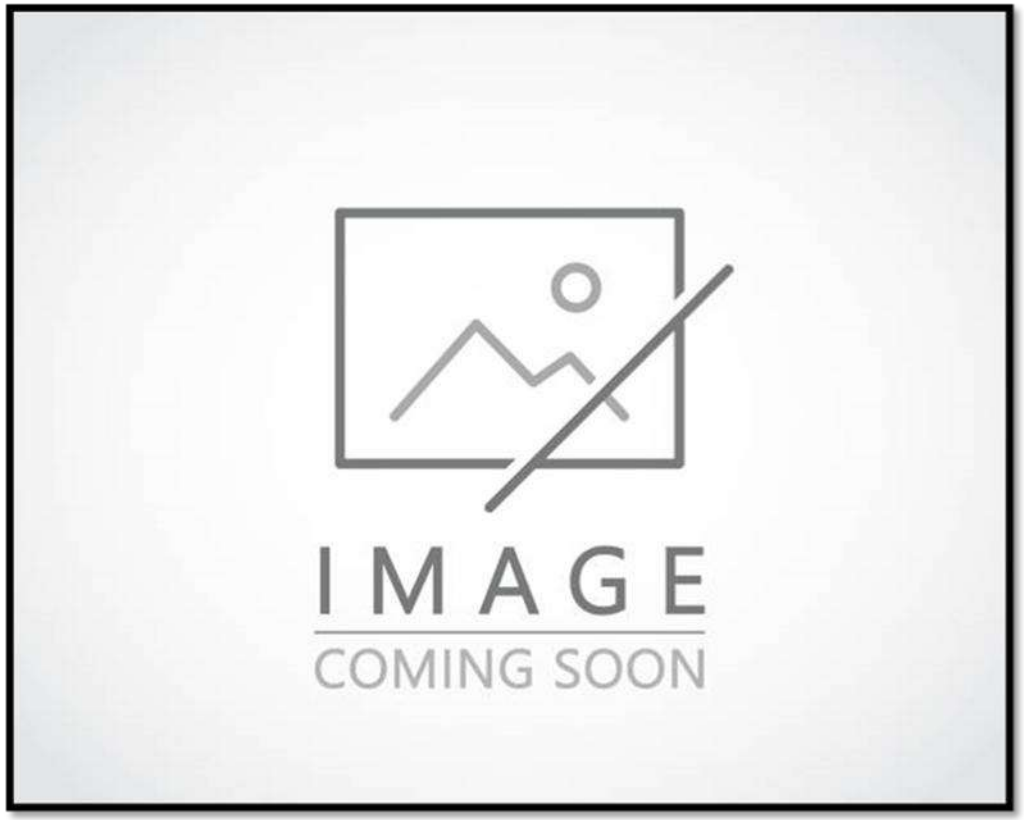

Overall Dimensions:
Core:
Inlet:
Outlet:

BT295

Listed dimensions may vary slightly from OE

BT296

BGR Part Number: BT-0297-6M

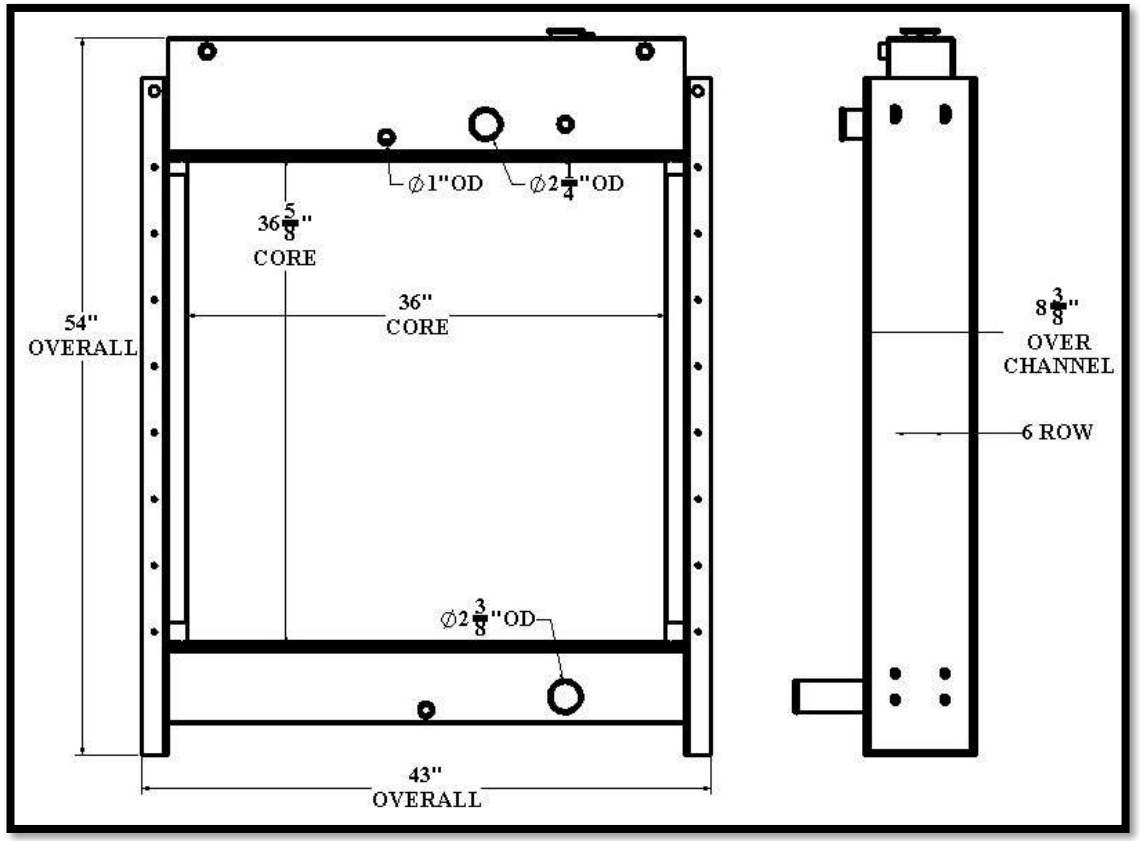

Overall Dimensions: 54” X 43” X 8-3/8”
Core: 36-5/8” X 36” X 6 ROW
Inlet: 2-1/4”OD, 1”OD
Outlet: 2-3/8”OD

Tel 1.800.774.2168
www.bgrradiator.com

BGR Part Number: BT-0298

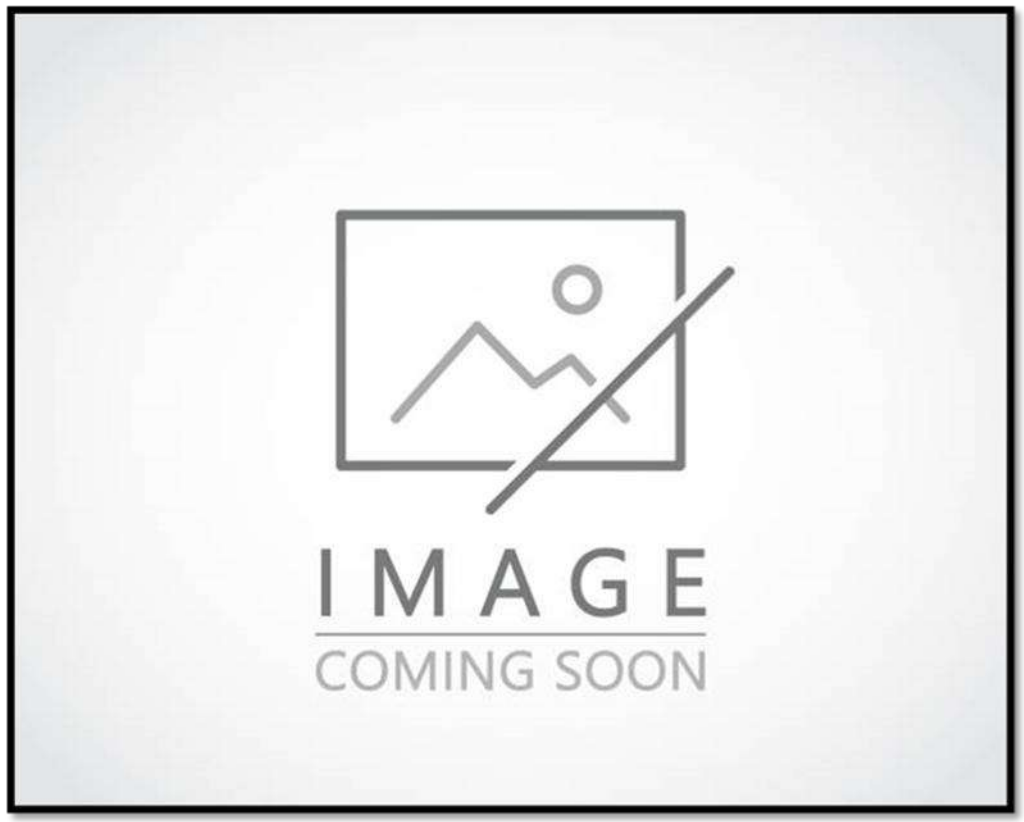

Overall Dimensions:
Core:
Inlet:
Outlet:

Listed dimensions may vary slightly from OE

BGR Part Number: BT-0299-6I5I

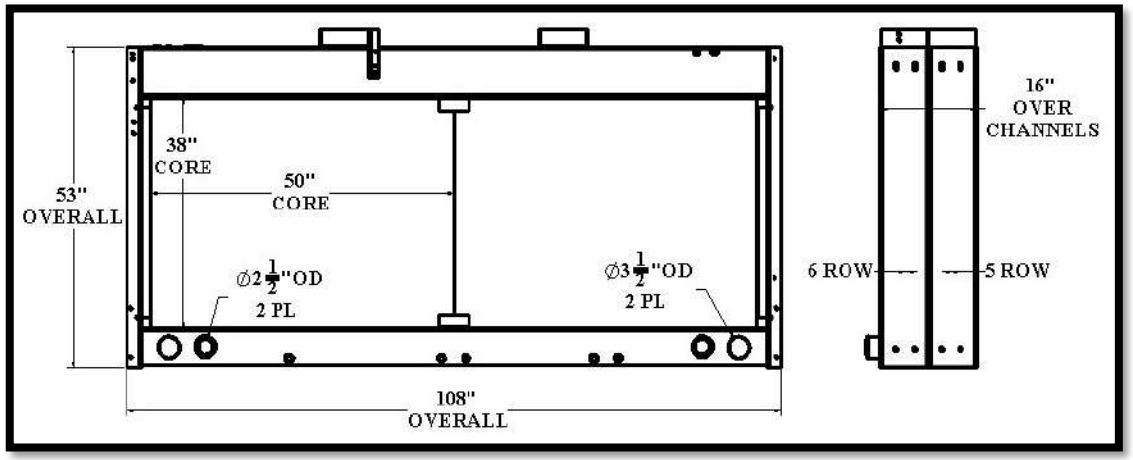

Overall Dimensions: 53” x 108” x 16”
JW Core: 38” x 50” x 5 row
JW Inlet/Outlet: 2-1/2”OD
AC Core: 38” x 50” x 6 row
AC Inlet/Outlet: 3-1/2”OD

BT299

Tel 1.800.774.2168
www.bgrradiator.com

BGR Part Number: BT-0300-6I5I

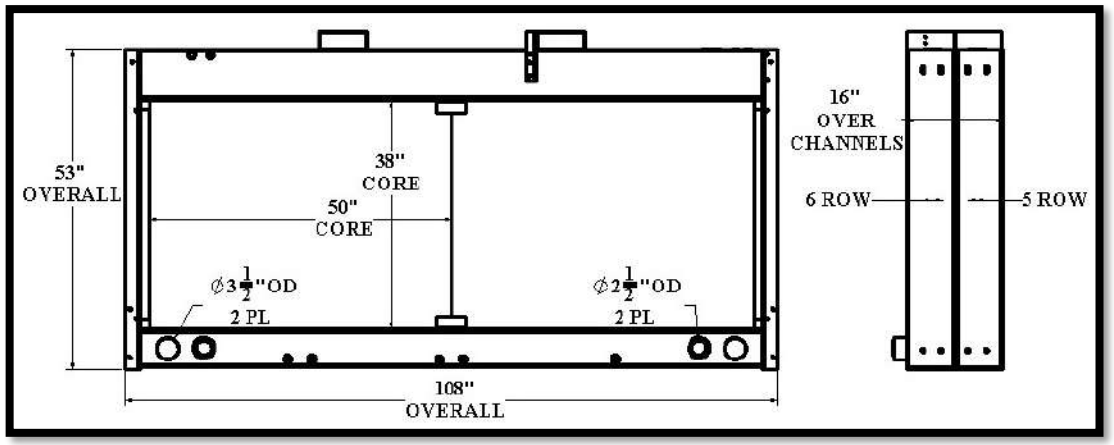

Overall Dimensions: 53” x 108” x 16”
JW Core: 38” x 50” x 5 row
JW Inlet/Outlet: 2-1/2”OD
AC Core: 38” x 50” x 6 row
AC Inlet/Outlet: 3-1/2”OD

BT300

Listed dimensions may vary slightly from OE

BGR Part Number: BT-0301-7M

GTI2446A

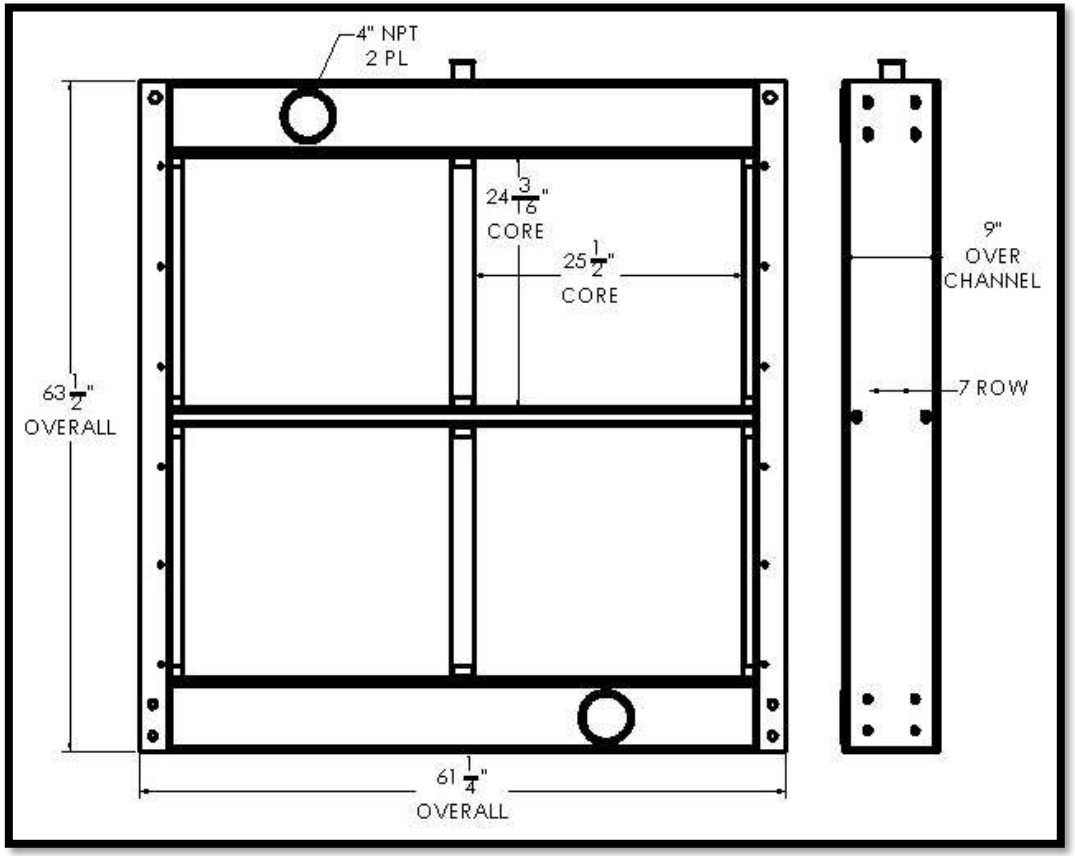

Overall Dimensions: 63-1/2” X 61-1/4” X 9”

Core: 24-3/16” X 25-1/2” X 7 ROW

Inlet: 4” NPT

Outlet: 4” NPT

Tel 1.800.774.2168
www.bgrradiator.com

BGR Part Number: BT-0302

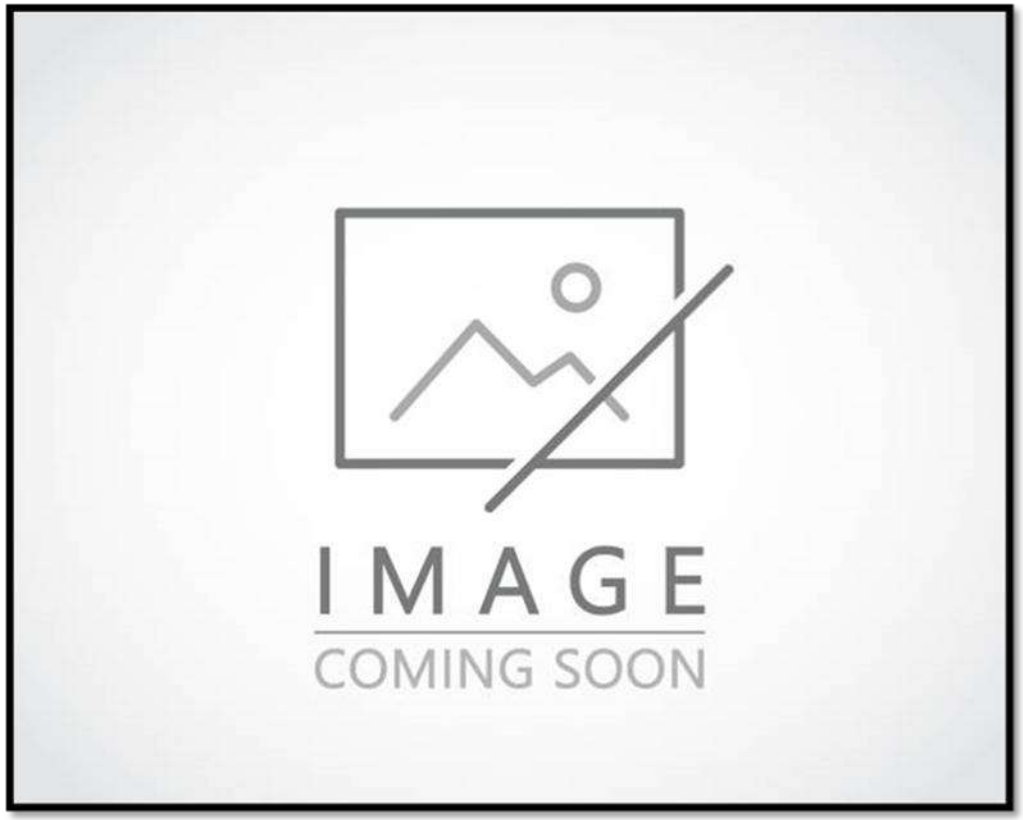

Overall Dimensions:

Core:

Inlet:

Outlet:

Listed dimensions may vary slightly from OE

BGR Part Number: CRH-20-6
OEM:

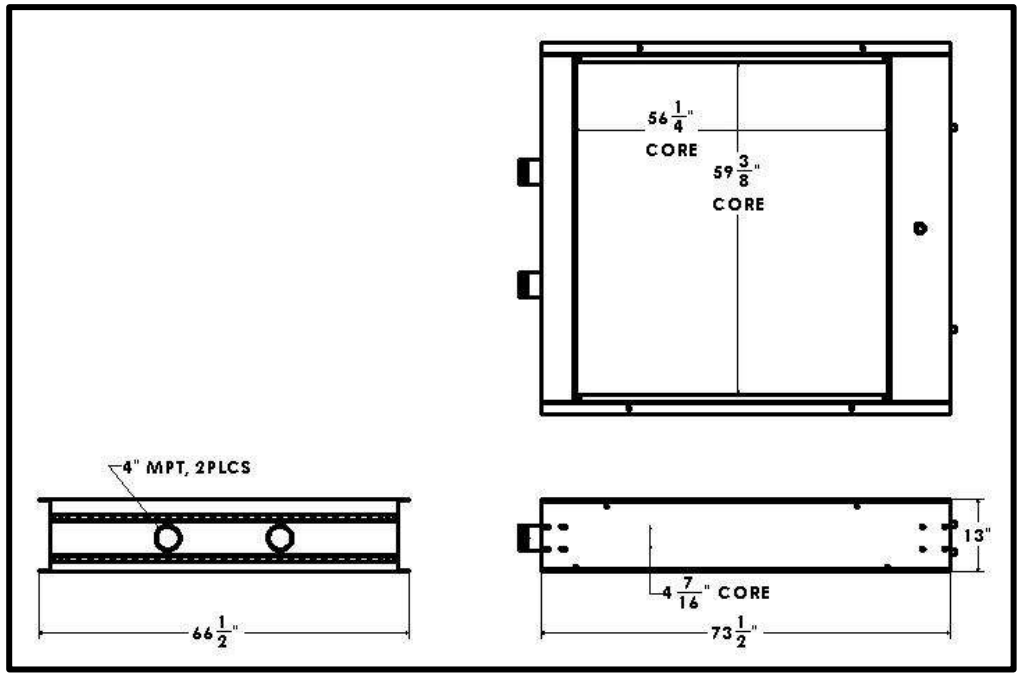

Overall Dimensions : 73-1/2” X 66-1/2” X 13”
Core: 56-1/4” X 59-3/8” X 8 Row
Inlet: 4” MPT
Outlet: 4” MPT

Tel 1.800.774.2168
www.bgrradiator.com

BGR Part Number: CRH-25-8
OEM:

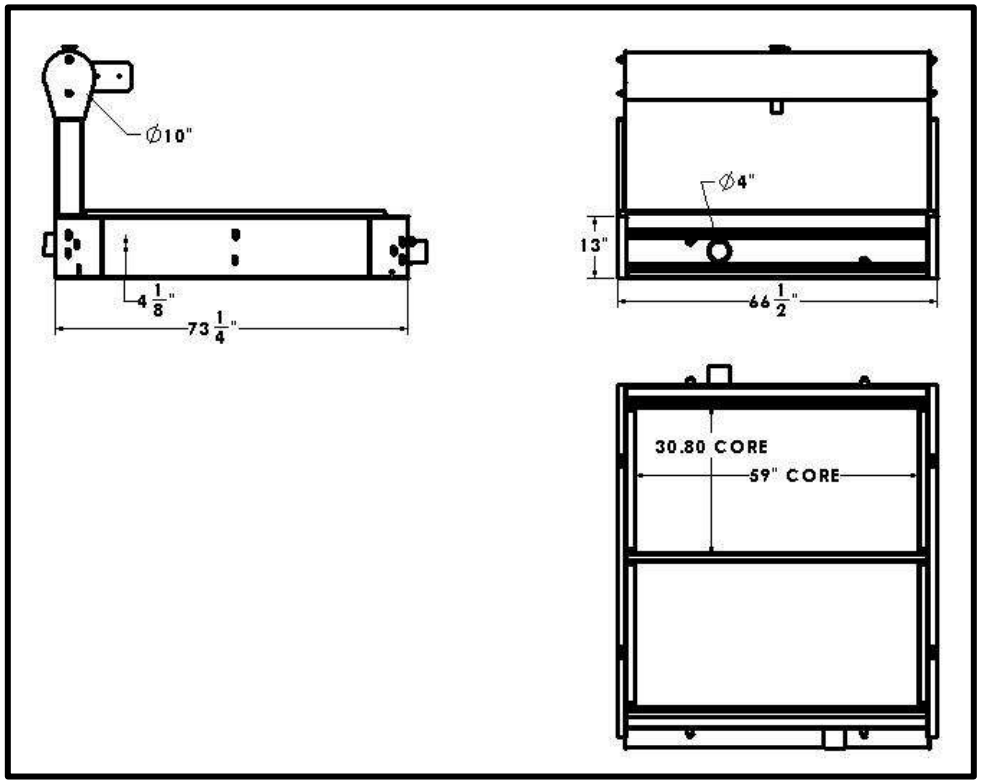

OVERALL DIMENSIONS: 73-1/4” X 66-1/2” X 13”
CORE: 2 Cores at 59” X 30-13/16” X 8 ROW
Inlet: 4” OD
Outlet: 4” OD

CR1

Listed dimensions may vary slightly from OE

CR2

BGR Part Number: CRH-50-4RT-3-6

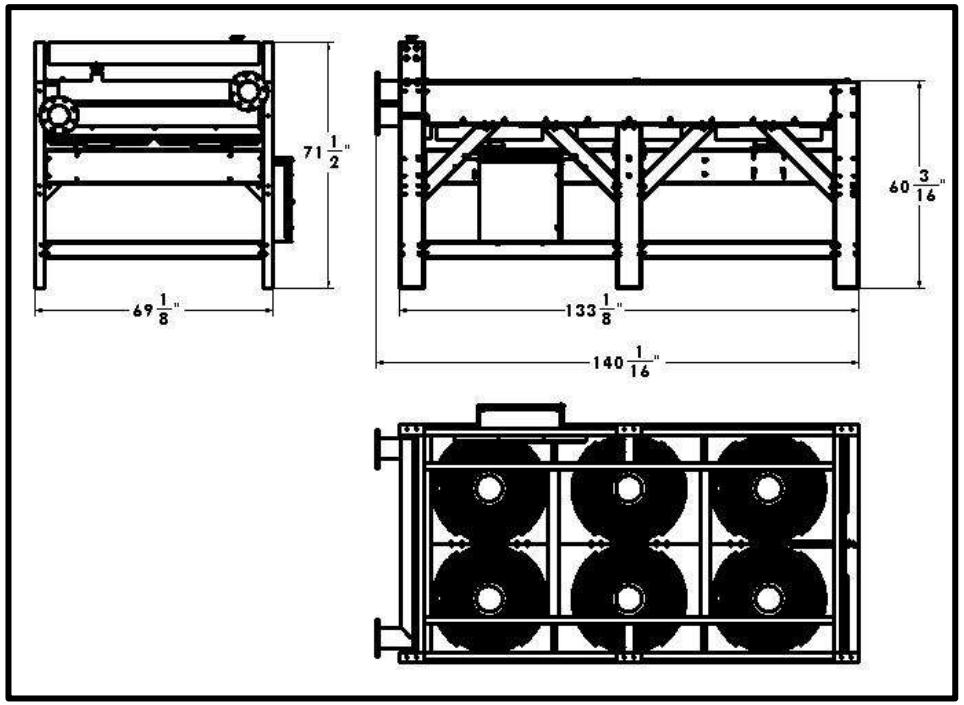

Overall Dimensions : 133-1/8” X 69-1/8” X 60-3/16”
Core: 4 Row 5/8” OD Copper Tube, Aluminum Fin 2 Pass
Inlet: 6” Flange
Outlet: 6” Flange

Tel 1.800.774.2168
www.bgrradiator.com

BGR RADIATOR

Listed dimensions may vary slightly from OE

DIMENSION SHEET FOR QUOTE

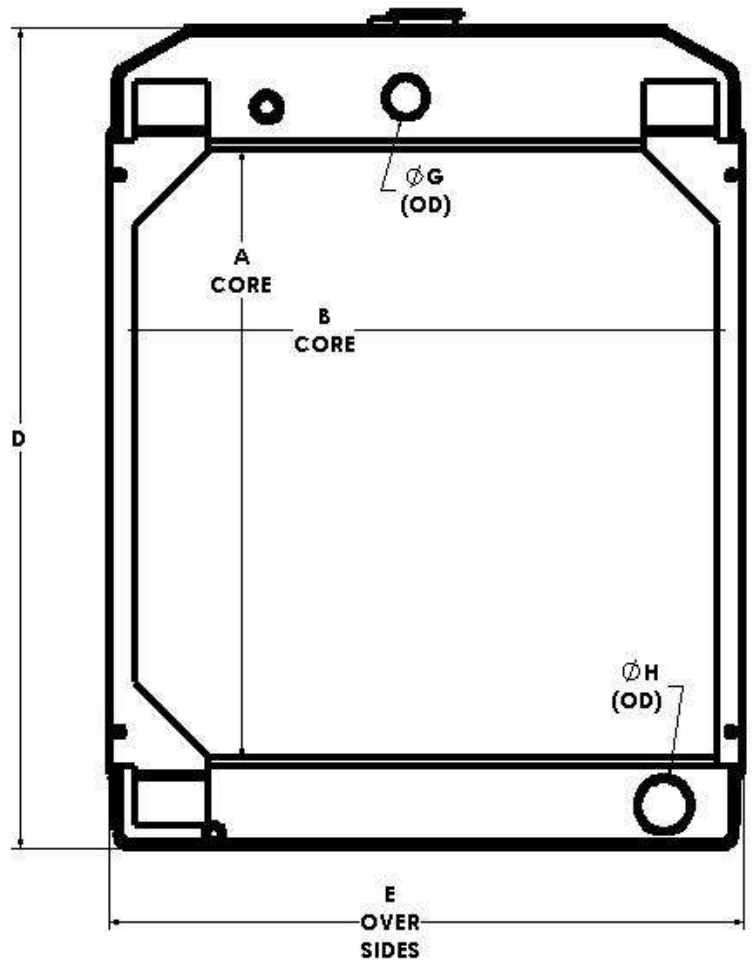

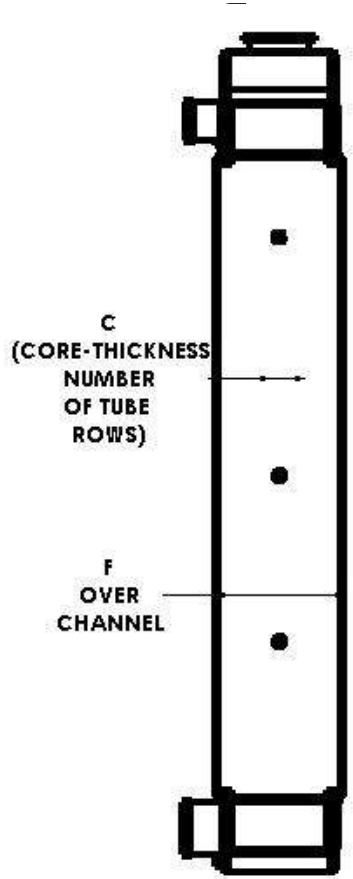

A	
B	
C	
D	
E	
F	
G	
H	
CAP PRESSURE	
FPI	

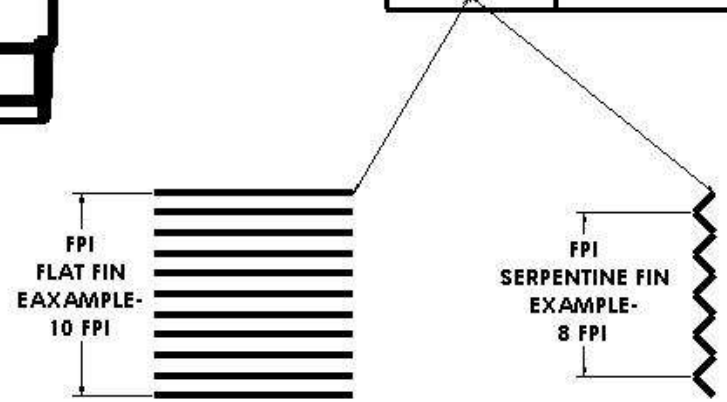

DIMSHEET